Conf-9205183--1

EMO-SA--5005

DE92 015071

WASTE MANAGEMENT ISSUES AT U.S. AIR FORCE BASES

J. M. Doesburg

May 1992

Presented at the
Institute for International Research Waste
Management Conference
May 18, 1992
Auckland, New Zealand

JUN 0 9 1992

Work supported by
the U.S. Department of Energy
under Contract DE-AC06-76RLO 1830

Environmental Management Operations
Pacific Northwest Laboratory
Richland, Washington 99352

MASTER

DISTRIBUTION OF THIS DOCUMENT IS UNLIMITED

DISCLAIMER

This report was prepared as an account of work sponsored by an agency of the United States Government. Neither the United States Government nor any agency thereof, nor any of their employees, makes any warranty, express or implied, or assumes any legal liability or responsibility for the accuracy, completeness, or usefulness of any information, apparatus, product, or process disclosed, or represents that its use would not infringe privately owned rights. Reference herein to any specific commercial product, process, or service by trade name, trademark, manufacturer, or otherwise does not necessarily constitute or imply its endorsement, recommendation, or favoring by the United States Government or any agency thereof. The views and opinions of authors expressed herein do not necessarily state or reflect those of the United States Government or any agency thereof.

Waste Management Issues at U.S. Air Force Bases

Introduction

Air Force installations are industrial bases for projecting men and machinery around the globe. Supporting this mission typically requires large quantities of stockpiled potentially hazardous materials. Over the past several decades, spills, poor accounting, mis-handling, and lack of understanding have led to discharges of hazardous substances into the environment.

The Installation Restoration Program (IRP) is a Department of Defense directed program aimed at remediating discharges of hazardous substances, POL (petroleum, oil, and lubricants), and solid waste disposal at defense installations. The IRP is broader in scope than even the U.S. EPA Comprehensive Environmental Response, Compensation and Liability Act (CERCLA), and requires the Air Force managers to integrate their programs with a broad range of regulations (see Table 1 below). Managing the wastes generated by the remediation program is one of the unexpected problems the Air Force has faced in their remediation efforts.

Background

There are currently over 1,200 sites on the U.S. Superfund National Priorities List (NPL) of hazardous waste sites, and there are over 30,000 sites on the Comprehensive Environmental Response, Compensation and Liability Information System (CERCLIS) list of candidate sites. The General Accounting Office, the U.S. government auditing arm, has estimated that the CERCLIS could contain an additional 368,000 sites if a more comprehensive inventory were performed. There are even more sites that are candidates for cleanup if the Department of Energy and Department of Defense were to perform comprehensive inventories of candidate sites. This impressive list of potentially contaminated sites can be contrasted with the 63 sites that the EPA has declared completed to date. It is clear that some alternatives must be developed that will allow more rapid cleanup of existing sites.

The traditional approach to remediating sites in the U.S. has been to remove the material and place it in a secure landfill, or in the case of groundwater, to pump and treat the effluent. These technologies have proven to be very expensive and don't really fix the problem. The waste is just moved from one place to another. Moreover, these policies ignore a fundamental technology available to today's environmental managers: *waste minimization*.

Regulatory Background

The U.S. regulations designed to protect the environment were first enacted in 1963 with the passage of the Clean Air Act. Over the ensuing decades, other regulations were passed controlling waste disposal activities, toxic substances, pesticides, and a myriad of other specific concerns. Table 1 lists the more prominent regulations enacted in the U.S. in the past three decades.

Table 1. Major U.S. Regulations

Clean Air Act (1963)
Resource Recovery Act (1970)
Federal Water Pollution Control Act (1972)
Amendments to the Clean Air Act (1970, 1977, 1991)
Resource Conservation and Recovery Act (1976)
Toxic Substances Control Act (1976)
Occupation Safety and Health Act (1976)
Clean Water Act Amendments (1977 - 1990)
Comprehensive Environmental Response, Compensation and Liability Act (1980)
Hazardous and Solid Waste Amendments (1984)
National Emission Standards for Hazardous Air Pollutants (1970/1977)
Superfund Amendments and Reauthorization Act (1986)

Such an impressive list of regulations shows an enduring interest in the environment, yet there has been an apparent lack of progress in remediation. In response, U.S. agencies have begun to undertake the effort to find better, faster, less expensive ways to remediate contamination from hazardous waste. One of these means of reducing the expense of remediation is, when possible, to reduce the volume of material to be treated.

Waste Minimization

Waste minimization can take many forms. Reuse and recycling are considered by many to be the most successful method of waste minimization. Other argue that source prevention is clearly the best way to minimize waste. While the nuances of the various terms may not appear important at first glance, they take on added meaning when used in the U.S. regulatory arena. For example, the Pollution Prevention Act clearly excludes recycling as an option and certain types of recycling facilities are also excluded from some Resource Conservation and Recovery Act (RCRA) requirements.

Recycling covers a broad range of activities. Virtually anything can be recycled, given the proper economic incentive. The most obvious recycling effort in the U.S. is aluminum. Waste centers throughout the country collect billions of aluminum cans each year. Glass, paper, cardboard, plastic, and even soiled nappies have been recycled. Industrial recycling includes a broad range of materials including solvents, virtually any metal, petroleum products, paints, even heat.

Source prevention is clearly another method that can be used to reduce waste. The Air Force is currently examining the use of biodegradable solvents and cleaners as replacement for the halogenated and hydrocarbon-based cleaners. Reusable plastic bends as a air blasting media has proven to be successful. This is also true for some of the exotic lubricants that are currently being used in jet engines. Several companies are developing mercury-free batteries as a means of reducing the estimated 170 tons of mercury currently being disposed of in landfills from old batteries. IBM is working on developing aqueous and ultrasonic methods for reducing the wastes from their parts-cleaning operations.

An unexpected waste management problem has arisen from the remediation industry. Many of the remediation technologies currently being used today create waste streams. Soils that

are contaminated with petroleum hydrocarbons or solvents are typically treated with a physical or chemical process that removes the contamination from the soil and transfers it to another medium, typically water or air. In theory, the waste water or air is easier to treat, further reducing the volume of contaminated material.

Overview of Existing Remediation Technologies (Alternative Technologies)

The following discussion of existing remediation technologies provides some illumination on the problem of wastes created during environmental remediation efforts. Virtually every technology in use today creates a waste stream that requires further treatment. Many of the technologies simply transfer the waste from one media to another. For example, washing contamination from soil cleans the soil, but results in contaminated water and air. Each of the broad categories of remediation techniques is discussed, with some of the more prominent waste streams identified.

Traditional Approach to Remediation

The most common method of disposing of solid waste in the U.S. during the early 1980's was to excavate, transport, and dispose of the material in a landfill. The most common water treatment technology was to pump and treat. These methods have been applied successfully at a number of sites, but their cost removal efficiency and the fact that the contamination, is not permanently eliminated has made alternative technologies attractive. In the U.S., the liability for contamination stays with the generator, regardless of where it resides, making disposal one of the least attractive options.

Alternative Technologies

Alternatives to the traditional technologies have been promoted aggressively by the U.S. Environmental Protection Agency (EPA). Superfund Amendments and Reauthorization Act (SARA)(1986) contained provisions to encourage permanent solutions (treatment vs. disposal) to hazardous waste problems.

Alternative technologies have widespread, full-scale use throughout the U.S. These technologies are considered "alternatives" because they are alternatives to landfill disposal. The most commonly used alternative technologies are incineration and solidification/stabilization. A recent (September 1991) EPA listing of established alternative remediation technologies included

- on site incineration
- off site incineration
- solidification/stabilization, and
- other (soil aeration, chemical neutralization).

These technologies have been described in some detail in various reports and are well-documented methods of treatment.

Innovative Technologies

Innovative technologies are those that are not in common use and where there is a paucity of data on the full-scale applications. These technologies include

- ex-situ bioremediation
- in-situ bioremediation
- chemical treatment
- in-situ flushing
- in-situ vitrification
- soil washing
- solvent extraction
- thermal desorption, and
- vacuum extraction

Bioremediation

Ex-situ and in-situ bioremediation rely on microbial organisms to breakdown and detoxify organic compounds. Ex-situ systems for water are established in a manner very similar to waste-water treatment systems, which enables the engineer to control many of the design parameters. Other types of ex-situ systems include landfarming and composting. In-situ systems are dependent on the natural conditions and the design engineer's options are limited to some extent.

Most organic compounds are biodegradable and can serve as a carbon and energy source for microbial growth, even if they possess toxic properties. Strains of bacteria have even been identified that can resist the effects of many toxic compounds. Of course these specialized bacteria present unique problems. For example, if the concentration of the compound they are designed to destroy is less than the design level, it may be necessary to reduce the specific enzymes needed to degrade the compounds.

Bioremediation progresses by three mechanisms, fermentation, anaerobic respiration, and aerobic respiration. Fermentation is a slower process than respiration, and aerobic respiration appears to be used more often than anaerobic.

There are six primary parameters that affect the bioremediation process:

- oxygen
- temperature
- concentration of inhibitory or toxic compounds
- Ph
- pressure, and
- type and concentration of inorganic nutrients.

The type of the substrate, the specific microbes and overall system design will affect the process as well.

Bioremediation is one of the more popular treatment technologies being tested in the U.S. There have been many notable successes in the private sector that have not been included in EPA's list of sites. In particular, this technology has shown great promise in the treatment of soils contaminated from leaking underground petrol tanks. There are, however, problems

associated with the misapplication of the technology. Soils must have the proper mix of the parameters described above, and that mix is not always intuitively obvious. Many attempts at remediation have been foiled by a lack of oxygen in the system, especially with the in-situ systems. Often these systems take considerable time to reach an acceptable cleanup standard. This may create problems with a regulatory agency and could be a source of concern when dealing with an environmentally sensitive area.

The waste streams associated with bioremediation are often relatively innocuous. The bacteria break the wastes into biomass, carbon dioxide and water. In some instances, especially with the halogenated compounds, wastes can include hazardous materials such as vinyl chloride.

Chemical Treatment

Chemical treatment systems can also be either ex-situ or in-situ. The primary processes are precipitation and oxidation/reduction. Precipitation is often used to remove metals from groundwater with metals being removed as metal hydroxides, carbonates, or sulfides. This process is widely used in above-ground systems. In-situ systems can treat contamination by precipitation, oxidation/reduction, and polymerization.

This process has several drawbacks: costs can be high compared to other methods; the in-situ systems may provide spotty treatment in areas where the soils are inhomogeneous; the waste products from the system may require further treatment.

The waste stream from an in-situ process is the fixed material. In some instances in the U.S., the fixed material is still regarded as hazardous and requires further handling, often disposal in landfills. The ex-situ processes typically include a water stream that requires treatment as well as any filtered sludges.

EPA lists 5 sites where chemical treatment is being applied. Contaminants being treated include carbon disulfide, chromium, arsenic, cyanide, and pesticides.

In-situ Flushing

This system is quite similar to that required in many in-situ bioremediation efforts. In this case, an injection gallery and a withdrawal gallery are established to flush water and additives through the soil. Surfactants, nutrients, Ph modifiers, and other additives are injected to wash contamination from the soil. This technique is particularly effective in systems where the substrate is homogeneous and isotropic. Channelization of flow and contaminant retention in the fine material are common problems.

The waste stream from in-situ flushing is the liquid (usually water) extracted from the ground that needs to be treated prior to reinjection. The wastes typically include off gases, sludges, and contaminated water.

EPA lists 12 sites where in-situ flushing is being demonstrated. Contaminants being treated include VOCs, semi-volatile organic compounds (SVOCs), polychlorinated biphenyl (PCBs), PAHs, and metals.

In-situ Vitrification (ISV)

This system is a thermal treatment process. Electrodes are placed into the soil; a starter path of graphite and glass frit is laid between the electrodes; and an electrical current is applied. The soil is melted around the electrodes, reaching a temperature of over 1600°C. The soil continues to melt until a point of diminishing returns. Soil can be vitrified to a depth of 30 feet.

There are several uncertainties about this process. The process will create large volumes of off gasses that have to be collected and treated before release. In some trial tests, the melt has "burped" some of these gasses, causing the molten soil to splash onto the off-gas collection system and destroy it. The cost for remediation can be quite high---as much as $1,200 US per ton. Other questions about the behavior of contaminants in the melt have yet to be addressed. Nevertheless, this system is being tested because it holds much promise for sites where other methods would be ineffective.

Off gases from the melt are the major waste stream from the ISV process. Materials collected in the hood include water vapor, organic material pyrolysis products, and soil decomposition products. These materials are usually collected in a quencher/scrubber, a HEPA filter, and an activated carbon filter.

EPA lists 8 sites where in-situ vitrification is being demonstrated. Contaminants being treated include VOCs, dioxin, pesticides, mercury, and various other metals.

Soil Washing

Soil washing is a physical separations process that can be used in a number of ways. In some instances, soil washing can be used with a secondary treatment of the waste stream to remediate a site. This is true where the physical properties of the contaminants and soil are sufficiently different that a washing or screening can separate them. More often, however, soil washing can be used to reduce the volume of material that has to be submitted to a secondary process. Studies have shown that much of the contamination in soil will be tightly bound onto the finer fraction. The coarse fraction of soil can be removed by washing prior to a secondary treatment.
Problems associated with soil washing include disposal of the wash water, cost of mobilization of the equipment, complications with treating a finer material in the secondary treatment process, and disposal of the coarser fraction.

The waste streams associated with soil washing can include wash water and the additives used to deagglomerate the soil, the larger screened fraction of the soil, off gases from the washing fluids, and the finer fraction that typically contains a higher percentage of the original contamination.

EPA lists 17 sites where soil washing is being demonstrated. Contaminants being treated include VOCs, various metals, SVOCs, pesticides, dioxins, and PAHs.

Solvent Extraction

Solvent extraction technologies are based on the ability of various solvents to breakdown the bonds between organic contaminants, solids, and water. The systems use a variety of solvents such as secondary or tertiary amines or, in some cases, liquified gases. The solvents are mixed

with the wastes and, after an appropriate period of agitation, the solids are separated, the liquids decanted, and the solvents separated from the waste and water. The solvents can be recycled.

Some of the problems associated with these technologies are the inability to treat metals, reactivity with the organics, and possible inhibitors such as detergents in the waste. Waste streams include the sludges containing the original contamination, waste solvent, and gas.

EPA lists 7 sites where solvent extraction is being demonstrated. Contaminants being treated include PCBs, PAHs, VOCs, metals, and SVOCs.

Thermal Desorption

Thermal desorption processes include incineration, pyrolysis, and wet air oxidation. Contaminants are incinerated, releasing energy with a wide variety of off-gasses. Incineration is usually classified as low-temperature and high-temperature with off-gas- processing systems designed to treat the different products. Pyrolysis breaks down organics in an oxygen-deficient atmosphere, and wet-air oxidation breaks down organics in a high-temperature and high pressure environment. These technologies all have potentially hazardous waste streams. They are often used in conjunction with other treatment techniques.

The waste stream from thermal desorption includes the off gases from the thermally destroyed contaminants. These are often collected in a hood and treated prior to release to the atmosphere.

EPA lists 17 sites where thermal desorption is being demonstrated. Contaminants being treated include VOCs, PCBs, DDT, DDD, DDE, and SVOCs.

Vacuum Extraction

This is a robust technology that is being used throughout the U.S. The basic principle is to apply a vacuum to a well or a series of wells in a zone where the properties of the soil allow relatively free flow of air. The off-gases from the vacuum system are treated to remove liquids and then to treat the gas. These systems can be used in conjunction with bioremediation systems where air is a necessary additive to stimulate biological activity.

These systems can be used to remove contaminants with high vapor pressures. They have drawbacks in that they are ineffective in removing contamination bound in finer grained materials. Waste streams include the extracted liquid (contaminated water) and off gases.

EPA lists 51 sites where vacuum extraction is being demonstrated. Contaminants being treated include VOCs and SVOCs.

Technical Resources

There are several agencies specializing in waste minimization who provide information to the public. The Pollution Prevention Information Exchange System (PIES) lists nearly 600 case histories. The database is available to the public, free of charge, via computer modem at 1-703-506-1025. The American Institute for Pollution Prevention at the University of Cincinnati (phone 1-513-556-3693) is another center where case histories and technical information can be obtained. The Waste Reduction Institute for Training and Applications Research, an

independent non-profit group sponsored by EPA, offers a wide range of publications (Phone 1-612-379-5995).

Case Study of Waste Minimization at a U.S. Air Force Base

Recent efforts at Eielson Air Force Base (EAFB), located near Fairbanks, Alaska, offers an interesting example of deploying an innovative technology. EAFB is one of the northernmost defense facilities of the U.S. It comprises over 19,000 acres of relatively flat terrain in the Tanana River valley in the eastern central portion of interior Alaska. The base is approximately 25 miles southeast of Fairbanks and 100 miles south of the Arctic Circle. It is subjected to extreme climatic fluctuations with temperatures dropping below -60°F in winter and rising above 90°F in the summer. Remedial alternatives that can be economically deployed to this remote site and still withstand the rigors of winter are few.

EAFB is on top of alluvial sands and gravels that extend down approximately 100 feet to bedrock. These sands and gravels have been contaminated with petroleum hydrocarbons at many places throughout the base. The preliminary estimate of the volume of waste to be treated is greater than 1,000,000 cubic yards of material.

Previous attempts to remediate the soil were made using a low-temperature incineration process. This system proved to be expensive, with costs per cubic yard reaching $130. In addition, the system could only be operated during the summer months. The Air Force asked EMO to look into remediation alternatives that would be less expensive and more robust.

Environmental Management Operations and it's subcontractor, CH2M HILL, looked at a wide variety of innovative remediation alternatives that may be suitable for a cold-weather environment. The various criteria used to select the technology included

- effectiveness in remediating petroleum compounds
- expected cost of remediation
- ability to deploy technology in a short time, and
- ability to withstand the local climate.

The options that met these criteria range from land farming to incineration to in-situ bioremediation. Various options have been examined, but the basic conclusion is that the cost for remediating this base will be extremely high. The Air Force commissioned Battelle to help find a means to reduce the volume of material to be treated.

Soil washing was quickly identified as an applicable technology for reducing the volume of contaminated soils at Eielson. Soil washing encompasses a variety of soil-treatment systems that employ physical/chemical process to remove contaminants from soil. The simplest soil-washing applications achieve volume reduction through particle size segregation, using conventional mining ore processing equipment. The principle behind this technique is that most of the contamination will adhere to the smaller particle sizes.

Figure 1 and Figure 2 are schematics of some of the conventional equipment used to "wash" soils. The basic process is one in which the soil is deagglomerated, scrubbed, and separated. A double deck wet screen and spiral classifier are shown in Figure 1. This type of equipment is used primarily to separate the material, but it also provides a deagglomeration

TYPICAL SOIL WASHING EQUIPMENT

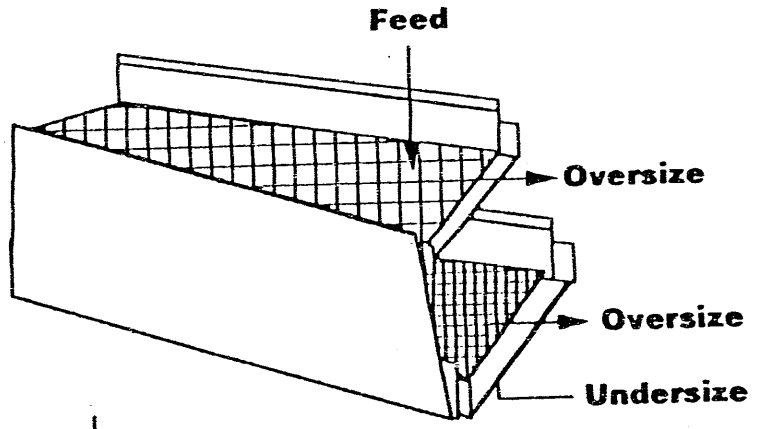

DOUBLE DECK SCREEN

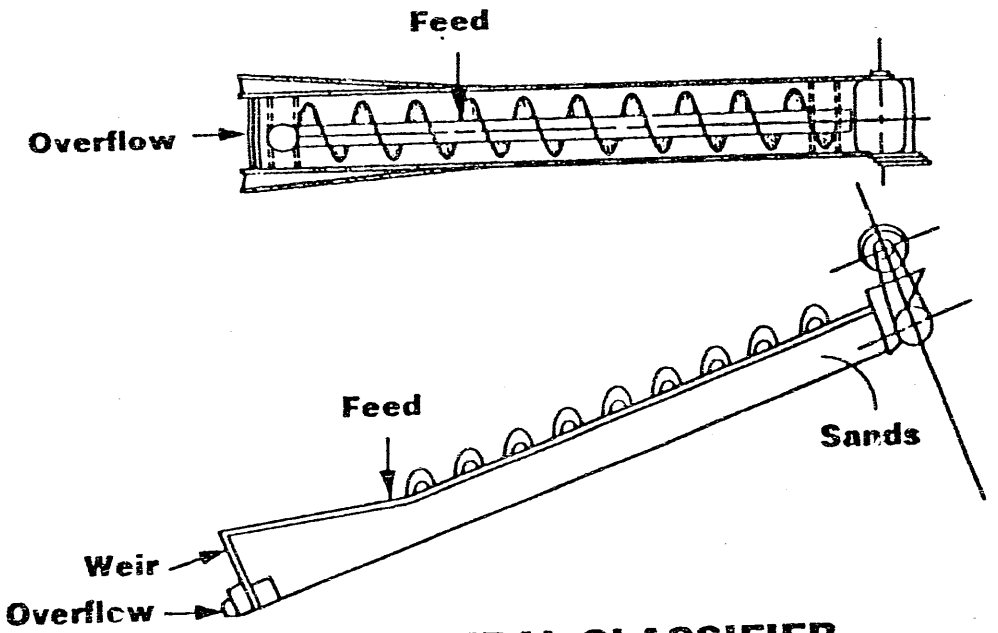

SPIRAL CLASSIFIER

TYPICAL SOIL WASHING EQUIPMENT (CONTINUED)

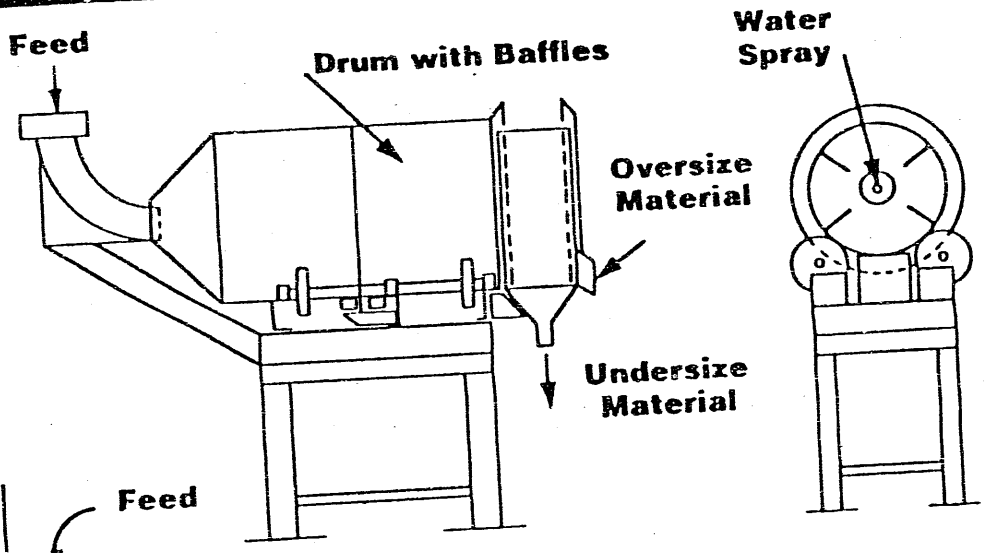

TROMMEL SCRUBBER

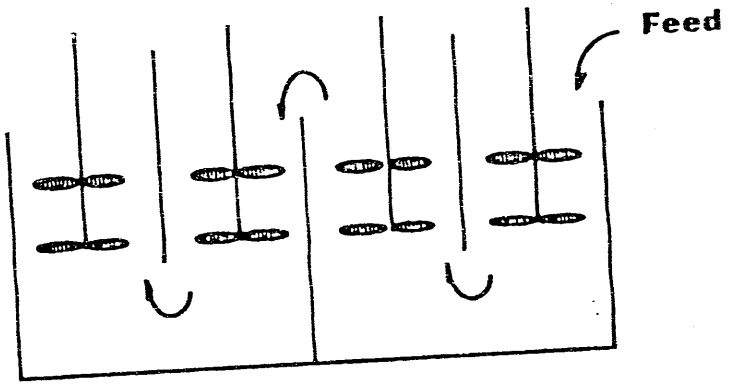

4 STAGE ATTRITION SCRUBBER

and scrubbing action as well. A trommel and attrition scrubber are presented in Figure 2. These techniques provide more energy to deagglomerate and scrub the soil. Attrition scrubbing provides the most intensive scrubbing action.

Soil-washing bench-scale tests were performed on EAFB soils to evaluate cleanup levels achievable in the coarse fraction, to select a cost effective soil washing process for Phase II testing, and to characterize the residual streams. The bench scale tests were conducted such that they mimicked the processes described above. Figure 3 shows the testing flow-path followed in the investigation.

The results of the bench-scale tests indicate that several soil-washing processes may reduce the levels of petroleum hydrocarbons in the coarse fraction to less than 100 parts per million (ppm), which is one of the action levels for petroleum-contaminated soil in Alaska. In addition, the volume of material that would require further treatment could be reduced by approximately 60 to 95 percent.

The waste minimization efforts at Eielson Air Force Base are continuing. Soil washing will be used in the coming field season to reduce the volume of material going into an incinerator and into a composting cell. Other efforts to reduce the volume of groundwater to be treated are being planned. It is expected that, as remediation technologies mature, more effort will be directed to make the remediation as efficient as possible.

SOIL WASHING BENCH SCALE TESTING FLOW PATH

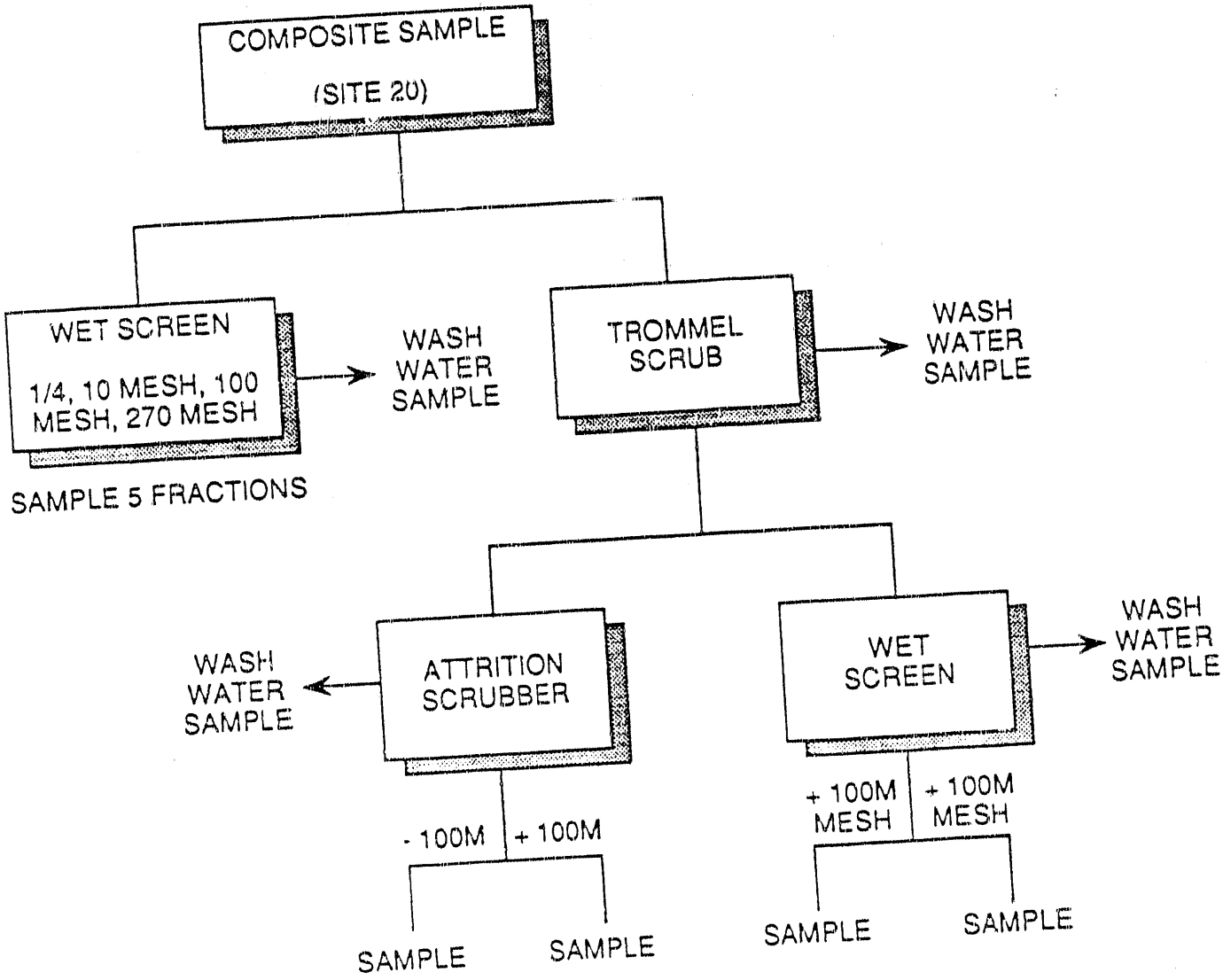

END

DATE FILMED

7/28/92