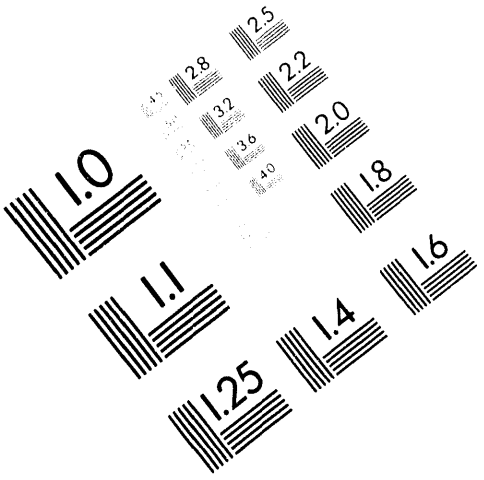

Association for Information and Image Management

1100 Wayne Avenue, Suite 1100
Silver Spring, Maryland 20910

301/587-8202

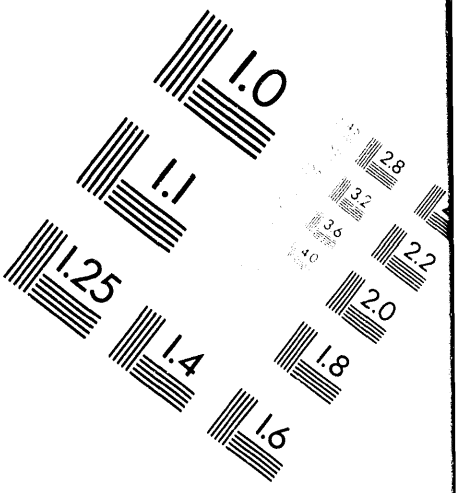

Centimeter

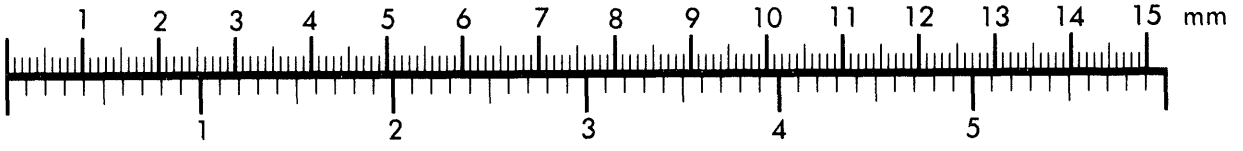

Inches

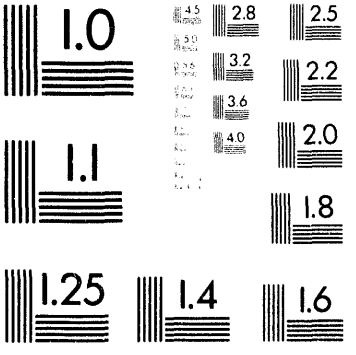

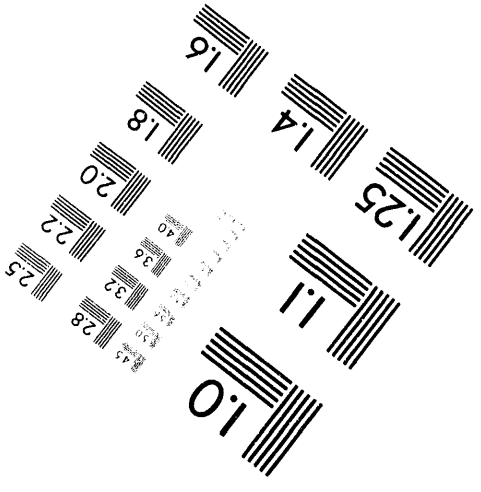

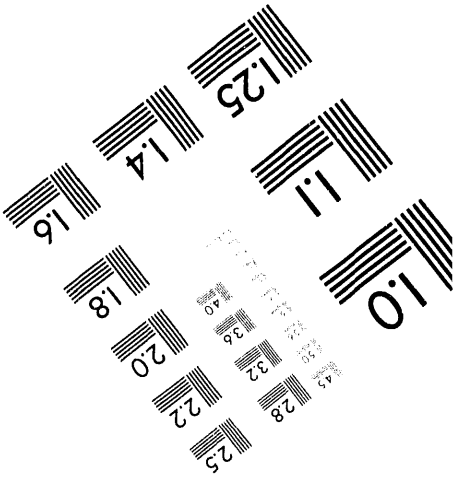

MANUFACTURED TO AIIM STANDARDS
BY APPLIED IMAGE, INC.

1 of 1

12
5-27-94 JSO

PNL-9443
UC-350

Implementation Plan for Operating Alternatives for the Naval Computer and Telecommunications Station Cogeneration Facility at Naval Air Station North Island, San Diego, California

April 1994

Prepared for the U.S. Department of Energy
Federal Energy Management Program
under Contract DE-AC06-76RLO 1830

Pacific Northwest Laboratory
Operated for the U.S. Department of Energy
by Battelle Memorial Institute

Battelle

DISTRIBUTION OF THIS DOCUMENT IS UNLIMITED

DISCLAIMER

This report was prepared as an account of work sponsored by an agency of the United States Government. Neither the United States Government nor any agency thereof, nor Battelle Memorial Institute, nor any of their employees, makes any warranty, expressed or implied, or assumes any legal liability or responsibility for the accuracy, completeness, or usefulness of any information, apparatus, product, or process disclosed, or represents that its use would not infringe privately owned rights. Reference herein to any specific commercial product, process, or service by trade name, trademark, manufacturer, or otherwise does not necessarily constitute or imply its endorsement, recommendation, or favoring by the United States Government or any agency thereof, or Battelle Memorial Institute. The views and opinions of authors expressed herein do not necessarily state or reflect those of the United States Government or any agency thereof.

PACIFIC NORTHWEST LABORATORY
operated by
BATTELLE MEMORIAL INSTITUTE
for the
UNITED STATES DEPARTMENT OF ENERGY
under Contract DE-AC06-76RLO 1830

Printed in the United States of America

Available to DOE and DOE contractors from the
Office of Scientific and Technical Information, P.O. Box 62, Oak Ridge, TN 37831;
prices available from (615) 576-8401. FTS 626-8401.

Available to the public from the National Technical Information Service,
U.S. Department of Commerce, 5285 Port Royal Rd., Springfield, VA 22161.

The contents of this report were printed on recycled paper

PNL-9443
UC-350

Implementation Plan for Operating Alternatives for the Naval Computer and Telecommunications Station Cogeneration Facility at Naval Air Station North Island, San Diego, California

D. M. Carroll
S. A. Parker
D. J. Stucky

April 1994

Prepared for
the U.S. Department of Energy
Federal Energy Management Program
under Contract DE-AC06-76RLO 1830

Pacific Northwest Laboratory
Richland, Washington 99352

MASTER

Preface

The goal of the U.S. Department of Energy (DOE) Federal Energy Management Program (FEMP) is to facilitate energy efficiency improvements at federal facilities. This is accomplished by a balanced program of technology development, facility assessment, and use of cost-sharing procurement mechanisms. Technology development focuses upon the tools, software, and procedures used to identify and evaluate energy efficiency technologies and improvements. For facility assessment, FEMP provides metering equipment and trained analysts to federal agencies exhibiting a commitment to improve energy use efficiency. To assist in procurement of energy efficiency measures, FEMP helps federal agencies devise and implement performance contracting and utility demand-side management strategies.

Pacific Northwest Laboratory (PNL)[a] supports the FEMP mission of energy systems modernization. Under this charter, the Laboratory and its contractors work with federal facility energy managers to assess and implement energy efficiency improvements at federal facilities nationwide.

The SouthWestern Division of the Naval Facilities Engineering Command, in cooperation with FEMP, has tasked PNL with developing a plan for implementing recommended modifications to the Naval Computer and Telecommunications Station (NCTS) cogeneration plant at the Naval Air Station North Island (NASNI) in San Diego. That plan is detailed in this report.

(a) Pacific Northwest Laboratory is operated by Battelle Memorial Institute for the U.S. Department of Energy under Contract DE-AC06-76RLO 1830.

Executive Summary

The SouthWestern Division of the U.S. Navy's Naval Facilities Engineering Command tasked Pacific Northwest Laboratory (PNL) with developing a plan for implementing recommended modifications to the Naval Computer and Telecommunications Station (NCTS) San Diego cogeneration plant at Naval Air Station North Island (NASNI) in San Diego. The plan outlines the steps to be executed to achieve the operation goals identified in a previous engineering and economics study of the cogeneration plant at NCTS San Diego. The U.S. Navy's major concern is to provide reliable, cost-effective primary and backup electrical and thermal power to the NCTS facility. It should be noted that the loss of either power source results in a shutdown of the facility's computer operations.

Specific recommendations for achieving operation goals include the following:

- Energy Management and Control System

  - Retrofit or replace various isolation valves throughout the piping system with motorized valves; install required relays, conduit, and control cables to allow the existing energy management and control system (EMCS) to communicate with the newly motorized valves.

  - Install a pipe tap, isolation valve, and pressure sensor in the Public Works Center San Diego (PWCSD) steam feed line to allow the EMCS to sense a loss of steam pressure requiring activation of the engine/generator sets as a backup heat source.

  - Install control relays to allow the EMCS to start and stop operation of the chillers.

  - Install control relays to allow the EMCS to start and stop operation of the engines.

  - Install a modem in the NCTS workstation and a remote workstation at a location to be designated by PWCSD to allow for remote trouble reporting and system monitoring.

  - Reprogram the existing EMCS to allow for monitoring of plant performance, grid steam pressure, and steam/hot water heat exchanger performance with chiller/pump/cooling tower switching, engine startup, and remote alarm notification as needed.

  - Tie into the existing circuit breakers in the "T" and "NT" electrical distribution sections to allow control of the circuit breakers under emergency generator operation to match electrical load to generator capacity.

  - Install an uninterruptible power supply (UPS) at the NCTS EMCS and at the remote workstation to ensure continued EMCS operation in the event of loss of electrical power to the workstations.

- Engines

  - Replace the engine control and ignition package.

- Install electric jacket water heaters to maintain the engine blocks at the recommended temperature for reliable starting.

- Electricai Switchgear

  - Sequence the relays controlling the switchgear.

- Air Pollution Control District

  - Retain the services of a firm experienced in dealing with the local Air Pollution Control District (APCD) to gain the Emission Reduction Credits for banking or sale.

Contents

Preface iii

Executive Summary v

Abbreviations and Acronyms xi

1.0 Introduction 1.1

2.0 Issues 2.1

2.1 Modified Generator Scenarios 2.1

2.1.1 Scenario 14: Convert Plant to Emergency Generator Status 2.2

2.1.2 Scenario 20: Shave Peak Demand by Coordinating Maintenance Testing With SDG&E System Peak 2.2

2.1.3 Scenario 21: Utilize SDG&E Interruptible Rate Schedule LR 2.3

2.1.4 Scenario 22: Utilize SDG&E Interruptible Rate Schedule LR 2.5

2.1.5 Results 2.5

2.2 Thermal Plant Current Design 2.9

2.3 Electrical Plant Current Design 2.13

2.4 Proposed Operation 2.16

3.0 Modifications 3.1

3.1 Energy Management and Control System 3.1

3.2 Engine/Generator Plant 3.4

3.3 Electrical Switchgear 3.5

3.4 Air Pollution Control District 3.6

3.4.1 Switch From Cogeneration to Limited Operation 3.6

3.4.2 Bank Emission Reduction Credits 3.6

3.5 Operations and Maintenance Options 3.7

4.0 References 4.1

Figures

2.1 Chilled Water, Engine Heat Reclaim Water, and Steam Piping 2.11

2.2 Condenser Water and Cooling Tower Water Piping 2.12

2.3 Simplified Electrical Feeder Diagram - As Designed 2.14

2.4 Simplified Electrical Feeder Diagram - As Operated 2.15

3.1 Chilled Water, Engine Heat Reclaim Water, and Steam Piping Modifications 3.2

3.2 Condenser Water and Cooling Tower Water Piping 3.3

Tables

2.1 Demand Charge Rate Schedule Comparison 2.4

2.2 Analysis of Emergency Generator Scenarios 2.6

2.3 Current Chiller Plant Operation Modes 2.10

2.4 Modified Plant Operation Modes 2.17

3.1 Plant Operation and Maintenance Options 3.9

Abbreviations and Acronyms

AEI	Applied Energy Incorporated
APCD	Air Pollution Control District
BACT	best available control technology
BTU	British thermal unit
EMCS	energy management and control system
ERC	emission reduction credit
FEMP	Federal Energy Management Program
FERC	Federal Energy Regulatory Commission
HVAC	heating, ventilating, and air conditioning
kV	kilovolt
kW	kilowatt
kWh	kilowatt-hour
LAER	lowest achievable emission rate
NASNI	Naval Air Station North Island
NCTS	Naval Computer and Telecommunications Station
NT	nontechnical
O&M	operations and maintenance
ΔP	pressure differential
PNL	Pacific Northwest Laboratory
PWCSD	Public Works Center San Diego
RACT	reasonably available control technology
RFP	reasonable further progress
RPM	revolutions per minute
SDG&E	San Diego Gas & Electric
T	technical

1.0 Introduction

A cogeneration plant was included in the original design and construction of Building 1482, Naval Computer and Telecommunications Station (NCTS) San Diego, as part of Military Construction Project P-261 at the Naval Air Station North Island (NASNI) in 1986 (Gifford 1982). The U.S. Navy Public Works Center San Diego (PWCSD) manages, operates, and maintains the plant under a Memorandum of Understanding with NCTS. The cogeneration plant supplies NCTS with primary electrical power for one of its distribution buses and thermal power for the absorption chiller plant. Backup electrical power and power for the second distribution bus is provided by the PWCSD electrical grid supplied by San Diego Gas & Electric (SDG&E). The PWCSD steam grid, supplied by Applied Energy Incorporated (AEI), provides backup thermal power.

The cogeneration plant consists of four 650-kW Caterpillar engines with waste-heat recovery from the engine jacket, exhaust, and oil. The engines are operated as rich burn, using natural gas with a propane backup fuel supply. Hot water from the exhaust gas heat recovery boilers is used for cooling via three Carrier absorption chillers, reheat, and domestic hot water. Each of the engine exhausts is equipped with two catalytic converters in series to reduce emissions to acceptable levels.

Two engines can supply either all or most of the absorber load for one chiller, depending on the cooling load. If more absorber heat is needed, it is provided by the PWCSD steam loop through a steam/hot water heat exchanger. Three engines can supply the entire load of a single chiller with excess heat dumped to the cooling towers.

Since the plant was brought on-line, a new long-term steam contract has been signed with AEI, which operates several cogeneration sites for the U.S. Navy at San Diego. According to that contract, the U.S. Navy must purchase a minimum of 73 million pounds of steam per month. This amount is well above the maximum demand encountered during the three years in which the contract has been in place. Credit is applied to the bill for condensate returned. Credit is also given for electricity that is generated with excess steam.

The U.S. Navy has upgraded its electrical distribution system to receive power from SDG&E at 69 kV, enabling it to purchase power at the transmission rate with lower unit prices instead of the distribution rate they were previously on.

The Building 1482 electrical and cooling systems are currently not fully loaded because of the continuing miniaturization of computers. The ongoing consolidation of U.S. Navy Commands, however, is resulting in the transition of additional functions to NCTS San Diego. Ultimately, this consolidation will place additional demands on the electrical and thermal systems at Building 1482.

The SouthWestern Division of the Naval Facilities Engineering Command was commissioned by PWCSD to contract a study of the economic and engineering options for continuing to operate, replace, or discontinue NCTS cogeneration plant operation.

The study, performed by Pacific Northwest Laboratory (PNL) and documented in *Analysis of Operating Alternatives for the Naval Computer and Telecommunications Station Cogeneration Facility*

at Naval Air Station North Island, San Diego, California (Parker et al. 1993), evaluated the plant for the following:

1. IF the plant is economically feasible to operate, either full- or part-time, THEN what improvements can be made to optimize its operation?

2. IF the plant is not economical to operate, THEN what level of cost reduction is required to make it economical?

3. IF modifications can make the plant feasible to operate, THEN what specific steps must be taken to implement those modifications?

4. IF the plant cannot realistically be made feasible to operate, THEN what is the best option for providing backup electrical and thermal power to tenants?

The study evaluated the costs of plant operations and maintenance (O&M) under a wide variety of options. Options investigated included varying the daily time period the plant is operated and repairing or replacing the plant's engines. The study concluded that:

- The plant is not economical to operate because the O&M cost to man the plant to meet U.S. Navy specifications exceed the energy savings achieved by the plant.

- Labor costs would have to be reduced dramatically for the plant to be economical to operate by converting the plant to unmanned operation. Unmanned operation is unacceptable to PWCSD management because of the critical nature of the NCTS load.

- Question 3 is not applicable because the plant is not economical to operate.

- The electrical plant should be converted to operate as an emergency generator plant to provide power in the event of grid power loss and as a backup thermal source for the chiller plant in the event of grid steam loss. It was further recommended that the chiller plant be modified to allow for reliable, unmanned operation.

Plant conversion to unmanned operation will not only improve the economics of providing utility support to NCTS, but will free PWCSD maintenance manpower to perform other duties. Because of the cost to hire service contractors for functions the U.S. Navy does not have the manpower to perform, and the limitations on hiring additional personnel, the ability to transfer the billets will prove beneficial to the U.S. Navy.

This report contains three major sections. In Section 2.0, issues concerning the cogeneration plant's current design and the proposed modes of operation are reviewed. Modifications to the cogeneration and chiller plants required to implement the recommendations in the initial PNL report are outlined in Section 3.0 (Parker et al. 1993).

2.0 Issues

The major concern of PWCSD with regard to this cogeneration plant is to provide reliable, cost-effective primary and backup electrical and thermal power to NCTS. If either power source is lost, the facility's computer operations shut down. The electrical power source is backed up by an uninterruptible power supply sized for 15 minutes of operation. If cooling is lost, the computers must be shut down to prevent damage from overheating.

NCTS has two internal electrical power distribution buses -- technical (T) and nontechnical (NT). Currently, the cogeneration plant provides primary electrical power for the NT bus and thermal energy for the heating, ventilating, and air-conditioning (HVAC) system and domestic hot water. Power generated by the cogeneration plant beyond that needed by the NT bus is fed back out to the PWCSD grid. The PWCSD electrical grid provides primary power for the T bus.

Under the recommended option, the PWCSD electrical distribution grid will supply primary electrical power and the PWCSD steam grid will supply primary thermal power. Backup power will come from the existing cogeneration plant operating in an emergency generator mode for both electrical and thermal power.

The electrical systems must be modified to do the following:

- On loss of grid electrical power, disconnect the NCTS facility from the grid, start the engine/generator sets, and make electrical connections required between the T, NT, and generator buses. When grid power is restored, this process should be reversed to return the facility to the grid.

The thermal systems must be upgraded to perform as follows:

- Provide reliable, unattended operation of the chiller plant and steam/hot water heat exchanger plant to supply both chilled and hot water to meet NCTS loads by monitoring differential temperatures of chilled and hot water, startup and shutdown of chillers and heat exchangers, and cycling valves. The PWCSD steam grid will supply primary thermal power.

- Upon loss of grid steam pressure or failure of the heat exchangers to provide satisfactory hot water, activate the engine/generators to provide required thermal power to the chillers, heat and reheat coils, and domestic hot water heaters.

2.1 Modified Generator Scenarios

In the previous analysis report (Parker et al. 1993), 19 alternative scenarios were analyzed and compared on a life-cycle cost basis to determine the most cost-effective approach to the operation of the cogeneration facility with the requirement for continuous backup of electric and thermal systems at the NCTS. That analysis concluded that the cogeneration facility should be converted to an emergency generator facility providing both electric and thermal backup.

Between the conclusion of the analysis report and during the preparation of this implementation plan, additional information was obtained that affects the technical feasibility of the recommended scenario. In further discussions with SDG&E about the interruptible rate options, it was concluded that Rate Schedule I-3 was not designed for emergency generator operation and cannot be properly employed at NASNI. SDG&E did recommend a new experimental rate option -- Rate Schedule LR. This option is designed to use customer-owned emergency generators to reduce SDG&E's system peak. This new rate option is discussed in greater detail in Section 2.1.3.

Instead of the interruptible rate option, testing of the emergency generators can be scheduled to coincide with the SDG&E system peak using a peak-prediction service already utilized by PWCSD. This scenario, Scenario 20, is discussed in Section 2.1.2, as well as additional Scenarios 21 and 22 in Sections 2.1.3 and 2.1.4, respectively.

2.1.1 Scenario 14: Convert Plant to Emergency Generator Status

Under Scenario 14, discussed in Parker et al. (1993), the cogeneration facility is converted to an emergency generator facility. SDG&E provides the NCTS facility with primary electric energy and the AEI steam plant provides primary thermal energy. The emergency generator system is automatically started if an interruption occurs in the electric power supply or the steam supply.

The existing engines are repaired to reliable operating status as automatic-start emergency generators. Repairs include new load-sharing and speed controls, new air/fuel ratio controllers, and additional repairs as outlined in Parker et al. (1993). The cooling towers are used to provide engine cooling.

The emergency generators are tested under no-load conditions approximately 1 hour each week and under full load approximately 1 hour each quarter. Full-load tests are accomplished through interconnection to the electric grid. Load banks are not required. The emergency generator facility is staffed by one watch stander (WG-11 or equivalent) when the generators are operating.

Part of the existing cogeneration staff's responsibility is to monitor and operate the central chilled water facility. Because the plant is not staffed continuously, the chilled water system is equipped with automated valves and controls to operate the plant and respond to equipment failures. Should a chiller, cooling tower, or pump fail, the control system shuts down the failed component and automatically starts another. The new system is an expansion of the existing Johnson Controls system that currently monitors and controls the HVAC system.

2.1.2 Scenario 20: Shave Peak Demand by Coordinating Maintenance Testing With SDG&E System Peak

Under this scenario, the cogeneration facility is modified as in Scenario 14 above. In addition, PWCSD tests the emergency generators, as required by the NCTS client, to reduce the NASNI electric demand at the time of SDG&E's system peak, thereby reducing the billed demand under the existing SDG&E Rate Schedule A6-TOU. PWCSD presently uses a call-in service each day that predicts when and if SDG&E will experience a monthly system peak. The call-in service is usually available by 10:00 a.m. each weekday; system peaks usually occur in midafternoon during the summer and in early evening during the winter. PWCSD's experience with this service has been 75% effective in predicting SDG&E's

system peak and demand shedding 2 h/d, 3 d/mo during the summer billing months and 1 h/d, 3 d/mo during the winter billing months.

The emergency generators are tested weekly as noted in Scenario 14. Also, as with Scenario 14, the generator facility is not staffed during normal operation. The emergency generator facility is staffed by one watch stander (WG-11 or equivalent) when the engines are load tested.

2.1.3 Scenario 21: Utilize SDG&E Interruptible Rate Schedule LR

Under this scenario, the cogeneration facility is modified as in Scenario 14 above. In addition, PWCSD incorporates the SDG&E experimental Rate Schedule LR, Option 1. This rate option provides a monthly credit to the electric utility bill based on the amount of electric load reduction established in the contract with SDG&E. In return for this credit, PWCSD agrees to operate the emergency generators, at SDG&E's request, to reduce SDG&E's load. Under this rate option, notice to initiate load reduction is given by means of a contact closure at the customer site. In this scenario, the contract load reduction demand is equal to 2,400 kW (four engines at 600 kW each). There is a credit for overgeneration ($1.03168/kWh) and a penalty for undergeneration ($16.50688/kWh) during the period of contact closure, although credits can be built through program participation that reduce the application of the penalty. There is also a penalty for operating the generators any time other than during the contact closure period ($0.0344/kWh for up to 15 hours per billing period; $0.1720/kWh thereafter). If SDG&E cannot provide power to the facility, as in the case of a blackout, this last penalty is waived.

SDG&E endeavors to limit required operation under Rate Schedule LR to a maximum of 80 h/yr. The average in recent years is 29 h/yr, although it did approach 60 hours in 1993.

The emergency generators are tested weekly as noted in Scenario 14. Operation of the engines for an SDG&E-directed interruption does, however, count as a quarterly full-load test. Also, as noted with Scenario 14, the generator facility is not staffed during normal operation. The emergency generator facility is staffed by one watch stander (WG-11 or equivalent) when the engines are operating, which includes during load tests and contact closure periods.

To utilize Rate Schedule LR at the NCTS, NASNI will be required to change from Rate Schedule A6-TOU to Rate Schedule AL-TOU. Although the energy charge is the same for each of these rate schedule options, there is a significant difference in the billing demand structure and demand charge. The existing Rate Schedule A6-TOU has two demand components: $0.95/kW-mo (summer and winter) for noncoincident peak demand (NASNI peak regardless of time-of-day) and $13.84/kW-mo (summer) and $2.46/kW-mo (winter) for demand at the time of SDG&E's system peak. The alternative Rate Schedule AL-TOU has the same $0.95/kW-mo noncoincident peak-demand charge in addition to $11.41/kW-mo (summer) and $1.86/kW-mo (winter) for peak-demand (NASNI peak) during the on-peak billing period.

Because the time and value of billed demand is not the same for the two rate schedule options, the demand charge (per kilowatt-month) cannot be directly compared. To facilitate this comparison, Table 2.1 shows the demand charges (nominalized to the current rate schedule) for both rate options using the NASNI demand profiles for the past three years and corrected for the cogeneration system output (assumed 1,200 kW).

Table 2.1 shows significant variance between the two rate schedule options from month to month. On an annual basis, it appears that Rate Schedule AL-TOU holds an advantage over Rate Schedule

Table 2.1. Demand Charge Rate Schedule Comparison

Period	Actual Demand		Billing Season	Corrected Demand		Peak-Demand Cost		Difference (A6-AL $)
	AL-TOU (peak kW)	A6-TOU (peak kW)		AL-TOU (peak kW)	A6-TOU (peak kW)	AL-TOU (peak $)	A6-TOU (peak $)	
Jan 93	15,992	13,000	W[a]	17,192	14,200	31,977	34,932	2,955
					Total for 1992	1,816,649	1,846,777	30,128
Dec 92	14,969	10,551	W	16,169	11,751	30,074	28,907	-1,167
Nov 92	13,728	13,000	W	14,928	14,200	27,766	34,932	7,166
Oct 92	19,304	16,504	W	20,504	17,704	37,137	43,552	6,415
Sep 92	21,720	17,792	S[b]	22,920	18,992	261,517	262,849	1,332
Aug 92	27,400	21,280	S	28,600	22,480	326,326	311,123	-15,203
Jul 92	25,344	21,312	S	26,544	22,512	302,867	311,566	8,699
Jun 92	25,936	22,056	S	27,136	23,256	309,622	321,863	12,241
May 92	28,160	20,368	S	29,360	21,568	334,998	298,501	-36,497
Apr 92	24,072	22,160	W	25,272	23,360	47,006	57,466	10,460
Mar 92	23,440	21,920	W	24,640	23,120	45,830	56,875	11,045
Feb 92	24,360	23,672	W	25,560	24,872	47,542	61,185	13,643
Jan 92	23,512	22,360	W	24,712	23,560	45,964	57,958	11,994
					Total for 1991	1,984,898	2,119,985	135,087
Dec 91	24,168	21,696	W	25,368	22,896	47,184	56,324	9,140
Nov 91	22,904	22,616	W	24,104	23,816	44,833	58,587	13,754
Oct 91	22,264	21,544	W	23,464	22,744	43,643	55,950	12,307
Sep 91	30,824	24,256	S	32,024	25,456	365,394	352,311	-13,083
Aug 91	28,984	19,056	S	30,184	20,256	344,399	280,343	-64,056
Jul 91	28,336	27,544	S	29,536	28,744	337,006	397,817	60,811
Jun 91	25,600	22,560	S	26,800	23,760	305,788	328,838	23,050
May 91	28,328	27,800	S	29,528	29,000	336,914	401,360	64,446
Apr 91	17,840	15,504	W	19,040	16,704	35,414	41,092	5,678
Mar 91	18,152	16,200	W	19,352	17,400	35,995	42,804	6,809
Feb 91	22,880	18,464	W	24,080	19,664	44,789	48,373	3,584
Jan 91	22,208	21,640	W	23,408	22,840	43,539	56,186	12,647
					Total for 1990	2,058,375	2,181,957	123,582
Dec 90	20,440	15,048	W	21,640	16,248	40,250	39,970	-280
Nov 90	19,728	15,504	W	20,928	16,704	38,926	41,092	2,166
Oct 90	21,928	21,056	W	23,128	22,256	43,018	54,750	11,732
Sep 90	29,664	27,664	S	30,864	28,864	352,158	399,478	47,320
Aug 90	29,280	26,720	S	30,480	27,920	347,777	386,413	38,636
Jul 90	26,728	21,120	S	27,928	22,320	318,658	308,909	-9,749
Jun 90	29,896	26,728	S	31,096	27,928	354,805	386,524	31,719
May 90	31,856	25,320	S	33,056	26,520	377,169	367,037	-10,132
Apr 90	21,024	20,592	W	22,224	21,792	41,337	53,608	12,271

(a) Winter
(b) Summer

Table 2.1. (contd.)

Period	Actual Demand		Billing Season	Corrected Demand		Peak-Demand Cost		Difference (A6-AL $)
	AL-TOU (peak kW)	A6-TOU (peak kW)		AL-TOU (peak kW)	A6-TOU (peak kW)	AL-TOU (peak $)	A6-TOU (peak $)	
Mar 90	23,688	17,184	W	24,888	18,384	46,292	45,225	-1,067
Feb 90	22,944	19,032	W	24,144	20,232	44,908	49,771	4,863
Jan 90	27,336	18,792	W	28,536	19,992	53,077	49,180	-3,897
Dec 89	25,872	24,672	W	27,072	25,872	50,354	63,645	13,291
Nov 89	23,568	20,376	W	24,768	21,576	46,068	53,077	7,009
Oct 89	19,320	13,352	W	20,520	15,552	38,167	38,258	91
Sep 89	35,376	25,776	S	36,576	26,976	417,332	373,348	-43,984

A6-TOU, although AL-TOU is significantly reduced in 1992 ($29,128/yr) compared to 1990 and 1991 ($135,088/yr and $123,581/yr, respectively). This effect may be the result of PWCSD and NASNI efforts in peak load shedding through utilization of the call-in service noted earlier, although this is not conclusive.

2.1.4 Scenario 22: Utilize SDG&E Interruptible Rate Schedule LR

Scenario 22 is the same as Scenario 21 except Scenario 22 assumes only three generators (1,800 kW) operate although four generators (2,400 kW) are contracted with SDG&E, demonstrating the effect of the penalty if one engine/generator fails.

2.1.5 Results

The results of the analysis for these new scenarios are provided in Table 2.2. Only the emergency generators are considered in Table 2.2. The central HVAC and chiller plant energy, operations, and maintenance costs are the same for each of these scenarios and, therefore, are not included. The analysis is based on both technical and cost assumptions.

The technical assumptions are as follows:

- The emergency generators operate at 600 kW each.
- PWCSD operates four generators 2 h/d, 4 d/mo under Scenario 20.
- Testing is 75% coincident with the electrical peak under Scenario 20.
- PWCSD operates four generators an average of 29 h/yr during the SDG&E summer billing period for interruption service under Scenario 21.
- Although contracted for four engines, PWCSD operates three generators an average of 29 h/yr during the SDG&E summer billing period for interruption service under Scenario 22.

Table 2.2. Analysis of Emergency Generator Scenarios

Assumed Operating Schedule						
Month	Billing Season		Scenario 14		Scenario 20	
	Electric	Natural Gas	Full Load (h/engine)	No Load (h/engine)	Full Load (h/engine)	No Load (h/engine)
Jan	W[a]	W	0	4	8	0
Feb	W	W	1	3	8	0
Mar	W	W	0	5	8	0
Apr	W	S[b]	0	4	8	0
May	S	S	1	3	8	0
Jun	S	S	0	5	8	0
Jul	S	S	0	4	8	0
Aug	S	S	1	3	8	0
Sep	S	S	0	5	8	0
Oct	W	S	0	4	8	0
Nov	W	S	1	3	8	0
Dec	W	W	0	5	8	0
Subtotal	S	S	2	20	40	0
Subtotal	W	S	1	11	24	0
Subtotal	W	W	1	17	32	0
Total	All	All	4	48	96	0

Natural Gas Analysis						
Months Per Year	Billing Season		Scenario 14		Scenario 20	
	Electric	Natural Gas	Consumption (therms/yr)	Cost ($/yr)	Consumption (therms/yr)	Cost ($/yr)
5	S	S	1,785	628	11,697	4,115
3	W	S	982	335	7,018	2,469
4	W	W	1,312	481	9,357	3,427
12	All	All	4,079	1,444	17,493	10,012

Electric Analysis						
	Billing Season		Scenario 14		Scenario 20	
Months Per Year	Electric	Natural Gas	Generator (kWh/yr)	Savings ($/yr)	Generator (kWh/yr)	Savings ($/yr)
5	S	S	4,800	385	96,000	132,268
3	W	S	2,400	147	57,600	16,822
4	W	W	2,400	147	76,800	22,430
12	All	All	9,600	679	230,400	171,520

(a) Winter
(b) Summer

Table 2.2. (contd.)

Assumed Operating Schedule						
	Billing Season		Scenario 21		Scenario 22	
Month	Electric	Natural Gas	Full Load (h/engine)	No Load (h/engine)	Full Load (h/engine)	No Load (h/engine)
Jan	W	W	0	4	0	4
Feb	W	W	1	3	1	3
Mar	W	W	0	5	0	5
Apr	W	S	0	4	0	4
May	S	S	1	3	1	3
Jun	S	S	0	5	0	5
Jul	S	S	0	4	0	4
Aug	S	S	30	3	30	3
Sep	S	S	0	5	0	5
Oct	W	S	0	4	0	4
Nov	W	S	1	3	1	3
Dec	W	W	0	5	0	5
Subtotal	S	S	31	20	31	20
Subtotal	W	S	1	11	1	11
Subtotal	W	W	1	17	1	17
Total	All	All	33	48	33	48

Natural Gas Analysis						
	Billing Season		Scenario 21		Scenario 22	
Months Per Year	Electric	Natural Gas	Consumption (therms/yr)	Cost ($/yr)	Consumption (therms/yr)	Cost ($/yr)
5	S	S	10,265	3,612	7,699	2,709
3	W	S	952	335	714	251
4	W	W	1,312	481	984	360
12	All	All	12,529	4,428	9,397	3,320

Electric Analysis								
	Billing Season		Scenario 21			Scenario 22		
Months Per Year	Electric	Natural Gas	Test (kWh/yr)	Interruptible (kWh/yr)	Savings ($/yr)	Test (kWh/yr)	Interruptible (kWh/yr)	Savings ($/yr)
5	S	S	4,800	69,600	87,419	4,800	52,200	(201,198)
3	W	S	2,400	0	49,031	2,400	0	49,031
4	W	W	2,400	0	65,353	2,400	0	65,353
12	All	All	9,600	69,600	201,803	9,600	52,200	(86,814)

Table 2.2. (contd.)

Operations, Maintenance, and Cost Analysis									
Scenario	Total (h/yr)	Staff Labor (h/yr)	O&M Cost ($/yr)	Labor Cost ($/yr)	APCD Permit ($/yr)	Gas Cost ($/yr)	Electric Savings ($/yr)	Sched. Savings ($/yr)	Total Savings ($/yr)
14	208	208	2,000	4,327	1,060	1,444	680	N/A	(8,151)
20	364	290	2,471	6,033	1,060	10,012	171,520	N/A	151,944
21	324	241	3,240	5,014	1,060	4,427	201,803	29,128	217,190
22	243	241	2,930	5,014	1,060	3,321	(86,814)	29,128	(70,011)

- A summary of the generator operating hours (per engine) is shown at the top of Table 2.2.
- Generator operation for full-load tests is performed on the NASNI electric grid and results in reduced electricity consumption from SDG&E.
- No demand savings result from participation in the interruptible Rate Schedule LR.
- Natural gas consumption for full-load operation is 7,310,385 Btu/h per engine.
- Staffing requirements for summer full-load tests are 10 man-hours per test, three times per month. Staffing requirements for winter full-load tests are 20 man-hours per test, once per month.
- Staffing requirements are 33 man-hours for interruption service participation.

The cost assumptions are as follows:

- Electricity generated is at the on-peak transmission rate of $0.08030/kWh (summer) and $0.06143/kWh (winter).
- Electric demand costs under Rate Schedule A6-TOU (Scenario 20) are $13.84/kW-mo (summer) and $2.46/kW-mo (winter).
- Electric demand costs under Rate Schedule AL-TOU (Scenarios 21 and 22) are $11.41/kW-mo (summer) and $1.86/kW-mo (winter).
- Natural gas consumption is at the non-cogeneration rate of $0.35185/therm (summer) and $0.36622/therm (winter).
- Labor cost, including overhead factors, is $20.805/h.
- Operations and maintenance costs are $500/yr per engine plus $10.70/h over 52 h/yr operation.

- APCD permit costs for each scenario are $1,060/yr.

- The penalty cost for not operating generators when required under Rate Schedule LR is $16.50688/kWh for each kilowatt-hour that should have been generated.

- The cost savings as a result of switching from Rate Schedule A6-TOU to Rate Schedule AL-TOU is $29,128/yr based on the 1992 demand profile (see Table 2.1).

As shown in Table 2.2, Scenario 22 has the largest potential savings at $217,190/yr. This scenario, however, has significant risk. If one engine did not operate because of any failure (Scenario 22), the potential savings become a cost of $70,011/yr. In addition, PWCSD will lose the ability to accurately predict the peak-demand period by switching from Rate Schedule A6-TOU to Rate Schedule AL-TOU. There is also a problem of consolidating a single electric billing demand with Rate Schedule AL-TOU. NASNI is now served from two high-voltage electric feeds, each with its own meter. Because peak demand for Rate Schedule AL-TOU is determined by peak demand at each meter, and it is likely that the peak demand at each meter will be set at different times, the sum of the two meter peak demands will be greater than the true peak demand of NASNI. Therefore, without proper consolidation of the two meters, the NASNI demand bill will be inflated. For these reasons, it is recommended that PWCSD proceed with Scenario 20 as outlined in this report.

2.2 Thermal Plant Current Design

In the current design, the thermal plant engines are commanded to start remotely at the electrical panels. Each motor is started by activating the motor starter and opening the natural gas solenoid valve. A liquid petroleum gas valve is provided in parallel with the natural gas valve as a backup energy source. Engine timing is adjusted automatically depending on the source of gas used by the engine. Engine mounted pumps circulate jacket cooling water and aftercooler water. External pumps circulate the engine oil cooler water through engine-mounted heat exchangers. External, three-way bypass valves in the cooling water circuits maintain the proper engine oil and jacket coolant temperatures. Safety controls include sensors for oil temperature and pressure, jacket water temperature, exhaust gas temperature, and engine vibration.

Based on manual isolation valve settings, the chillers operate in three modes -- A, B, and C -- as summarized in Table 2.3. Pump and chiller operations are reset and steam control valves are modulated based on which mode the EMCS senses via valve position end switches. In each mode, the water piping is divided into four circuits: chilled water, engine heat reclaim water, condenser water, and cooling tower water. The EMCS also monitors and controls the fans, air handlers, reheat coils, and various sensors used for facility environmental control.

Mode A provides for primary operation of chiller 1; chiller 2 comes on-line as required to meet building cooling loads. In mode A, chiller absorption heat loads are met by heat recovery from the cogeneration engines. Steam/hot water heat exchangers 1 and 2 are disabled in mode A. Mode A makes the assumption that under fully loaded thermal conditions, there will be enough waste heat from the cogeneration engines to operate two chillers.

Table 2.3. Current Chiller Plant Operation Modes

Mode	Chillers	Heat Source	Pumps On		Valves Open (see Figure 2.1)
A	WC-1 (primary)	Cogeneration Plant	4, 5, 13, 18	1, 9, 11, 15	1, 3, 5, 7
	WC-2 (backup)			2, 8, 10, 16	
B	WC-1 (primary)	Cogeneration Plant	4, 5, 13, 18	1, 9, 11, 15	2, 4, 6, 8
	WC-3 (backup)	HSX-1, HSX-2		3, 7, 12, 17	
	WC-2 (second backup)			2, 8, 10, 16	
C	WC-3 (primary)	HSX-1, HSX-2	4, 5, 13, 18	3, 7, 12, 17	2, 4, 6, 8
	WC-2 (backup)			2, 8, 10, 16	

Mode B provides for primary operation of chiller 1 fed by heat recovered from the cogeneration engines. Chiller 3 comes on as required to meet building loads, but is fed by steam/hot water heat exchangers 1 and 2. If chillers 1 and 3 are unable to carry the cooling load, chiller 2 is activated, also fed by heat exchangers 1 and 2.

Mode C provides for primary operation of chiller 3 fed by steam/hot water heat exchangers 1 and 2. Should chiller 3 become fully loaded, chiller 2 is brought on-line, also fed by heat exchangers 1 and 2. The chilled water loop is designed to provide 42°F water to the facility and to receive 54°F return water, as shown in Figure 2.1. Pumps 1 through 6 and chillers 1 through 3 cycle as required for this operation, depending on the mode in which the system is running.

Engine heat reclaim water is pumped through the engine jackets and exhaust heat recovery boilers, then through the absorber circuits in chillers 1 and 2 (mode A) or chiller 1 (mode B), as shown in Figure 2.1. Heat required by chillers 2 and 3 (modes B and C) is provided by steam/hot water heat exchangers 1 and 2, as shown in Figure 2.1. Heat not rejected to the chillers is rejected to the cooling tower loops through water/water heat exchangers 1 and 2. Domestic hot water for the NCTS also uses this loop.

Chiller heat is rejected to the cooling towers through water/water heat exchangers 3 through 5, as shown in Figure 2.2. This same water loop is also used for the reheat coils and for oil heat exchanger cooling in the cogeneration engines. Heat required by the reheat coils and not provided by the chillers or cogeneration engine oil coolers is made up by steam/hot water heat exchangers 3 and 4.

The cooling towers are piped through dual circuits as shown in Figure 2.2. One circuit takes cooling tower sump water and pumps it through the cogeneration engine aftercoolers. The other circuit pumps

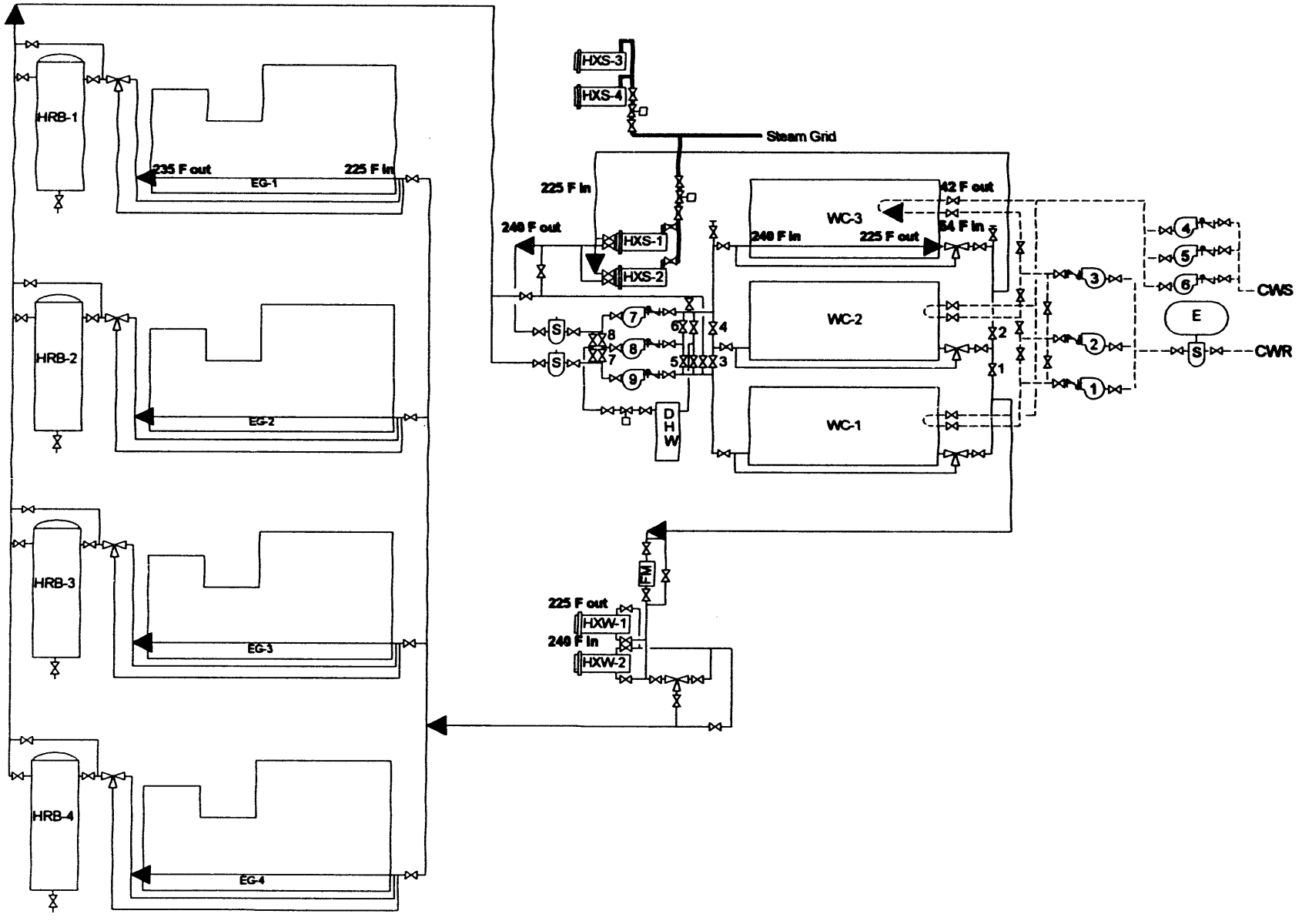

Figure 2.1. Chilled Water, Engine Heat Reclaim Water, and Steam Piping

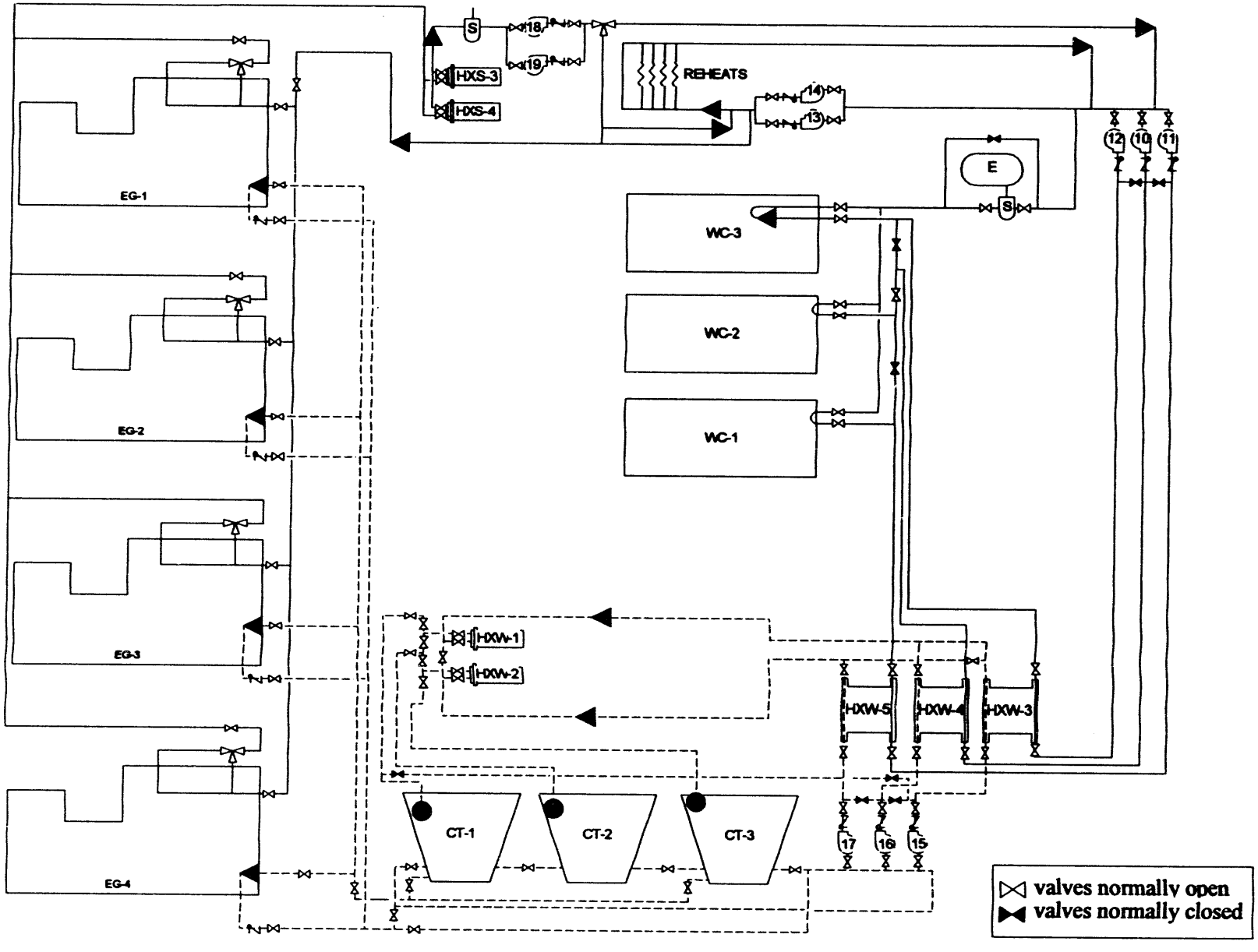

Figure 2.2. Condenser Water and Cooling Tower Water Piping

cooling tower sump water through water/water heat exchangers 1 through 5 to accept heat rejected by the chiller condenser loops and the cogeneration engine jacket cooling loops.

Pumps are operated as either variable speed to maintain temperature differential set points sensed by the EMCS, or as constant speed. All pumping stations include either two or three pumps installed in parallel. Pump status is monitored by a combination of differential pressure (ΔP) sensors on the constant-speed pumps and speed (revolutions per minute [RPM]) sensors on the variable-speed pumps. If flow is lost, another pump is started or the plant is shut down.

Neither the RPM sensors nor ΔP sensors necessarily guarantee that flow loss will be sensed. The RPM sensor monitors motor output shaft speed and not loss of flow because of shaft breakage downstream of the RPM sensor or pipe blockage (something as simple as a closed isolation valve). The ΔP sensors monitor flow rate only when tied into a controller capable of monitoring for low or high ΔP. A too-low ΔP indicates lack of motive force for fluid flow; a too-high ΔP indicates flow blockage (such as a closed isolation valve). A flow switch can be used, but only for sensing flow and not where flow rate is desired for load calculations. In that case, a programmable system must be installed capable of converting ΔP to flow rate based on the specific pump and impeller combination installed.

Four steam/hot water heat exchangers provide backup space and chiller heat. Steam is piped to steam/hot water heat exchangers 1 through 4 to make up heat not provided by the cogeneration engines for operating the chillers, domestic hot water, and reheat loops. The steam piping is detailed in Figure 2.1. Steam/hot water heat exchangers 1 and 2 are disabled when pump P-7, which provides the thermal load to those heat exchangers, is shut down. When the heat exchangers are operational, the steam valve is modulated to maintain a constant outlet water temperature of 225°F. Steam/hot water heat exchangers 3 and 4 are activated only when the reheat circulating pump is running at full speed and the temperature drop across the reheat loop exceeds 12°F.

The expansion tanks include provisions for makeup water, pressure relief, and nitrogen pressurization of the water systems.

The EMCS includes the capability to monitor and record waste heat used for generating space cooling, reheat, and domestic hot water. The EMCS also tracks cooling provided to the facility based on flow rates and temperature differentials

2.3 Electrical Plant Current Design

As originally designed, the cogeneration plant provides primary electrical power to the NCTS facility. The NCTS facility design includes two electrical buses (the T and NT buses). A simplified diagram of the feeders, as originally designed, is shown in Figure 2.3.

As the switchgear is currently configured, the cogeneration plant is tied into the NT bus and the PWCSD electrical grid, while the T bus is fed directly from the PWCSD grid. Power generated by the cogeneration plant is fed to the NT bus. Excess available power is supplied to the PWCSD grid. A simplified diagram of the feeders, as currently operated, is shown in Figure 2.4.

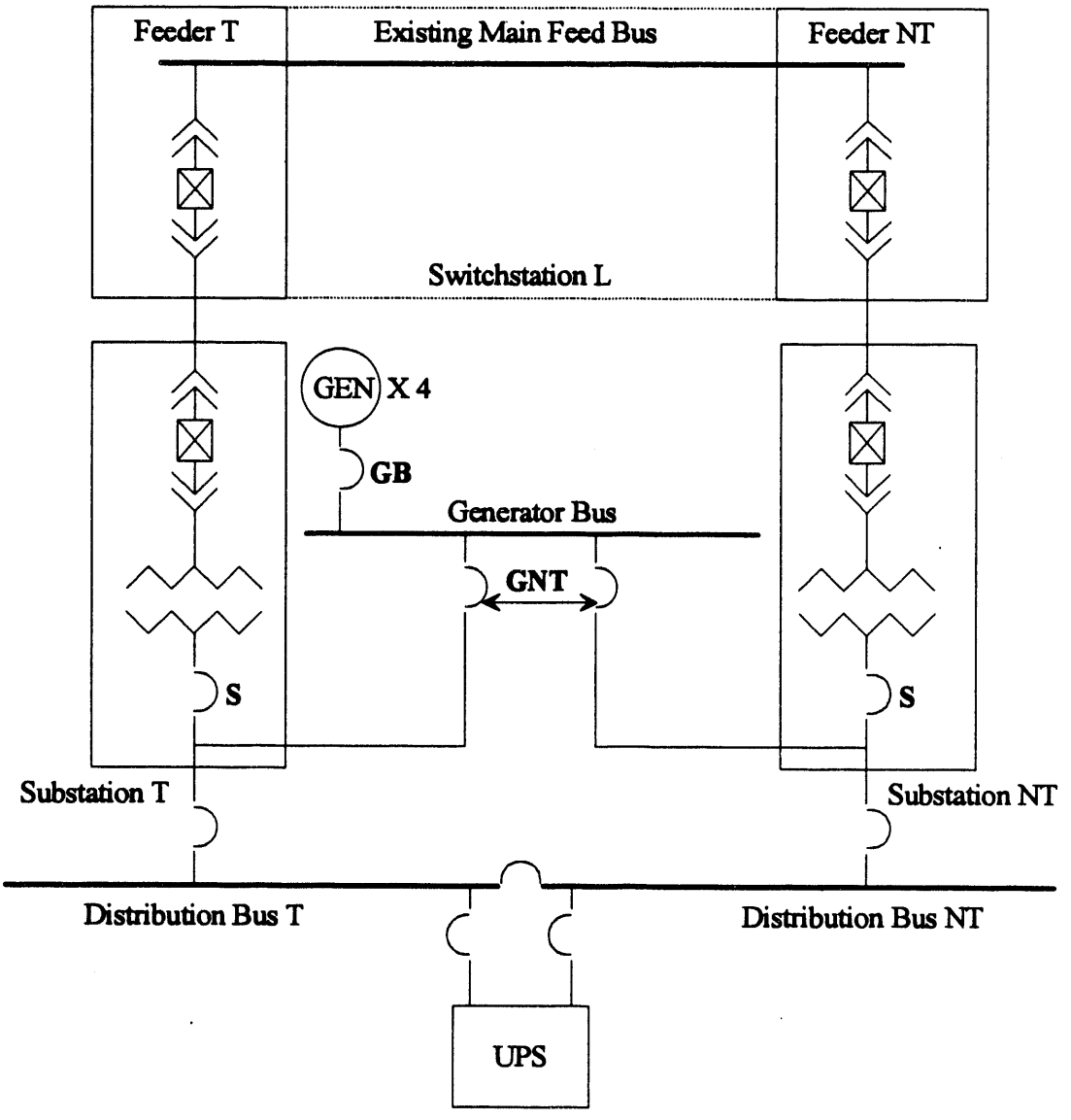

- GNT controlled by over/under-frequency relay, current balance relay, undervoltage phase relay, overvoltage relay, and auto-synchronizing relay.
- GB controlled by bus differential relay, directional power relay, current balance relay, electronic engine governor, governor load-control relay, and auto synchronizing relay.
- S controlled by undervoltage phase sequence relay, over/under-frequency relay, overvoltage relay, current balance relay, directional current relay, auto synchronizing relay, and locking out relay (controlled by transformer differential, sudden pressure, and low liquid level).
- Substation switch controlled by locking out relay (same as before), phase overcurrent relay, and residual overcurrent relay.

Figure 2.3. Simplified Electrical Feeder Diagram - As Designed

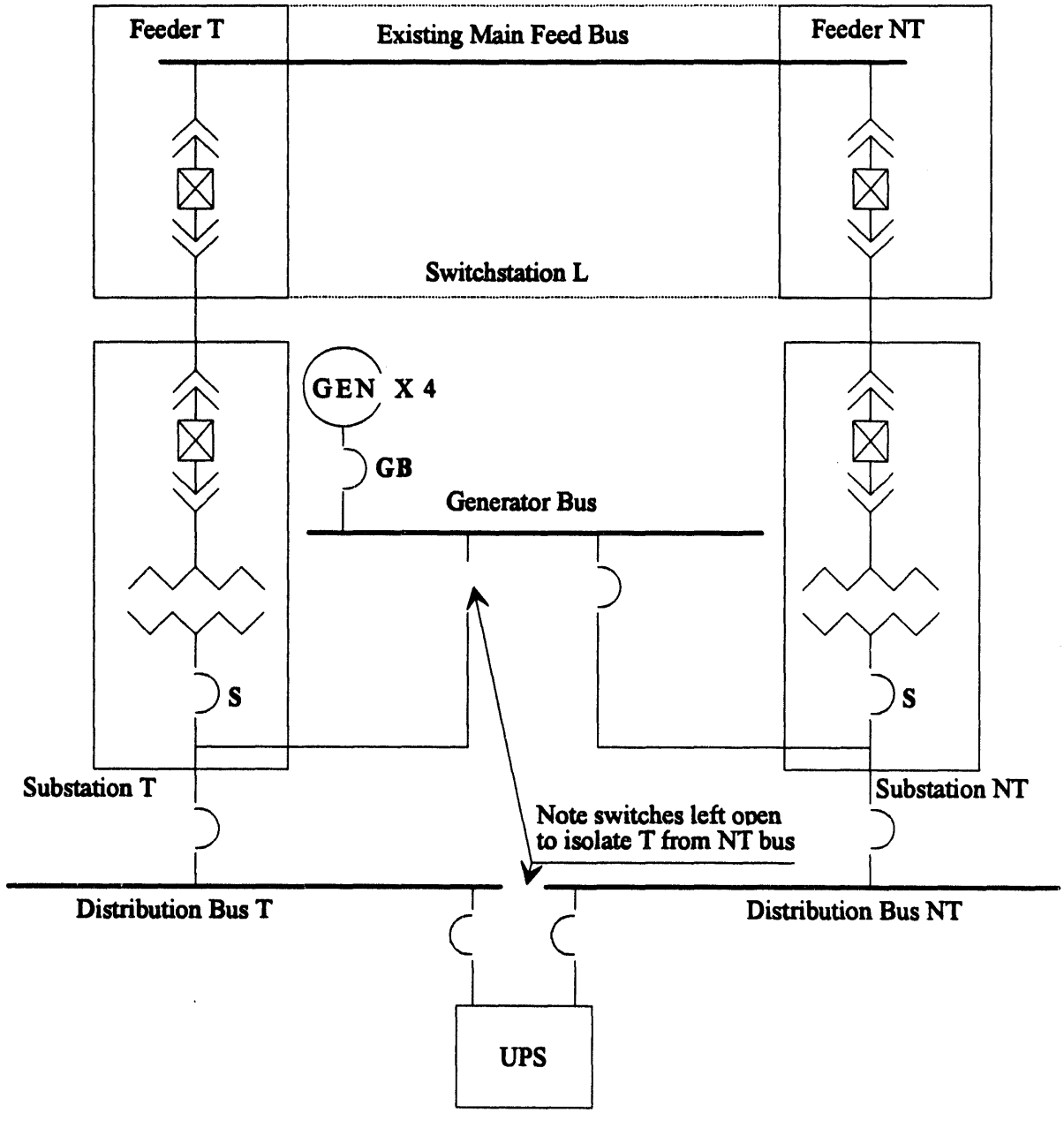

Figure 2.4. Simplified Electrical Feeder Diagram - As Operated

The original design called for relays and switchgear to isolate the facility and engine/generator plant in case of reverse power flow, among other conditions, as shown on Figure 2.3. It appears, however, that the switchgear has not been properly sequenced to disconnect the NCTS facility from the power grid before generator operations are lost. When power is lost on the PWCSD grid, the relays and breakers are not activated in the proper sequence, and the overload on the cogeneration plant causes it to trip off-line, eliminating any backup power option that the cogeneration plant might have provided for the NCTS facility. This problem should be corrected if the facility continues to operate in a parallel connection mode. The existing switchgear and relays should provide isolation from the grid during a power outage, based on the voltage and frequency relays. The NCTS should reconnect to the grid upon resumption of grid power based on the action of the auto synchronizing relays.

2.4 Proposed Operation

As proposed, the PWCSD electrical grid would provide primary electrical power. The NCTS electrical power plant would operate in an unmanned, fully automatic emergency generator. This would require that, on a loss of grid electrical power, the NCTS facility disconnect from the PWCSD grid and start the engine/generators. Upon restoration of grid power, the NCTS facility would synchronize with and reconnect to the grid and the engine/generator plant would be shut down. Based on information provided under the system peak-demand prediction contract, PWCSD would schedule engine/generator tests to occur during peak periods to reduce the NASNI electrical load, resulting in a significant economic benefit to the U.S. Navy as outlined earlier.

The chiller and steam/hot water heat exchanger plant would need to provide reliable, unattended chilled and hot water to meet the NCTS cooling and heating/reheat loads. These needs would be met by monitoring chilled- and hot water differential temperatures and cycling relays and valves to startup and shutdown the required chillers and heat exchangers. The PWCSD steam grid would provide primary thermal power for the chillers. On a loss of grid steam pressure or the inability of the heat exchangers to provide adequate hot water, the plant would startup the engine/generator sets to provide required thermal power to the chillers, reheat coils, and domestic hot water heater. A remote workstation can be installed at another PWCSD site to allow for remote trouble reporting by the EMCS and preliminary monitoring and troubleshooting before mechanics are sent to the site. The EMCS can also report required scheduled maintenance, based on run times, as needed.

Modified plant operation modes are shown in Table 2.4. Mode A, designed for normal operation, provides for primary operation of chillers 1 and 2 with absorption heat loads met by the steam/hot water heat exchangers. Should either chiller be unable to maintain the set point, PWCSD is notified of the problem at the remote workstation and chiller 3 is brought on-line as a backup. The valving is modified, depending on which chiller is being backed up. According to the manufacturer's specifications for the installed chillers, a single chiller should be able to carry the entire building cooling load. If two chillers are unable to carry the cooling load, serious problems requiring immediate mechanic's attention are present.

On startup of the engine/generator sets for either loss of electrical power or steam pressure, the system notifies the remote workstation and switches to mode B. Mode B, designed to provide a cooling sink for the engine/generator sets, provides for primary operation of chiller 1 fed by heat recovered from the engine/generator sets. Chillers 2 and 3 come on as required to meet building loads, fed by the steam/hot water heat exchangers. Like mode A, if any of the chillers are unable to maintain their set point, an alarm is sounded at the remote workstation to request that a mechanic be sent to the site to correct the problem

Table 2.4. Modified Plant Operation Modes

Mode	Chillers	Heat Source	Pumps On		Valves Open
A (normal operation)	WC-1	HSX-1, HSX-2	4, 5, 13, 18	1, 9, 11, 15	1, 2, 4, 6, 7, 8
	WC-2			2, 8, 10, 16	
WC-3 as backup for WC-1	WC-3			3, 7, 12, 17	1, 2, 3, 5, 7, 8
WC-3 as backup for WC-2					1, 2, 4, 6, 7, 8
B (engine/generator sets as emergency generators or as backup heat source)	WC-1	Engines	4, 5, 13, 18	1, 9, 11, 15	2, 4, 6, 8
	WC-2	HSX-1, HSX-2		2, 8, 10, 16	
	WC-3			3, 7, 12, 17	

3.0 Modifications

Modifications to the NCTS cogeneration facility are indicated in three areas: the energy management and control system, engine controls, and electrical switchgear. Additionally, modifications may be made to the APCD permits to allow the U.S. Navy to bank emission credits for use elsewhere.

3.1 Energy Management and Control System

The chiller plant appears to be operating reliably. The key requirement here is to position the isolation valves for startup and shutdown to switch operation among the chillers. Modifications to the existing control system will be required to motorize some of the isolation valves to allow the EMCS to switch between the chillers as shown in Figure 3.1. Although the eight valves recommended for motorizing will not all be used in modes A and B, all eight of the valves should be motorized at this time to allow for an easier conversion to unmanned cogeneration in the future should the economics change significantly enough to make regular cogeneration economically feasible. It is recommended that pneumatic valve actuators be used to match the existing valve actuators in the plant and to minimize the confusion factor for the maintenance mechanics. Manual positioning of other isolation valves, either open or closed, is shown in Figure 3.2.

The EMCS will need to be modified and reprogrammed to allow fully automatic switching between chiller modes and remote annunciation of any problems encountered or symptoms that should be checked by a mechanic. The EMCS should sense grid steam pressure and, on a loss of grid pressure, initiate operation of the engine/generator sets to supply the chiller absorber load. The EMCS should also monitor steam/hot water heat exchanger performance and initiate the engine/generator sets if a problem occurs with either the steam supply or heat exchangers.

A remote workstation is recommended for installation at a remote site to allow for remote interface with the EMCS, monitoring of alarm conditions, and for initial troubleshooting of reported alarms so that the appropriate mechanics can be dispatched to the site. This will require installation of a modem at the NCTS workstation for communication. An uninterruptible power supply is recommended for both the NCTS and remote workstations to allow continued control and monitoring in the event of power failure at either site.

Required control modifications include the following:

- Replace the isolation valves in the engine heat reclaim water piping cross-connection in the chillers' supply and discharge lines and between pumps 7, 8, and 9 with 10-in. Motorized valves (valves 1 through 8, see Figure 3.1).

- Install a pipe tap, isolation valve, and pressure sensor in the PWCSD steam feed line to allow the EMCS to sense a loss of steam pressure requiring activation of the engine/generator sets as a backup heat source.

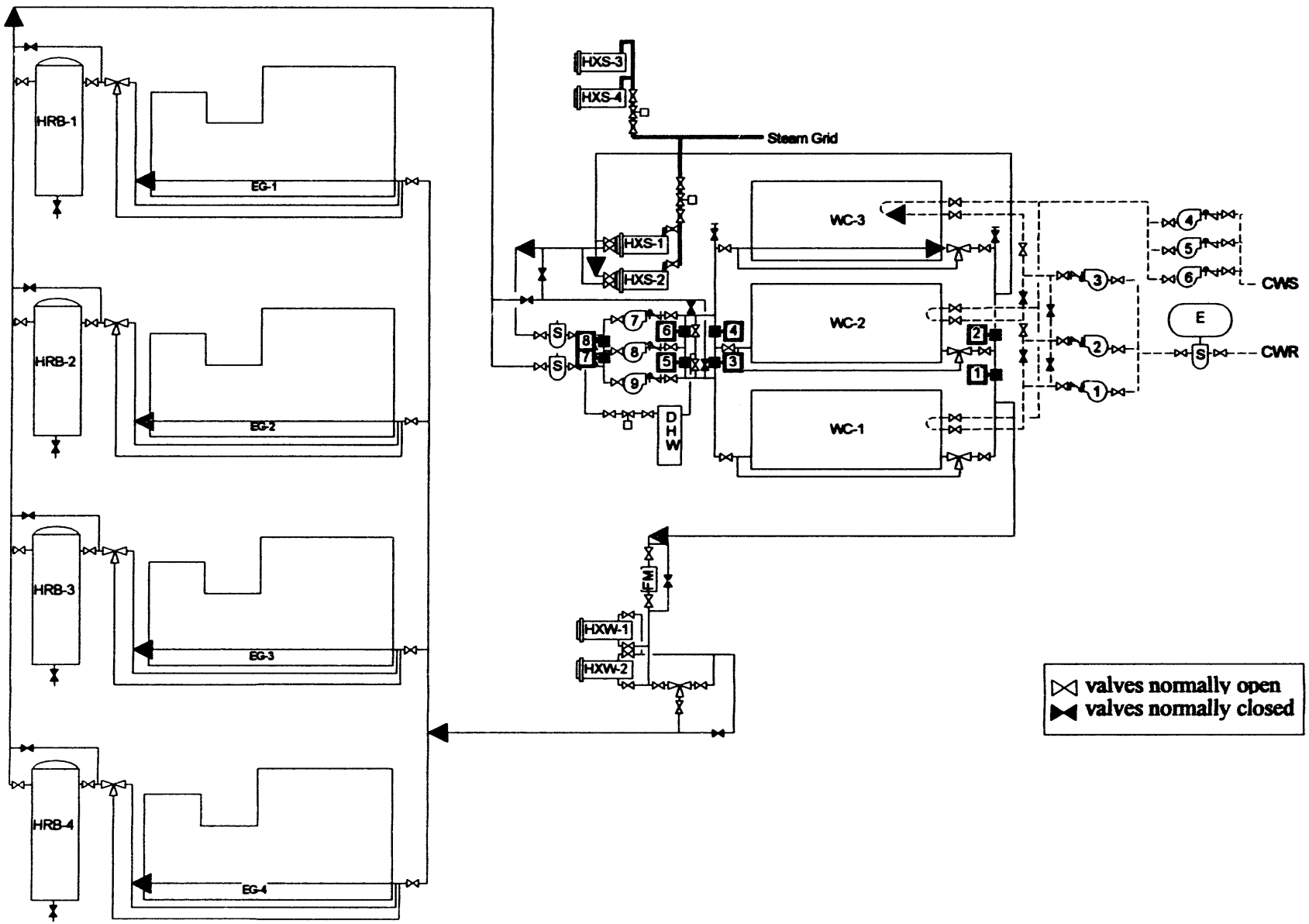

Figure 3.1. Chilled Water, Engine Heat Reclaim Water, and Steam Piping Modifications

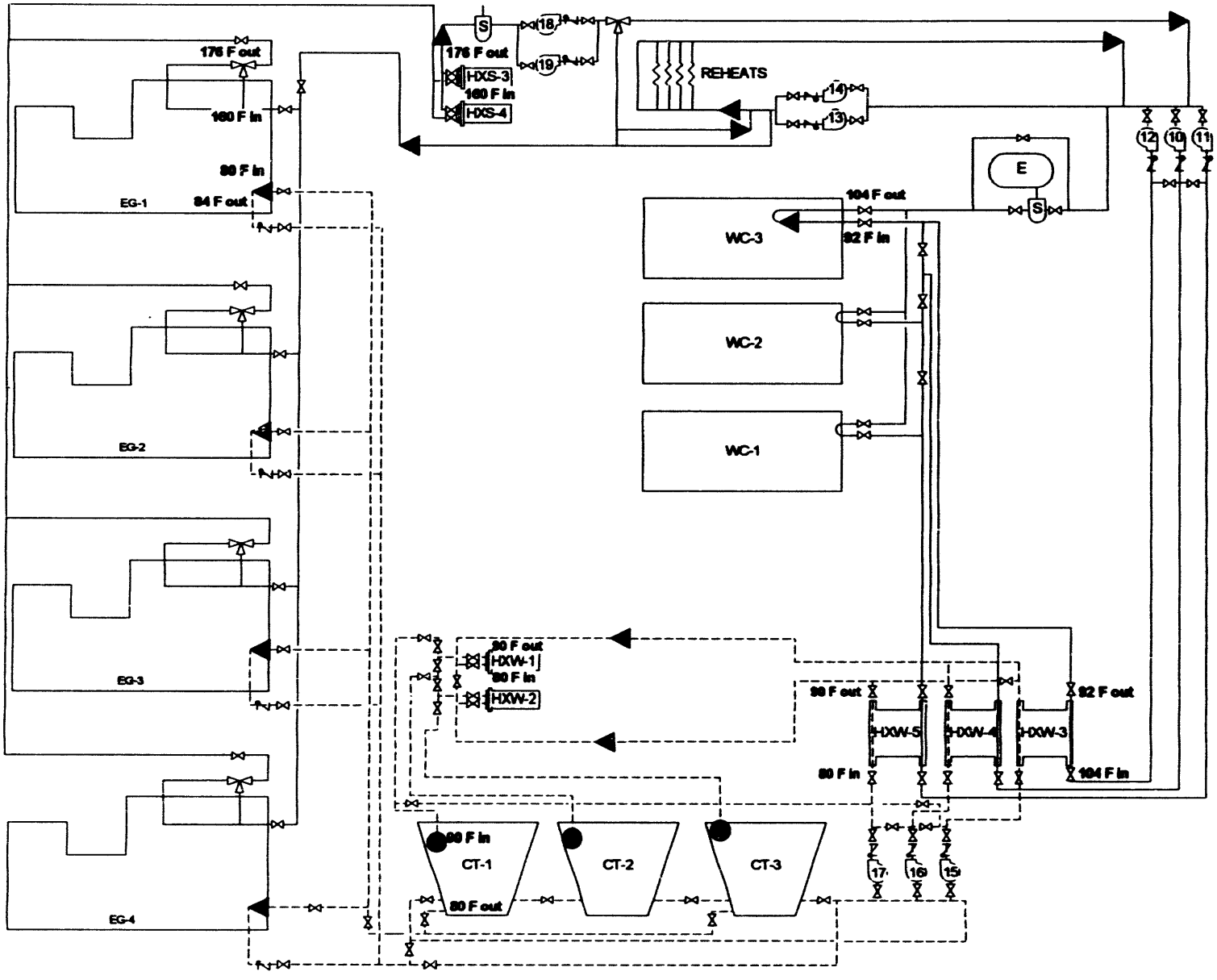

Figure 3.2. Condenser Water and Cooling Tower Water Piping

- Install control relays to allow the EMCS to start and stop operation of the chillers.

- Install control relays to allow the EMCS to start and stop operation of the engines.

- Install required conduit and control cables to allow the EMCS to communicate with the relays and newly motorized valves.

- Install a modem in the NCTS workstation and install a remote workstation at a location to be designated by PWCSD to allow for remote trouble reporting and system monitoring.

- Reprogram the existing EMCS to allow for monitoring of plant performance, grid steam pressure, and steam/hot water heat exchanger performance with chiller/pump/cooling tower switching, engine startup, and remote alarm notification as needed.

- Tie into the existing circuit breakers in the "T" and "NT" electrical distribution sections to allow for control of the circuit breakers under emergency generator operation to match electrical load to generator capacity.

- Install an uninterruptible power supply (UPS) at the NCTS EMCS and at the remote workstation to ensure continued EMCS operation in the event of loss of electrical power to the workstations. The UPS shall be sized to provide power to the workstation, video monitor, and the modem.

3.2 Engine/Generator Plant

Repairs to, or replacement of, the existing engine controls will be required to ensure reliable engine start and operation during loss of grid power. Because of the sketchy history of the existing control system and the requirement for reliable engine operations, it is recommended that the existing system be replaced with an electronic control package rather than repaired. The replacement engine controls should include synchronization as required for satisfactory operation on return of grid power. Replacement of the controls package should also include replacement of the ignition system from its current magneto configuration to an electronic ignition.

Natural gas engines are not known for reliability when block loaded. This unreliability should not be a problem because the UPS at NCTS will allow the generators to assume the load incrementally rather than picking it up as a block load. For monthly load testing, the engines will be paralleled with the grid and should not have difficulty in accepting the load.

The engine control package should respond to the same relays that open and close the switchgear and the EMCS to start the required number of engines to meet either the thermal load or the electrical load demand in the proper sequence. If an engine fails to start within a specified period, or if the engine reaches a specified percentage of full load, another engine can be started. Upon return to grid power, the controller should shut down the engine/generator plant.

The engines should be kept in a warm standby mode (120° F) to ensure reliable startup and to minimize wear and tear on startup. High temperatures will cause accelerated breakdown of the oil, while low temperatures will cause hard startup and accelerated wear and tear during the startup. Electric jacket

water heaters can be installed to maintain the engine blocks at the manufacturer's recommended temperature for reliable starting. Jacket water heaters should provide more reliable temperature control than trying to use the absorber hot water, because the water temperature is 240° F and the blocks should be maintained at only about 120° F.

When the engines are started for either testing or emergency operation, the generators should be loaded and the engines allowed to run until they reach their normal operating temperature. Both steps will extend the operating life of the engines. The oil prelube pump should be started prior to the starter motor to allow prelubrication of the engine block before starting the piston cycles, further minimizing wear and tear during the startup cycle.

Specific recommendations for the engine controls include the following:

- Replace the 2301 load-sharing and speed control.
- Replace the Englehard air/fuel ratio controller.
- Replace the Woodward governor actuator, engine, synchronizer and switchgear; include the capability for load sharing between the engines, response to a remote contact closure for engine starting and stopping, and starting of the oil pump prior to engagement of the starter motor.
- Rewire the electrical and instrumentation systems to adapt them to the new controls.
- Replace the existing magneto ignition system with an electronic ignition system.
- Install jacket heaters to maintain the engines at a suitable temperature for reliable starting.

3.3 Electrical Switchgear

Proper sequencing of the relays controlling the electrical switchgear is required. The existing relays should allow the switchgear to disconnect the NCTS buses from the PWCSD grid upon loss of grid power and to reconnect the NCTS buses to the grid upon restoration of grid power. Since they have not been sequenced properly, the engines overload before the building electrical distribution is disconnected from the electrical grid. The resulting overload on the engines causes them to shut down. Proper sequencing of the relays should allow the switchgear to disconnect the building from the grid prior to engine shutdown. Although this should only be a problem during monthly testing, when the engines are operating in parallel with the grid, the relays should be sequenced to allow the engines to operate properly as emergency generators should a power outage occur during an engine test.

The load on the generators at engine start during a power outage could overload the generators, causing them to shut down. To prevent this, the existing distribution bus contacts can be tied into the EMCS so that when a power outage occurs, and indicated by the opening of the substation switch, the EMCS can signal the contacts to open. As the generators are available to pick up the electrical load, the EMCS can signal the contacts to close. The contact closing sequence can be programmed into the EMCS and modified at any time. If the EMCS detects that the engines are reaching overload conditions, it can signal an appropriate number of the contacts to be reopened to unload the generators.

The specific recommendation for the electrical switchgear is as follows:

- Sequence the relays controlling the switchgear to properly isolate the facility during a loss of grid power.

3.4 Air Pollution Control District

The proposed plan for the NCTS cogeneration plant is to convert the existing engines to a limited operation schedule. The current engines would be used in the event of a utility interruption to provide electricity. Because these actions involve changes in emissions and emissions sources, many issues will need to be addressed as outlined below.

3.4.1 Switch From Cogeneration to Limited Operation

Currently, the NCTS plant has four engines with Permits to Operate. Permits to Operate are not required for engines classified as emergency generator status. To be classified as such, however, the engine must operate less than 100 hours annually for maintenance purposes only and during utility interruptions. Because the estimated operating hours for maintenance is extremely close to 100 hours, the engines' current Permits to Operate should be retained.

3.4.2 Bank Emission Reduction Credits

Because the plant would operate at a greatly reduced level, thereby reducing the emissions level, it is possible for PWCSD to receive and bank emission reduction credits (ERCs). Banking is a system through which ERCs are reserved for future use.

The banking of ERCs is a complex process. The issues include determining the actual emission reduction for each pollutant, issuing the ERCs, setting up a bank, and banking the ERCs. Because of the complexity of the process, and because the APCDs hold a considerable amount of discretionary power within the process, it is recommended that personnel with local APCD expertise be retained to negotiate with the APCD. Several firms of this type exist, including firms with experience associated with military bases.

For an ERC to be issued, an actual reduction in emissions must occur. Once the equipment has been repermitted at the new expected level of operation, the reduction can be calculated. The emissions reduction is based on the difference between the previous actual emission rate, which is calculated using the actual operating conditions of the source averaged over the two years prior to the permitted change in status, and the maximum emitting capacity of the modified equipment following the permitted change in status. The calculation of reductions may also include other factors, as outlined in the San Diego APCD Regulations, Rule 20.1. These factors may include the incorporation of the best available control technology (BACT), reasonably available control technology (RACT), reasonable further progress (RFP), and the lowest achievable emission rate (LAER).

Once an actual reduction in emissions has been determined, the reduced emissions may be banked for future use in accordance with Rules 26.0 through 26.10 of the San Diego APCD Regulations. Because the emission reductions for the NCTS plant would be the result of a limitation on the use of existing equipment

remaining in service with a Permit to Operate, any ERCs issued should be classified as Class A ERCs. Class A ERCs should be eligible for use as emission offsets as long as they comply with federal regulations.

An important step in banking ERCs is to set up a bank, involving the receipt of written authorization from the APCD and the payment of fees. Once the bank is set up, PWCSD has received authorization to bank the ERCs. As long as everything is in accordance with Rules 26.0 through 26.10, the U.S. Navy may bank the ERCs for future use by the Base or for use as an offset by a new or modified source. Banked emissions do not have to be used solely by the owner; it is possible for them to be sold or traded as long as the transfer is in accordance with Rule 26.3, which states "Banked emission reductions may be transferred in whole or in part by any means of conveyance permitted by the laws of this state."

Another issue is that new rules and regulations will go into effect in 1994, including the New Source Review. The effects of these changes are not known at this time. Any changes, however, involving classification or calculation of reductions would certainly have an impact.

3.5 Operations and Maintenance Options

The U.S. Navy may wish to contract for the engine/generator plant O&M under a load-shedding strategy rather than operate it with government personnel. Under this scenario, the best guarantee of competence to the U.S. Navy would probably be offered by a performance-based contract. The contract can be structured to allow the contractor payment based on the avoided cost of utilities to the U.S. Navy, as demonstrated by the SDG&E bills and plant metering. The contractor would be given a share of the savings resulting from avoided demand or be required to pay a portion of the lost savings if the engines are not be able to operate on demand. The contract could be based on the SDG&E rate structure in effect for the base. The U.S. Navy would notify the contractor by a specified time each day for the contractor to test the engines and provide electrical power to the U.S. Navy's switchgear on electrical peak days. It is recommended that a performance bond be required to ensure payment to the U.S. Navy of foregone savings.

The contractor would be responsible for engine O&M. Because the contractor's payment would be based on avoided demand, the contractor would have an incentive to produce the maximum possible load and to maintain the engines to ensure that capability. The U.S. Navy would receive the added benefit of more reliable engines for operation in the emergency generator mode, should that be necessary. The U.S. Navy would be responsible for providing an adequate natural gas supply and a specified quantity of cooling water at a specified temperature at the connecting flanges, as well as for APCD certification. The contractor should be required to maintain the engines and catalytic converters in such a state that they pass the APCD inspections. The EMCS logging function can be used to verify the presence or absence of the required cooling water supply.

If the U.S. Navy wants the contractor to also handle chiller plant O&M, the contract must be written to ensure that the contractor has an incentive to properly maintain the plant, rather than to minimize the expense of preventive maintenance by avoiding it, and maximize additional payments arising from corrective maintenance. The contract can be structured so that the contractor receives payment based on the efficiency of the plant; i.e., based on the amount of cooling water provided by the plant versus the amount of steam consumed. Proper maintenance is a key factor in efficient plant operation, and an economic incentive is the best guarantee of performance. The EMCS is already configured to monitor heat

used for cooling for Federal Energy Regulatory Commission (FERC) calculations and should be usable for plant efficiency monitoring. Security can be added to the EMCS to allow only PWCSD access to the energy data.

If the U.S. Navy chooses to keep the chiller plant while turning the engine plant over to a contractor, clear demarcation of areas of responsibility are critical. The contractor can be given the engine/generator plant, a guarantee of a specified quantity of cooling water at a specified temperature, and a sufficient supply of natural gas or propane/air, and be required to provide electrical power at the inlet terminals on the electrical switchgear. The cooling towers, which are used by both the engines and the chillers, should be maintained by the same persons who operate and maintain the chillers because the chillers are operated continuously but the engines will operate only intermittently.

Options for plant O&M as outlined above are summarized in Table 3.1.

Table 3.1. Plant Operation and Maintenance Options

Item	Option 1	Option 2
Engine/Generators	U.S. Navy hire a contractor to operate and maintain the plant; payment to be made by the U.S. Navy or penalty to be paid by the contractor based on calculated savings or cost of engine operation during U.S. Navy-directed periods.	U.S. Navy hire a contractor to operate and maintain the plant; payment to be made by the U.S. Navy or penalty to be paid by the contractor based on calculated savings or cost of engine operation during U.S. Navy-directed periods.
Chiller Plant	PWCSD - No interaction with the engine O&M contractor.	Contractor to operate chiller, cooling towers, and heat exchangers with payment calculated based on efficiency of system based on monitoring by EMCS of chilled water produced and steam consumed during the billing period.
Steam/Hot Water Heat Exchangers		
Cooling Towers	PWCSD - U.S. Navy to guarantee the contractor a quantity of engine cooling water at a given temperature at the engine piping flanges.	
Electrical Switchgear	PWCSD - Contractor to have responsibility to provide power to electrical connections on generator side of switchgear.	PWCSD - Contractor to have responsibility to provide power to electrical connections on generator side of switchgear.

4.0 References

10 CFR 436. 1990. U.S. Department of Energy, "Federal Energy Management and Planning Programs." U.S. Code of Federal Regulations.

Gifford, W. L. 1982. *Cogeneration Feasibility Study Naval Regional Data Automation Center (NARDAC).* Project No. P-261, Merle Strumm and Associates, San Diego, California.

Parker, S. A., D. M. Carroll, K. L. McMordie, D. R. Brown, K. K. Daellenbach, S. A. Shankle, and D. J. Stucky. 1993. *Analysis of Operating Alternatives for the Naval Computer and Telecommunications Station Cogeneration Facility at Naval Air Station North Island, San Diego, California.* PNL-8974, Pacific Northwest Laboratory, Richland, Washington.

Distribution

No. of Copies	OFFSITE
12	DOE/Office of Scientific and Technical Information
2	K. Dean Devine Federal Energy Management Program U.S. Department of Energy EE-44 1000 Independence Avenue SW Washington, DC 20585
	M. Ginsberg Federal Energy Management Program U.S. Department of Energy EE-44 1000 Independence Avenue SW Washington, DC 20585
2	L. Harris Federal Energy Management Program U.S. Department of Energy EE-44 1000 Independence Avenue SW Washington, DC 20585
	V. Petrolati DOE/In-House Energy Management U.S. Department of Energy 1000 Independence Avenue SW Washington, DC 20585
	J. Ashley NAVFAC Code 135A 200 Stoval Street Alexandria, VA 22332-2300

No. of Copies	OFFSITE
	F. Beason U.S. Air Force Civil Engineering Support Agency HQ AFCESA/ENM 139 Barnes Drive Tyndall AFB, FL 32403-5319
	M. Carr U.S. Department of Defense Office of Secretary of Defense DASD (L) EP The Pentagon Washington, DC 20301-8000
	J. Heller Naval Facilities Engineering Service Center Code 111E2 Port Hueneme, CA 93043-5014
6	R. Miner Southwest Division, Naval Facilities Engineering Command Code 1632RM 1220 Pacific Highway San Diego, CA 92132-5910
6	J. Thomas U.S. Navy Public Works Center San Diego PWC Code 650, Box 368113 2730 McKeen Street, Suite 1 San Diego, CA 92136-5113

No. of Copies

ONSITE

DOE Richland Operations Office

D. D. Green	K8-50

29 Pacific Northwest Laboratory

C. A. Anderson	K5-20
R. Bartlett	K8-15
D. M. Carroll (9)	K5-08
K. L. McMordie (3)	K5-08
S. A. Parker (3)	K5-08
N. J. Reed, Project File (2)	K5-20
W. F. Sandusky	K5-06
D. J. Stucky (3)	K6-57
Publishing Coordination	K1-06
Technical Report Files (5)	P8-55

DATE
FILMED
6/15/94

END