Association for Information and Image Management

1100 Wayne Avenue, Suite 1100
Silver Spring, Maryland 20910

301/587-8202

Centimeter

Inches

MANUFACTURED TO AIIM STANDARDS
BY APPLIED IMAGE, INC.

1 of 1

HW-67946

Cover Sheet for a Hanford Historical Document Released for Public Availability

Released 1994

Prepared for the U.S. Department of Energy
under Contract DE-AC06-76RLO 1830

Pacific Northwest Laboratory
Operated for the U.S. Department of Energy
by Battelle Memorial Institute

Battelle

DISTRIBUTION OF THIS DOCUMENT IS UNLIMITED

~~DISTRIBUTION RESTRICTED TO U.S. ONLY~~

ARCHIVED
MAY 0 4 1994
OSTI

DISCLAIMER

This is a **historical document** that is being released for public availability. This was made from the best available copy. Neither the United States Government nor any agency thereof, nor Battelle Memorial Institute, nor any of their employees, makes **any warranty, express or implied, or assumes any legal liability or responsibility for the accuracy, completeness, or usefulness of any information, apparatus, product, or process disclosed, or represents that its use would not infringe privately owned rights.** The views and opinions of authors expressed herein do not necessarily state or reflect those of the United States Government or any agency thereof.

[redacted]

DECLASSIFIED

DOCUMENT NO.

HW-67946

SERIES AND COPY NO.

[redacted]

January 10, 1961

GENERAL ELECTRIC

HANFO[redacted]OMIC [redacted]TS O[redacted]ATION, RICHLAND, WASHINGTON

[X] [redacted]

[ ] OTHER OFFICIAL CLASSIFIED INFORMATION

THIS MATERIAL CONTAINS INFORMATION AFFECTING THE NATIONAL DEFENSE OF THE UNITED STATES WITHIN THE MEANING OF THE ESPIONAGE LAWS, TITLE 18, U. S. C., SECS. 793 AND 794, THE TRANSMISSION OR REVELATION OF WHICH IN ANY MANNER TO AN UNAUTHORIZED PERSON IS PROHIBITED BY LAW.

[redacted]LE

Proposal for Charging Heat Treatment Test Elements GEH-10-44 & 45

AUTHOR

R. S. Kemper
F. E. Young

ISSUING FILE

COPY
EA
961
10

[redacted]

ROUTE TO:	PAYROLL NO.	LOCATION	FILES ROUTE DATE	SIGNATURE AND DATE
H. Johnson	17400	# 49230	1/25/61	C H Johnson 1/31/61

DECLASSIFIED

C-3195-MS (7 - 55) A.E.C.-G.E.-RICHLAND, WASH.

MASTER

[redacted]

DISTRIBUTION OF THIS DOCUMENT IS UNLIMITED

~~DISTRIBUTION RESTRICTED TO U.S. ONLY~~

[redacted]

DECLASSIFIED

HW-67946

This document consists of 20 pages, [redacted]

PROPOSAL FOR CHARGING HEAT TREATMENT TEST ELEMENTS GEH-10-44 & 45

Classification Cancelled and Changed To DECLASSIFIED
By Authority of CG-PR-2, RM Otan, 2-22-94.
By Jerri Maley, 3-8-94
Verified By DK Hanson, 3-21-94

by

R. S. Kemper & F. E. Young
Fuels Fabrication Development — Fuel Element Design

Reactor & Fuels Research & Development
HANFORD LABORATORIES

January 10, 1961

DISTRIBUTION

1. F. W. Albaugh
2. T. W. Ambrose/T. W. Evans
3. J. A. Ayres
4. J. H. Brown
5. J. J. Cadwell
6. E. N. Heck
7. E. A. Hylsky, c/o Phillips Petroleum Co.
8. J. H. Johnson, c/o Phillips Petroleum Co.
9. F. E. Young
10. R. S. Kemper
11. G. A. Last
12. P. M. Midkiff, AEC-HOO
13. J. E. Minor
14. R. Neidner, c/o Phillips Petroleum Co.
15. R. E. Olson
16. J. C. Tverberg
17. Record Center
18. 300 File
19. Extra

[redacted]

This document classified by:

Supervisor, Fuels Fabrication Development

[redacted]

DECLASSIFIED

[redacted]

DECLASSIFIED

PROPOSAL FOR CHARGING HEAT TREATMENT TEST ELEMENTS GEH-10-44 & 45

I. OBJECTIVE

The objective of this irradiation is to determine the differences in irradiation behavior; typified by dimensional changes, surface roughness, and overall distortion; resulting from elements of similar fabrication history but different beta heat treating schedule. The fuel will be the inner tube only of an NPR fuel assembly. Both elements were heated in chloride salt at 730 C; one was rapidly quenched and the other air cooled to obtain a wide variation in grain size and structure and residual stress.

II. SUMMARY OF TEST CONDITIONS

Maximum Fuel Temperature		889 F (476 C)
Maximum Fuel Surface Temperature	1 - Outer	704 F (374 C)
	2 - Bore	682 F (360 C)
Maximum Clad Surface Temperature	1 - Outer	513 F (267 C)
	2 - Bore	514 F (267 C)
Weight of Uranium, gm/in		283
Total Weight of Uranium, gm		8180
Maximum Power Generation, kw/ft		64.5
No. of Fuel Element Assemblies		2
Water Flow Rate		26,850 lb/hr (65 gpm at 435 F)
Water Velocity, ft/sec	1 - Outer	25.9
	2 - Bore	37.9
Film Coefficients, BTU/hr-ft^2-F	1 - Annulus	11,100
	2 - Bore	13,650
Maximum Loop Pressure, psia		2,000

III. DESCRIPTION OF THE FUEL ELEMENTS

Two NPR inner tubes are proposed for this irradiation. The top element will be number 61-61 and the bottom element will be number 61-97. The fuel elements are fabricated from natural uranium and coextruded with Zircaloy-2 cladding. The tubes have an OD of 1.255 inches, ID of 0.435 inches, outer clad thickness of 0.036 inches, and inner clad of 0.027 inches. They are 14.940 inches long with 14.44 inches of uranium and 1/4-inch end caps on either end. The end caps are Zircaloy-2 and are welded to the ends of the counterbored tubes by the electron beam welding process. The tubes have Zircaloy-2 supports welded to the outer surface to maintain the outer annulus required for coolant. The components have been autoclaved 72 hours in 750 F steam to insure the integrity of the jacket and the welded closures. Figure 1 is a cross-section drawing of the elements and basket. Figure 2 is a photograph of the tubes after autoclaving.

[redacted]

IV. DESCRIPTION OF THE FUEL BASKET ASSEMBLY

The fuel assembly and basket assembly will be shipped from Hanford unassembled. A Hanford representative will assemble the experiment at the ETR site. The basket is fabricated from 0.032 inch thick 304 SS tubing and is 52-3/8 inches long. Two concentric tubes form the basket; the inner tube is 1.5 ID and the outer tube is 2-1/16 OD. The fuel is located in the inner tube. At design temperature and flow 60 gpm flows through the inner tube to cool the fuel element and 5 gpm flows through the basket-process tube annulus to cool the process tube. Details of the basket are shown on drawing H-3-9680.

Five thermocouples are installed in the basket assembly. Temperatures measured are inlet, outlet of outer fuel annulus at points 180° apart, outlet of the inner fuel bore, and bulk outlet.

V. THERMAL AND HYDRAULIC TABLE

TABLE I

THERMAL CONDITIONS FOR REACTOR LOOP FACILITY

Reactor Power Level, MW	175
Loop Flow Rate, lb/hr	26,850 (65 gpm at 435 F)
Loop Pressure, psia	2,000
Saturation Temperature of Loop Water, F	636
Inlet Water Temperature, F	435
Outlet Water Temperature, F	448

VI. THERMAL CHARACTERISTICS

The following table shows the thermal characteristics of the experiment as detailed by the calculations submitted in Appendix I of this document.

TABLE II

THERMAL CHARACTERISTICS OF EXPERIMENT

Total Heat Output of Fuel, KW		89.7
BTU/hr		306,000
Maximum Surface Heat Flux, BTU/hr-ft^2		
	1 - annulus	468,000
	2 - bore	580,000
Burnout Heat Flux, BTU/hr-ft^2		
	1 - annulus	3,380,000
	2 - bore	3,530,000
Maximum Clad Surface Temperature, F		
	1 - annulus	513
	2 - bore	512
Maximum Fuel Core Temperature, F		889
Average Burnup Rate, MW/Ton		9.96

[redacted]

VII. HAZARDS

Zircaloy-2 clad tubular elements have been irradiated successfully in Hanford reactors to high exposure in 445 F water. Intentional rupture tests of both high exposure and un-irradiated elements in the ETR have shown that corrosion rates are slow enough that they will not endanger the reactor or facility tube. All parts of the GEH-R3x3P7 Loop are fully instrumented. No unusual hazards are to be expected due to processing conditions of these elements. Both conditions of heat treatment have been previously irradiated.

VIII. TECHNICAL BASES FOR THE PROPOSED TEST

Previous irradiations of various geometries of Zircaloy-2 clad fuel, 7-rod clusters, KER tube and tube, and NPR inner tube, have been made with the fuel in a variety of heat treated conditions. This irradiation will compare the extreme conditions of grain size and quench rate considered for treatment of the NPR fuel.

IX. ASSEMBLY OF THE FUEL BASKET ASSEMBLY

The fuel basket is assembled by (1) inserting the fuel into the basket and (2) welding the top bail to the top ring.

Orient the fuel as follows and as shown in Figure 3.

> Numbers are stamped on one end of each element. Element number 61-61 corresponds to GEH-10-44 and element number 61-97 corresponds to GEH-10-45. Element number 61-97 is the bottom element; 61-61 the top element. Position the first number (in both cases a "6") on the same radius as the yellow line on the basket exterior.

X. CHARGE AND DISCHARGE PROCEDURE

Procedures for charging and discharging this experiment will be furnished under separate cover if necessary by J. H. Johnson, Hanford's resident representative to the ETR.

APPENDIX I

HEAT TRANSFER CALCULATIONS

I. SYMBOLS

A - Area (ft^2)

Cp - Specific heat (BTU/lb-°F)

D - Diameter (ft or in)

De - Equivalent diameter (ft)

e - The base of natural logarithms

E - Surface heat flux (BTU/hr-ft^2)

E_{BO} - Burnout heat flux (BTU/hr-ft^2)

G - Mass flow per unit area (lb/hr-ft^2)

h - Heat transfer coefficient (BTU/hr-ft^2-F)

H - Enthalpy of the liquid (BTU/lb)

K - Thermal conductivity (BTU/hr-ft-F)

L - Length of a fuel element or length of the fuel charge (ft)

m - Mass (gm/gm-atom)

N - Avogadro's number (6.02×10^{23} atom/gm-atom)

P - Total power generation (kw or BTU/hr)

Q - Specific power (kw/ft)

q - Specific power (watt/cm^3)

r - Radius (cm)

T - Temperature (°F)

V - Specific volume of the fuel (in^3/ft of tube)

v - Velocity (ft/sec)

w - Mass flow rate (lb/hr)

μ - Viscosity (lb/hr)

ρ - Density (lb/ft^3 or gm/cm^3)

Σ_f - Macroscopic fission cross section (cm^{-1})

σ_f - Microscopic fission cross section (cm^2)

ϕ - Volume average neutron flux in the fuel (nv or neutrons/cm^2-sec)

Subscripts following any of the above symbols will indicate the following:

a - Average

b - Bore (or inner surface of the fuel tube)

o - Outer surface or annulus around the fuel tube

p - peak or maximum value

t - total

II. HOT SPOT OR HOT CHANNEL FACTORS

	F_b	F_h	ΔT add
A. Mechanical Tolerances			
1. Effect on mass flow - external effects	1	1	
2. Effect on mass flow - entrance and exit effects	1	1	
3. Effect on mass flow - channel effects	1	1	
4. Effect of D variation	1	1.04	
B. Mechanical Distortion			
1. Effect of mass flow - external effects	1	1	
2. Effect on mass flow - entrance and exit effects	1	1	
3. Effect on mass flow - channel effects	1	1	
4. Effect of D variation	1.02	1.02	
C. Correlation equation on h	1	1.2	

[redacted]

[redacted]

DECLASSIFIED

	F_b	F_n	T add
D. Determination of Critical Parameters			
1. Flow measurements			
2. Temperature measurement	1.03	1.03	1.4
3. Pressure measurement			
4. Temperature measurements (coolant)	1	1	4.3
E. Flow Distribution Effects			
1. Plenum effects	1	1	
2. Edge effects	1	1	
F. Neutron and Gamma Flux Distribution			
1. Vertical distribution	1	1	
2. Horizontal distribution	1	1	
3. Internal distribution	1	1	
G. Neutron and Gamma Flux Uncertainty			
1. Unperturbed flux source	1	1	
2. Average depression	1	1	
3. Internal distribution	1	1	
4. Experimental power generation variation timewise	1.1	1.1	
H. Heat Flux over Element Surface			
1. Fuel homogeniety	1	1.02	
2. Mechanical effects	1	1	
I. Effects Peculiar to Experiment	1	1	
Products (total Δ T add)	1.16	1.47	5.7

[redacted]

III. CALCULATION OF FLUXES

$$\Sigma_f = \sigma_f \frac{\rho N}{m}$$

$$= \frac{4.2 \times 10^{-24} \frac{cm^2}{nucleus} \times 18.9 \frac{gm}{cm^3} \times 6.02 \times 10^{23} \frac{nuclei}{gm\text{-}atom}}{238 \frac{gm}{gm\text{-}atom}}$$

$$= 0.200 \text{ cm}^{-1}$$

The peak, axial, unperturbed flux in the GEH-R33P7 Loop is assumed to be 1.47×10^{14} nv.(1) The flux depression factor of 0.272 obtained from the 5th rupture experiment will be used. Then the peak, axial, perturbed flux will be:

$$1.47 \times 10^{14} \text{ nv} \times 0.272 = \underline{0.4 \times 10^{14}} \text{ nv.}$$

The correction for horizontal peaking at the reactor mid plane is 1.52.(1) Therefore, the absolute, peak, perturbed flux will be:

$$\phi_p = 0.4 \times 10^{14} \text{ nv} \times 1.52 = \underline{0.608} \times 10^{14} \text{ nv.}$$

The ratio of peak axial flux to average axial flux for this test will be 1.14.(1) Therefore, the average effective flux will be:

$$\phi_a = 0.4 \times 10^{14} \text{ nv} \times \frac{1}{1.14} = 0.351 \times 10^{14} \text{ nv.}$$

IV. POWER GENERATION

The peak specific power will be:

$$Q_p = \text{heat/fission} \times \Sigma_f \phi_p V$$

$$= 184 \frac{mev}{fission} \times 1.60 \times 10^{-16} \frac{kw\text{-}sec}{mev} \times 0.200 \frac{fission}{cm\text{-}neutron} \times 0.608 \times 10^{14} \frac{neutron}{cm^2\text{-}sec}$$

$$\times \frac{cm^3}{0.061 \text{ in}^3} \times \frac{\pi}{4} (\overline{1.183}^2 - \overline{0.489}^2) \times \frac{12 \text{ in}^3}{ft \text{ of tube}}$$

$$= \underline{64.5} \text{ kw/ft of tube}$$

---

(1) Call, R. L., and D. C. Kaulitz, "Proposal for Charging the Fifth Rupture Fuel Experiment: GEH 10, 34, 35," HW-66603, Aug. 25, 1960 (Confidential).

[redacted]

DECLASSIFIED

$$q_p = \frac{64500 \frac{\text{watt}}{\text{ft}} \times 0.061 \frac{\text{in}^3}{\text{cm}^3}}{\pi/4\,(1.183^2 - 0.489^2) \times 12 \frac{\text{in}^3}{\text{ft}}} = 358 \frac{\text{watt}}{\text{cm}^3}$$

The average specific power generation will be:

$$Q_a = \text{heat/fission} \times \Sigma_f \phi_a V$$

$$= 200\ 184 \frac{\text{mev}}{\text{fission}} \times 1.60 \times 10^{-16} \frac{\text{kw-sec}}{\text{mev}} \times 0.200 \frac{\text{fission}}{\text{cm-neutron}}$$

$$\times 0.351 \times 10^{14} \frac{\text{neutron}}{\text{cm}^2\text{-sec}} \times \frac{\text{cm}^3}{0.061\ \text{in}^3} \times \frac{\pi}{4}(1.183^2 - 0.489^2) \times 12 \frac{\text{in}^3}{\text{ft}}$$

$$= \underline{37.2}\ \text{k2/ft}$$

V. **FLOW IN THE VARIOUS CHANNELS**

$$D_e = \frac{4 \times \text{flow area}}{\text{wetted perimeter}}$$

$$\text{Annulus flow area} = \frac{\pi}{4}\left[\frac{(1.500)^2 - (1.255)^2}{144}\right]$$

$$= 0.00368\ \text{ft}^2$$

$$\text{Bore flow area} = \frac{\pi}{4} \times \frac{(0.435)^2}{144}$$

$$= 0.00103\ \text{ft}^2$$

$$\text{Wetted perimeter of annulus} = \frac{\pi}{12}(1.500 + 1.255)$$

$$= 0.720\ \text{ft}$$

$$D_{e_a} = \frac{4 \times (0.00368)\ \text{ft}^2}{0.720\ \text{ft}} = 0.0205\ \text{ft}$$

$$D_{e_b} = \frac{0.435\ \text{ft}}{12} = 0.03625\ \text{ft}$$

Assume a total flow of 65 gpm at an inlet temperature of 435 F. Assume 60 gpm to flow through the basket and 5 gpm around it. ?

[redacted]

$$\text{Total mass flow} = \frac{61\ \text{gal}}{\text{min}} \times \frac{0.134\ \text{ft}^3}{\text{gal}} \times \frac{60\ \text{min}}{\text{hr}} \times \frac{52.2\ \text{lb}}{\text{ft}^3}$$

$$= 25{,}600\ \text{lb/hr}$$

$$W_t = \text{Flow through the basket} = \frac{60\ \text{gal}}{\text{min}} \times \frac{0.134\ \text{ft}^3}{\text{gal}} \times \frac{60\ \text{min}}{\text{hr}} \times \frac{52.2\ \text{lb}}{\text{ft}^3}$$

$$= 25{,}200\ \text{lb/hr}$$

The relative flows through the bore and annulus can be calculated by means of the following equations:(1)

$$V_tA_t = V_oA_o + V_bA_b = 60\ \text{gal/min.}$$

$$\frac{V_o^{1.8}}{De_o^{1.2}} = \frac{V_b^{1.8}}{De_b^{1.2}}$$

Then

$$V_o^{1.8} = \left(\frac{De_o}{De_b}\right)^{1.2} V_b^{1.8}$$

$$V_o = V_b \left(\frac{De_o}{De_b}\right)^{\frac{1.2}{1.8}} = V_b \left(\frac{0.0205}{0.3625}\right)^{2/3} = 0.683\ V_b$$

Then $0.683\ V_bA_o + V_bA_b = 60\ \text{gal/min.}$

$$V_b = \frac{60\ \text{gal/min}}{0.683\ A_o + A_b} = \frac{60}{0.683\ (0.00368) + 0.00103\ \text{ft}^2}$$

$$V_b = 16{,}950\ \text{gal/min ft}^2$$

$$V_b = \frac{16{,}950\ \text{gal}}{\text{min ft}^2} \times \frac{0.134\ \text{ft}^3}{\text{gal}} \times \frac{\text{min}}{60\ \text{sec}} = 37.9\ \text{ft/sec.}$$

$$V_o = 0.683\ V_b = 25.9\ \text{ft/sec.}$$

$$W_o = V_oA_o = \frac{25.9\ \text{ft}}{\text{sec}} \times 0.00368\ \text{ft}^2 \times 3600\ \frac{\text{sec}}{\text{hr}} \times 52.2\ \frac{\text{lb}}{\text{ft}^3}$$

$$W_o = 17850\ \text{lb/hr.}$$

---

(1) HW-66603

$$W_b = V_b A_b = 37.9 \frac{ft}{sec} \times 0.00103\ ft^3 \times 3600 \frac{sec}{hr} \times 52.2 \frac{lb}{ft^3}$$

$$W_b = 7320\ lb/hr.$$

$$G_o = \frac{W_o}{A_o} = \frac{17850\ lb/hr}{0.00368\ ft^2} = 4.85 \times 10^6\ lb/hr\text{-}ft^2$$

$$G_b = \frac{7320\ lb/hr}{0.00103\ ft^2} = 7.10 \times 10^6\ lb/hr\text{-}ft^2$$

VI. HEAT SPLIT

The method developed by Geering(2) was used to calculate the heat split. The figures thus obtained were adjusted by trial and error so that the core temperature obtained by calculating from the outer surface inward was within a few degrees of the value obtained by calculating from the bore inward. The values chosen were 70 per cent to the outer surface and 30 per cent to the inner surface.

VII. MAXIMUM COOLANT ΔT's

Top of first fuel element to reactor mid-plane.
Assume the inlet temperature of 435 F, and assume the average water temperature along the maximum power generation line between the top and the mid-plane in the annulus is 440 F. The Cp = 1.09 BTU/lb-F.

$$\Delta T_o = \frac{0.700}{17{,}850\ lb} \times \frac{64.5\ kw}{1.14\ ft} \times \frac{14.44\ in}{12\ in}\ ft \times \frac{3413\ BTU\ hr\ lb\ F}{kw\ hr\ 1.09\ BTU}$$

$$\Delta T_o = 8.35\ F$$

With F_b correction $\Delta T_o = 8.35 \times 1.16 = 9.7$ F.

Assume that in the bore the average water temperature will be 440 F. Then Cp = 1.09 BTU/lb-F.

$$\Delta T_b = \frac{0.300}{7320\ lb} \times \frac{64.5\ kw}{1.14\ ft} \times \frac{14.44\ in}{12\ in}\ ft \times \frac{3413\ BTU\ hr\ lb\ F}{kw\ hr\ 1.09\ BTU}$$

$$\Delta T_b = 8.74\ F$$

With F_b correction $\Delta T_b = 8.74 \times 1.16 = 10.1$ F.

---

(2) Geering, G. T., "Tubular Fuel Elements, Part One, Operation of Prototype Elements in the ETR Hanford Loop," HW-59940, April 9, 1959 (Confidential).

VIII. WATER FILM COEFFICIENTS

The modified Colburn Equation(3) is:

$$\frac{hDe}{(K)_f} = 0.023 \left(\frac{DeG}{\mu}\right)_f^{0.8} \left(\frac{Cp\mu}{K}\right)_f^{0.3}$$

Where $(\ )_f$ indicates that all physical properties within the parentheses are evaluated at the film temperature.(4) The equation can be rewritten as follows:

$$h = \frac{0.023\ (K)_f}{De} \left(\frac{DeG}{\mu}\right)_f \left(\frac{Cp\mu}{K}\right)^{0.3}$$

Assume a film temperature at the reactor midplane in the annulus of 500 F.

Then Cp = 1.16 BTU/lb-F

K = 0.35 BTU/hr-ft-F

ρ = 48.8 lb/ft^3

μ = 0.25 lb/hr-ft

$$h_o = \frac{0.023 \times 0.35\ \text{BTU}}{0.0205\ \text{ft hr ft °F}} \left(\frac{0.0205\ \text{ft} \times 4.85 \times 10^6\ \text{lb hr ft}}{0.25\ \text{lb hr ft}^2}\right)^{0.8}$$

$$\times \left(\frac{1.16\ \text{BTU} \times 0.25\ \text{lb hr ft F}}{\text{lb F hr ft } 0.35\ \text{BTU}}\right)^{0.3}$$

$$h_o = \frac{0.392\ \text{BTU}}{\text{hr ft}^2\ °\text{F}} \quad (397 \times 10^3)^{0.8} \quad (0.828)^{0.3}$$

$$h_o = (0.392)(120)(250)(0.945) = \underline{11{,}100}\ \text{BTU/hr ft}^2\ °\text{F}.$$

Assume a film temperature in the bore at the reactor midplane of 500 F. Then:

$$h_b = \frac{0.023 \times 0.35}{0.03625} \left(\frac{0.03625 \times 7.10 \times 10^6}{0.25}\right)^{0.8} \left(\frac{1.16 \times 0.25}{0.35}\right)^{0.3}$$

---

(3) Nertney, R. J., "Calculated Surface Temperatures for Nuclear Systems and Analysis of Their Uncertainities," IDO-16343, June 1, 1957 (Unclassified).

(4) Film temperature equals the average of local bulk water temperature and heat generating surface temperature.

$h_b = (0.222)(1.03 \times 10^6)^{0.8} (0.828)^{0.3}$

$h_b = \underline{13,650}$ BTU/hr ft^2 F.

IX. **ΔT's ACROSS THE COOLANT FILM**

$$\Delta T_o = \frac{0.700\ Q_o}{h\ A_o}$$

$$\Delta T_o = \frac{(0.700)(64.5\ \text{kw})(3413\ \text{BTU})\ \text{hr ft}^2\ \text{F ft} \times 144\ \text{in}^2}{11,100\ \text{BTU ft kw-hr}\ (\pi \times 1.255\ \text{in} \times 12\ \text{in ft}^2)}$$

$\Delta T_o = 42.1$ F.

With F_h correction $\Delta T_o = 42.1 \times 1.47 = \underline{62\ F}$

$$\Delta T_b = \frac{(0.300)(64.5)(3413)(144)}{(13650)\ (\pi)\ (0.435)(12)}$$

$\Delta T_b = 42.5$ F

With F_h correction $\Delta T_b = 42.5 \times 1.47 = 63$ F

X. **ΔT's ACROSS THE CLADS**

Assume that at the reactor midplane the average temperature of the outer jacket at the peak power point is 560 F.

$K_{Zr-2} = 8.16$ BTU/hr-ft-°F

$$\Delta T_o = \frac{0.7 \times Q_p \times \ln \frac{D_o}{D_b}}{2\pi K}$$

$$\Delta T_o = \frac{(0.7)(64.5\ \text{kw})(3413\ \text{BTU}) \times \ln\left(\frac{1.255}{1.183}\right)\ \text{hr ft °F}}{2\pi\ \text{ft kw-hr}\ 8.16\ \text{BTU}}$$

$$\Delta T_o = 3010 \ln\left(\frac{1.255}{1.183}\right) = 3010 \ln 1.06$$

$\Delta T_o = 175$ F

Assume that at the bore the average temperature is 560 F. Then $K_{Zr-2} = 8.16$ BTU/hr-ft-°F.

$$\Delta T_b = \frac{(0.3)(64.5)(3413) \ln\left(\frac{0.489}{0.435}\right)}{2\pi\ (8.16)}$$

$$\Delta T_b = 1290 \ln 1.124 = 1290\ (0.11689)$$

$$\Delta T_b = 151\ F$$

XI. **BOND LAYER ΔT's**

Assume h = 30,000 BTU/hr-ft^2 F for the bond layer.

$$\Delta T_o = \frac{0.7 \times Q_p}{h\ A_o} = \frac{0.7 \times 64.5\ kw \times 3413\ BTU\ hr\ ft^2\ F\ 144\ in^2 \times 1\ ft}{30{,}000 \times BTU\ ft\ kw\text{-}hr\ \pi \times 1.183 \times 12\ in\ ft^2\ in}$$

$$\Delta T_o = 16.5\ F$$

$$\Delta T_b = \frac{(0.3)(64.5)(3413)(144)}{30{,}000\ \pi\ (0.489)(12)}$$

$$\Delta T_b = 17.2\ F$$

XII. **ΔT ACROSS THE CORE**

Geering(2) has developed the following equation for calculating the temperature drop through a tubular fuel element:

$$\Delta T = \frac{q}{4K}\left\{\frac{r_o^2 - r_b^2}{\ln \frac{r_o}{r_b}} \ln\left(\frac{\sqrt{\frac{r_o^2 - r_b^2}{2 \ln \frac{r_o}{r_b}}}}{r_o}\right) + r_o^2 - \frac{r_o^2 - r_b^2}{2 \ln \frac{r_o}{r_b}}\right\}$$

Assume an average core temperature of 800 F. Then $K_{uranium}$ = 19.5 BTU/hr-ft-F = 0.187 $\frac{watt}{cm\text{-}°F}$

$$r_o = \frac{1.183}{2}\ in \times 2.54\ \frac{cm}{in} = 1.505\ cm$$

$$r_b = \frac{0.489}{2}\ in \times 2.54\ \frac{cm}{in} = 0.621\ cm$$

$$q_p = 358\ \frac{watts}{cm^3}$$

$$\Delta T = \frac{358\ watts\ cm\ F}{4 \times 0.187\ watt\ cm^3}\left\{\frac{(1.505)^2 - (.621)^2}{\ln \frac{1.505}{0.621}} \ln\left(\frac{\sqrt{\frac{(1.505)^2 - (0.621)^2}{2 \ln \frac{1.505}{0.621}}}}{1.505}\right) + (1.505)^2 - \frac{(1.505)^2 - (0.621)^2}{2 \ln \frac{1.505}{0.621}}\right\}$$

[redacted]

ΔT = 185 F

XIII. TEMPERATURE DISTRIBUTIONS

At Reactor Midplane - From Outside.

	Uncorrected Temperature	Corrected Temperature
Inlet Temperature	435	435
max ΔT to midplane	8	10
Max. Local Water	443	445
Film ΔT	42	62
	485	507
ΔT add.	0	6
Clad Surface Temp.	485 ✓	513 ✓
Clad ΔT	175	175
Bond Layer Surface Temp.	660	688
Bond ΔT	16	16
Uranium Surface Temp.	676	704
Core ΔT	185	185
Core Temperature	861	889

At Reactor Midplane - From Bore.

Inlet Temperature	435	435
max ΔT to midplane	9	10
Max. Local Water Temp.	444	445
Film ΔT	42	63
	486 ✓	508
ΔT add.	0	6
Clad Surface Temp.	485	514
Clad ΔT	151	151
Bond Layer Surface Temp.	637	665
Bond ΔT	17	17
Uranium Surface Temp.	654	682
Core ΔT	185	185
Core Temperature	839	867

XIV. TOTAL HEAT OUTPUT

$$P_t = Q_a L = \frac{37.2 \text{ kw} \times 3413 \text{ BTU} \times 28.88 \text{ in ft}}{\text{ft kw hr} \quad 12 \text{ in}} = 89.7 \text{ kw} \times 3413 \frac{\text{BTU}}{\text{kw hr}}$$

$$= 306{,}000 \text{ BTU/hr.}$$

XV. BULK COOLANT ΔT

Assume an average bulk temperature of 435 + 10 = 445 F
C_p = 1.09 BTU/lb F

$$\Delta T = \frac{P_t}{W_t \; C_p} = \frac{306{,}000 \text{ BTU hr lb } ^\circ\text{F}}{25200 \text{ hr lb } 1.09 \text{ BTU}}$$

ΔT = 11.1 F

Using F_b correction: T = 11.1 x 1.16 = 13 F

XVI. MAXIMUM SURFACE HEAT FLUXES

$$E = \frac{Q}{A}$$

$$E_o = \frac{0.700 \; Q_p}{A_o} = \frac{0.700 \times 64.5 \text{ kw} \times 3413 \text{ BTU } 144 \text{ in}^2 \text{ ft}}{\pi (1.255) \text{ ft} \quad \text{kw-hr in} \times 12 \text{ in ft}^2}$$

E_o = 468,000 BTU/hr-ft^2

$$E_b = \frac{0.3 \times 64.5 \times 3413 \times 144}{0.435 \times \pi \times 12}$$

E_b = 580,000 BTU/hr-ft^2

XVII. BURN-OUT HEAT FLUXES

DeBartoli, et. al.(5) give the following equation for calculating burn-out heat fluxes:

$$\frac{E_{BO}}{10^6} = 0.182 \left(\frac{H}{10^3}\right)^{-2.5} \left(1 + \frac{G}{10^7}\right)^2 e^{-0.0012 \, L/De}$$

For the annulus

$$\left(\frac{H}{10^3}\right)^{-2.5} = \left(\frac{455}{10^3}\right)^{-2.5} = \frac{1}{0.139}$$

---

(5) DeBartoli, R. A., et. al., Forced-Connection Heat Transfer Burn-Out Studies for Water in Rectangular and Round Tubes at Pressures above 500 psia, WAPD-188, Oct. 1958.

$$\left(1 + \frac{6}{10^7}\right)^2 = \left(1 + \frac{4.85 \times 10^6}{10^7}\right)^2 = 2.97$$

$$e^{-0.0012\ L/De} = e^{-0.0012\ \frac{2.41}{0.0205}} = e^{-0.14} = \frac{1}{1.150}$$

$$E_{BO} = 0.182\left(\frac{1}{0.139}\right) \times (2.97) \times \frac{1}{1.150} \times 10^6 = \underline{3,380,000}\ \text{BTU/hr-ft}^2$$

<u>For the bore</u>

$$\left(\frac{H}{10^3}\right)^{-2.5} = \left(\frac{455}{10^3}\right)^{-2.5} = \frac{1}{0.139}$$

$$\left(1 + \frac{6}{10^7}\right)^2 = \left(1 + \frac{7.10 \times 10^6}{10^7}\right)^2 = 2.92$$

$$e^{-0.0012\ L/De} = e^{-0.0012\ \frac{2.41}{0.03625}} = e^{-0.08} = \frac{1}{1.083}$$

$$E_{BO} = \frac{1}{0.139} \times \frac{0.182 \times 2.92 \times 10^6}{1.083} = \underline{3,530,000}\ \text{BTU/hr-ft}^2$$

XVIII. FUEL WEIGHT

$$\text{Fuel weight per inch} = \frac{\pi}{4}\left(1.183^2 - 0.489^2\right) \frac{\text{in}^3}{\text{in}} \ \frac{\text{cm}^3}{0.061\ \text{in}^3} \times \frac{18.9\ \text{gm}}{\text{cm}^3}$$

$$= 283\ \text{grams/inch}$$

$$\text{Total weight} = 283\ \frac{\text{gms}}{\text{in}} \times 28.88\ \text{inch} = 8180\ \text{grams}$$

$$= 18.04\ \text{pounds}$$

XIX. AVERAGE BURNUP RATE

$$\text{Average burnup rate} = \frac{P_t}{\text{wt of fuel}}$$

$$= \frac{89.7\ \text{MW}\ \ \text{Kg} \times 2000\ \text{lb}}{10^3 \times 8.18\ \text{Kg} \times 2.2\ \text{lb ton}}$$

$$= 9.96\ \frac{\text{MW}}{\text{ton}}$$

RSK:FEY:bo

[redacted]

THERMOCOUPLE IDENTIFICATION		
T.C. NO.	LOCATION	COLOR
1	UPSTREAM	YELLOW
2	OUTLET INNER BORE	GREEN
3	OUTLET BASKET-FUEL ANNULUS TOWARD REACTOR CENTER	WHITE
4	OUTLET BASKET-FUEL ANNULUS AWAY FROM REACTOR CENTER	BLUE
5	BULK OUTLET	RED

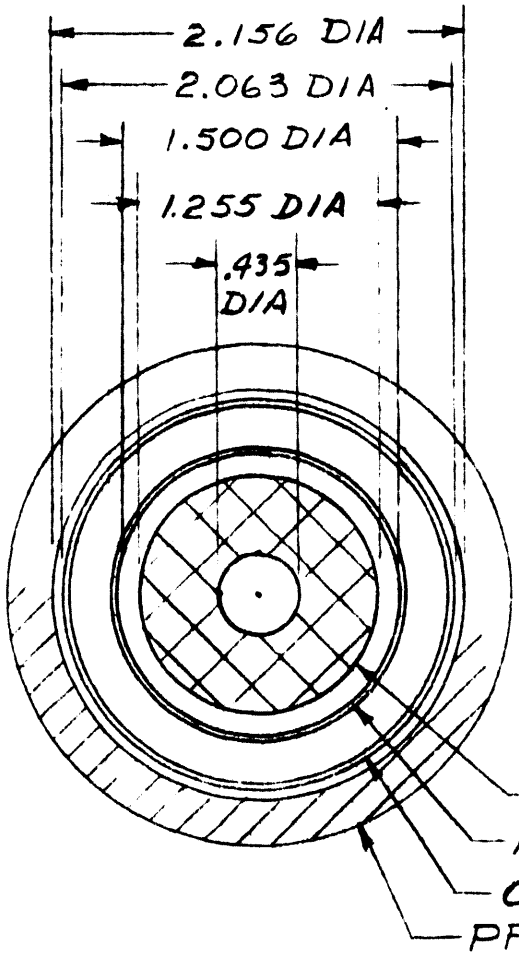

CROSS-SETION AT MIDPLANE

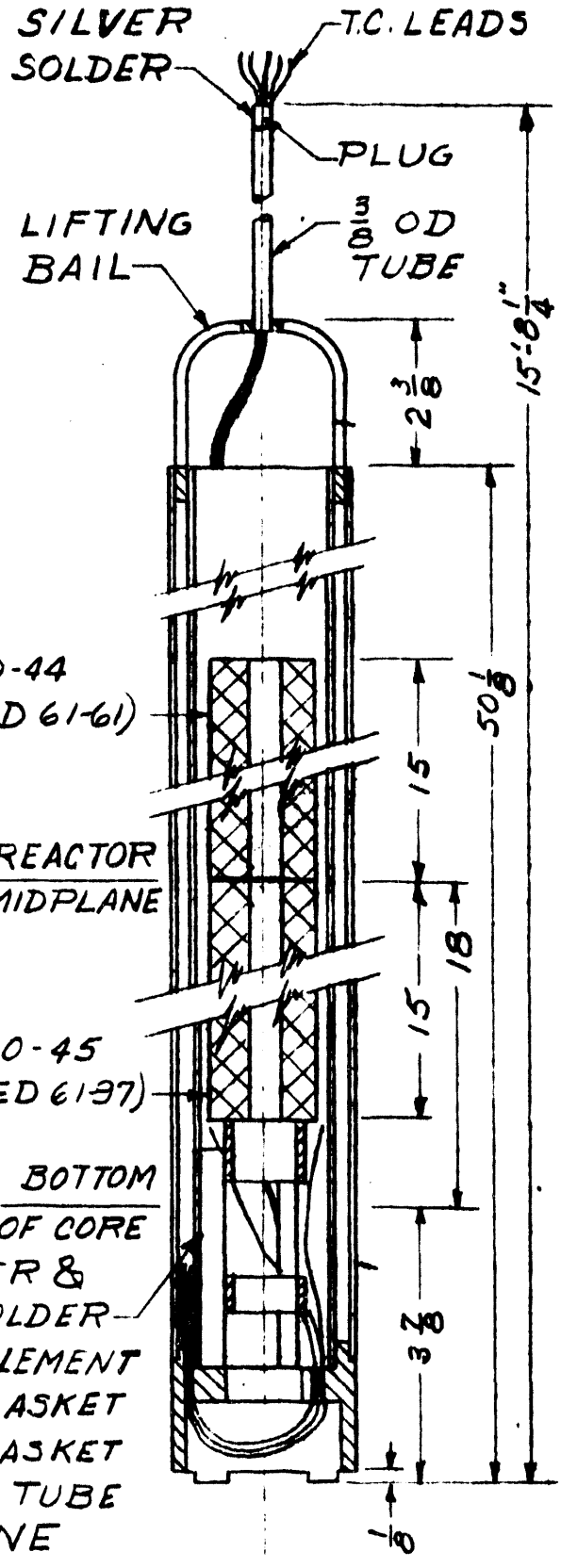

FIG 1

GEH 10-44 & 45 FUEL BASKET ASSEMBLY

NONE - CLASSIFIED BY J. Young 1-16-61

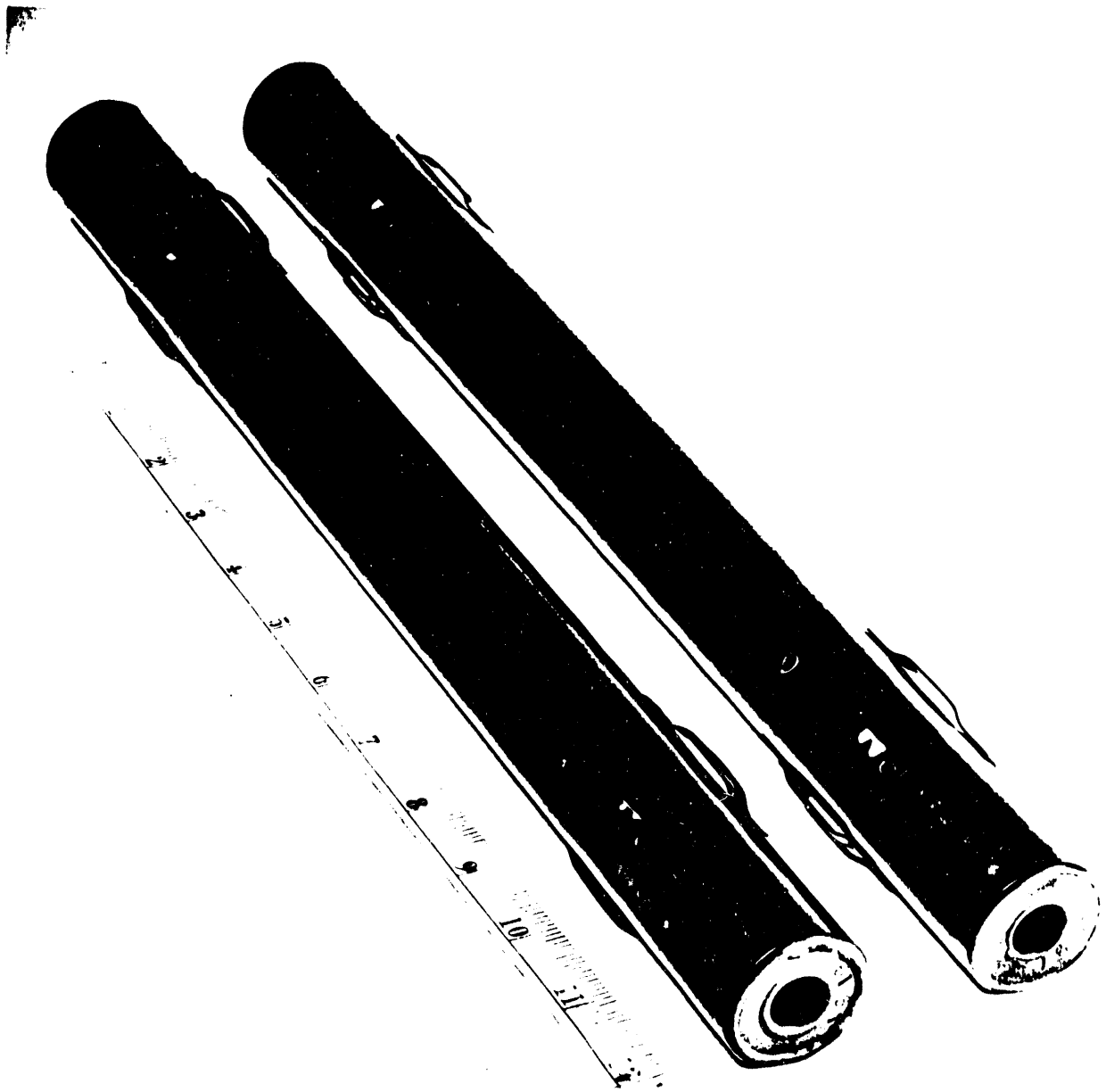

FIGURE 2
Complete Fuel Elements

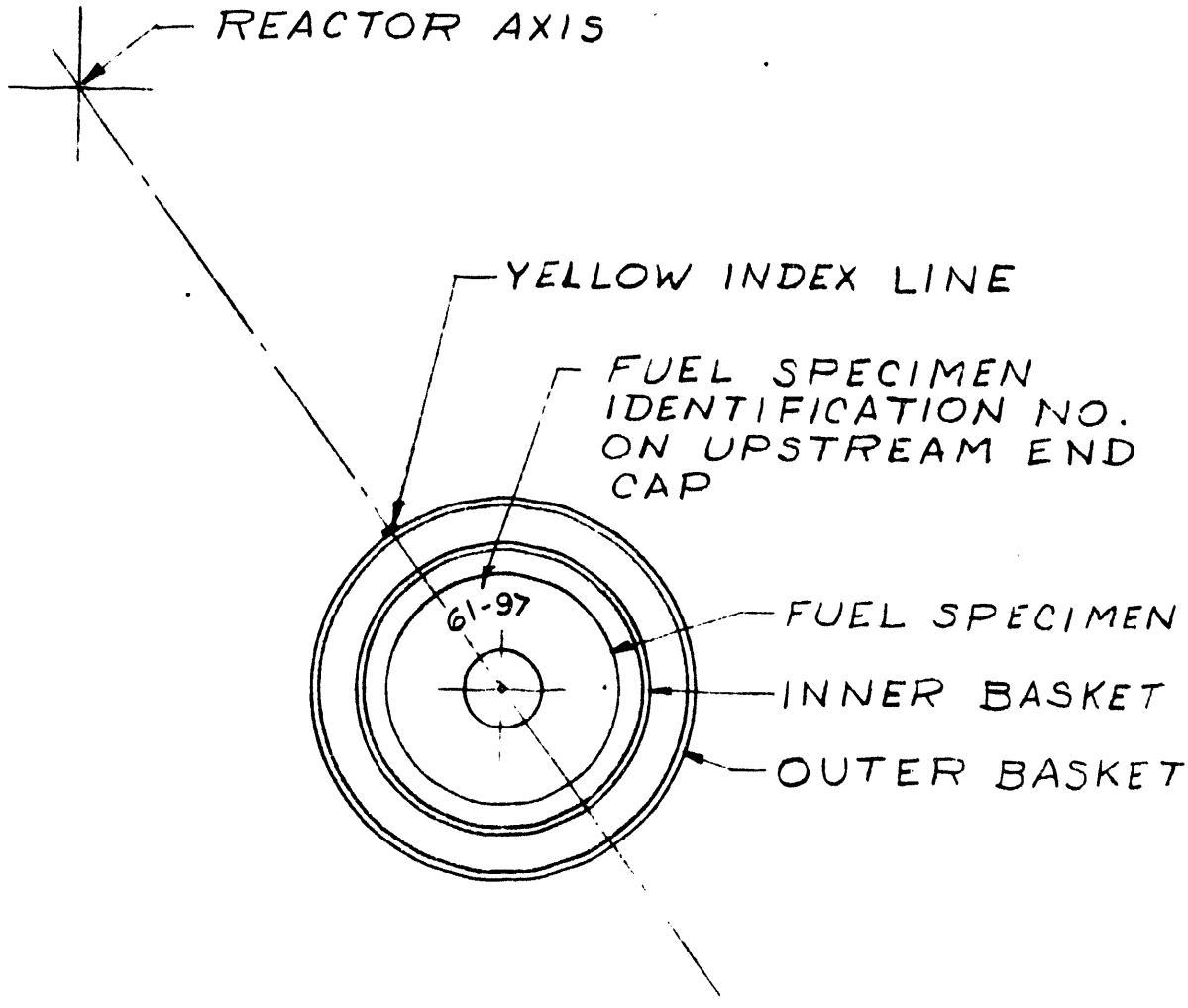

SPECIMEN INDEXING FOR GEH-10-44 & 45 EXPERIMENT

FIG 3

NONE - CLASSIFIED BY [illegible] 1-[illegible]

DATE FILMED

6/16/94

END