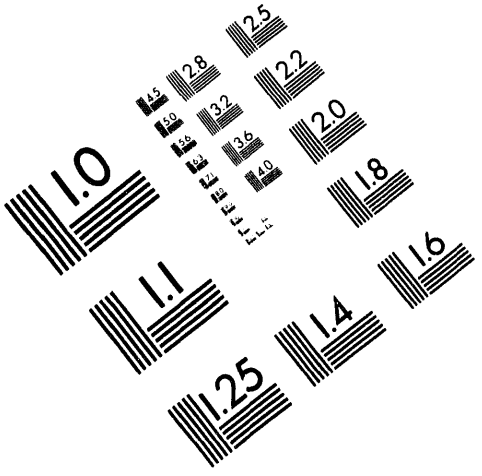

Association for Information and Image Management

1100 Wayne Avenue, Suite 1100
Silver Spring, Maryland 20910

301/587-8202

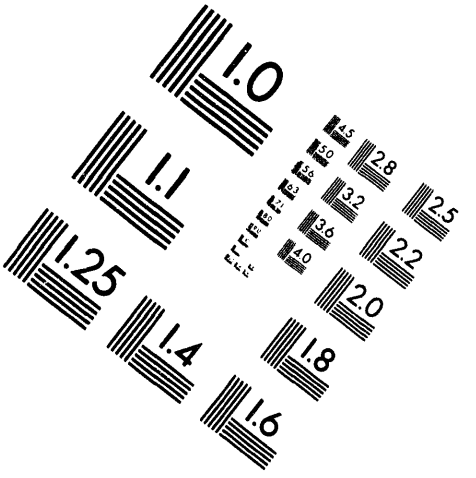

Centimeter

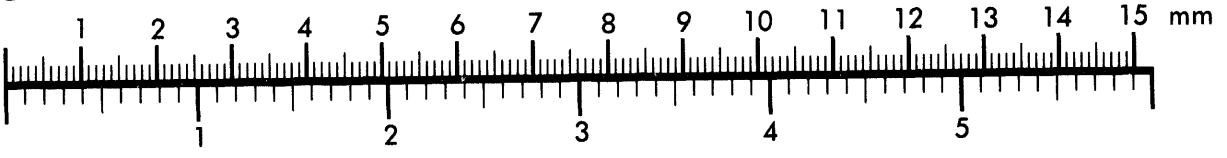

Inches

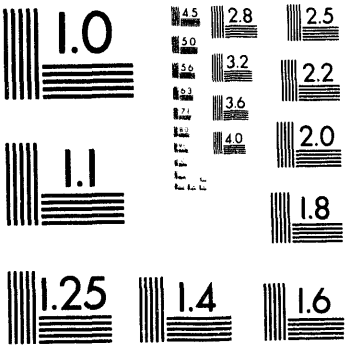

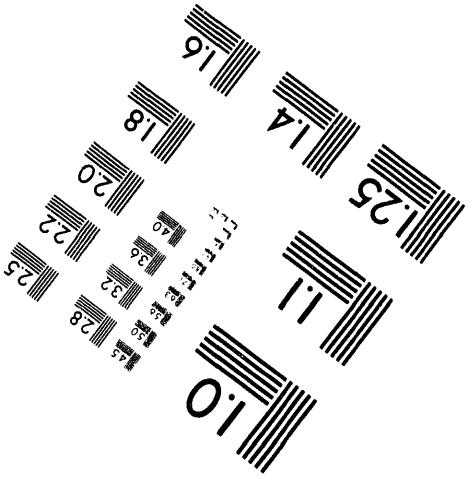

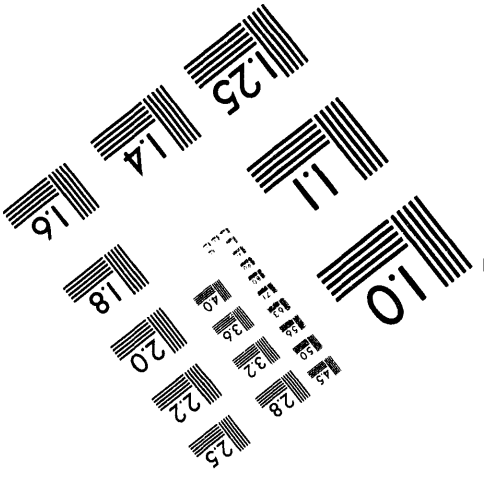

MANUFACTURED TO AIIM STANDARDS
BY APPLIED IMAGE, INC.

1 of 1

PNL-9412
UC-600

Experimental Plan and Construction Guidance for Hanford Protective Barrier Test at Hill AFB, Utah

R. R. Kirkham
G. W. Gee

April 1994

Prepared for
the U.S. Department of Energy
under Contract DE-AC06-76RLO 1830

Pacific Northwest Laboratory
Richland, Washington 99352

MASTER

Summary

Permanent isolation surface barriers are needed to fully isolate buried waste materials for long periods of time from the general environment. Multi-layer surface barriers that use natural earthen materials overlying bio-intrusion layers of rock and/or asphalt are expected to reduce infiltration or deep percolation to less than 0.5 mm (0.02 in.) of water. The layering also reduces root penetration, preventing uptake and translocation of hazardous materials to the surface vegetation.

The development of these surface barriers is outlined in the *Permanent Isolation Surface Barrier Development Plan* (Wing 1994). It is necessary to document the effectiveness of the barriers in the Hanford Site environment as it is now, and as it would be, under a wetter environment (a possibility from historical climate analysis and projected by some global climate change scenarios) that stresses the barrier.

The opportunity exists to test the Hanford Barrier in a wetter, colder climate at an existing lysimeter facility located at Hill Air Force Base near Salt Lake, Utah. The use of an existing lysimeter facility simplifies the construction effort and allows comparison of the Hanford Protective Barrier with an existing U.S. Environmental Protection Agency-Resource Conservation and Recovery Act clay cap already undergoing tests at the lysimeter site. This document presents the experimental plan for testing the Hanford Protective Barrier in a wetter, colder climate.

Contents

Summary iii

1.0 Introduction 1.1

2.0 Research Objective 2.1

3.0 Site Description 3.1
3.1 General Location Description 3.1
3.2 Existing Lysimeter Description 3.1

4.0 Lysimeter Design 4.1

5.0 Construction 5.1
5.1 Lysimeter Step-by-Step Construction 5.1

6.0 Measurement Program 6.1
6.1 Instrumentation 6.1
6.2 Data Base 6.3
6.3 Quality Assurance 6.3

7.0 References 7.1

Figures

3.1 Map of Hill Air Force Base near Ogden, Utah 3.2

3.2 Perspective View of New Hanford Barrier Lysimeter (HPB) and Existing EPA-RCRA Lysimeters 3.3

3.3 View of Hill AFB, Utah, Lysimeters, Looking North 3.3

4.1 MathCad File of Dimensions and Volume Calculations for Lysimeter Layers 4.2

4.2 Lysimeter Layers 4.3

5.1 Plan View of Lysimeter Construction Drawings 5.2

5.2 Elevation View of Lysimeter Construction Drawings 5.3

Tables

6.1 Instrumentation Measurement Capabilities 6.2

1.0 Introduction

Permanent isolation surface barriers have been proposed as physical barriers designed to prevent transport of hazardous waste out of confinement into the general environment. Transport pathways that are addressed by the barrier include water infiltration, biointrusion, wind and water erosion, human excavation, and gaseous release. Permanent isolation barriers are needed for final disposal of several types of radioactive waste forms found on the Hanford Site in southeastern Washington. This geographical region lies in the rain shadow of the Cascade Mountains and precipitation averages 160 mm (6.30 in.) per year. The Hanford Site is a cold desert with most of the precipitation occurring during the winter months. Long-term hydrologic simulation reported in the *Final Environmental Impact Statement for the Disposal of Hanford Defense High-Level, Transuranic, and Tank Wastes* (DOE 1987), indicates the need to limit infiltration to 0.05 cm (0.2 in.) per year.

Lysimeter studies (Gee et al. 1993a) testing the barrier design have been under way for over 6 years. The barrier proved effective under natural and 2 times normal precipitation. Drainage was only observed on the non-vegetated treatment when precipitation was elevated to 3 times normal. These lysimeter tests are not fully representative of a wetter climate for three reasons. First, the irrigated area of the lysimeter complex is small and advection of sensible heat (warm, dryer air) may artificially elevate the evapotranspiration rate associated with the irrigated treatments. Secondly, the application of irrigation does not simultaneously reduce the solar radiation as would be typical of rainfall and the associated cloud cover. The third inadequacy deals with the form of the added precipitation. The lysimeters have received additions of above-normal precipitation as a liquid (irrigation), not as a solid (snowfall). Snow will not infiltrate until it melts, allowing time for sublimation to return water to the atmosphere reducing the amount of water entering the soil profile.

Therefore, the Hanford Site, with a dryer climate either slightly warmer or cooler, will have less water available for deep recharge. Likewise, a wetter and warmer climate will have less drainage than a wetter, colder climate. This analysis indicates, for climatic change testing, the wetter colder climate would be the worst-case test. Such testing can best be achieved by placing a test lysimeter in an area with a wetter, colder climate. Testing of the Hanford Protective Barrier under a wetter climate is more realistic than the supplemental irrigation treatments at the Field Lysimeter Test Facility (FLTF), located on the Hanford Site, where "oasis effects" (an elevated rainfall environment may be adversely affected by horizontal transport of energy from the surrounding larger natural environment) may have increased evapotranspiration above normal.

Development of a plan to test the Hanford Protective Barrier in a wetter environment is an important task objective designed to complement the current work at the Hanford Site on surface barrier development (DOE 1993; Wing 1994). This experimental plan describes the testing of the capillary barrier component of the Hanford Protective Barrier in a wetter climate (northeastern Utah) with three times the average annual Hanford snowfall. Other barrier designs have been tested at this site [Hill Air Force Base (Hill AFB)] since 1989, and significant drainage occurs in these lysimeters under ambient (non-irrigated) levels of precipitation (Hakonson et al. 1993).

The Hanford Protective Barrier is an aboveground cover system, designed to isolate buried hazardous materials from the environment. The current (1993) configuration provides a robust

multi-purpose barrier designed to limit percolation and biotic intrusion. The major features of this barrier include a capillary-barrier (i.e., silt loam over coarse sand/gravel), bio-intrusion resistant rock sublayers, and a low-permeability asphalt layer (Gee et al. 1993a).

The surface silt loam soil layer acts as a hydrologic barrier by storing annual precipitation until it can be removed through soil evaporation and water loss through plant leaves (transpiration). The combined water loss, termed evapotranspiration (ET), is a critical component of the barrier water balance. With proper design, barrier ET can annually match precipitation, provided there is an adequate storage capacity in the soil. To reduce drainage and effectively increase the storage capacity of the silt loam soil, sublayers of coarse sands and gravels are included. Redistribution of soil water in response to gravity slows as soil water content decreases or the conductivity of the medium decreases. The addition of coarse sand and gravel layers creates a hydrological barrier to unsaturated flow because the coarse materials conduct less water than the finer soil at water contents less than saturation. Below the gravel layer, a bio-intrusion barrier is included that is constructed from large rocks which are not readily removed by people or animals. Large rocks have such low water holding capacities that roots are not expected to penetrate or maintain a viable root system in an arid or semi-arid environment. In the complete implementation of the Hanford Protective Barrier, a second hydrologic barrier is included consisting of a layer of low-permeability asphalt.

Construction is expected to begin on a large 2.5-ha (6.17-ac) test barrier at the Hanford Site in early 1994. Prototype testing will include studies of water balance, wind and water erosion, and biointrusion (Gee et al. 1993b). Concurrently, as described in this test plan, a large-scale lysimeter [5 by 10 m (16.4 by 32.8 ft)] will be constructed at Hill AFB using the same soils, plant species, surface soils, and medium-sized coarse layers, but subjected to a climate which has three times the average annual precipitation arriving predominately as winter snow. The asphalt and bio-intrusion rock layers will not be included in this lysimeter.

This experimental plan presents the construction, instrumentation, and measurement program for this large-scale lysimeter. The test of the Hanford Protective Barrier at Hill AFB will be documented carefully and lysimeter results will be compared with ongoing monitoring of a U.S. Environmental Protection Agency (EPA) Resource Conservation Recovery Act (RCRA) cap already existing in a similar lysimeter at this site. The comparison of the Hanford design and the RCRA cap will provide a measure of equivalency between the two cap designs under Hill AFB environmental conditions.

2.0 Research Objective

This experiment is directed at measuring the effectiveness of the Hanford Protective Barrier in preventing drainage of annual precipitation under a wetter and colder climate scenario. Previously, this condition has been simulated by increasing precipitation amounts through the application of supplemental irrigation at the FLTF and the Small Tube Lysimeter Facility, also located on the Hanford Site. During these applications, there has been no attempt to reduce the solar radiation and air temperatures or increase ambient vapor pressures. Such changes in environmental variables can be expected in association with increased precipitation in a wetter, colder climate. Note that evapotranspiration is, in part, controlled by available energy (air temperatures and solar radiation) and vapor pressure gradients, and that the previously mentioned adjustments to these driving forces will tend to decrease evapotranspiration rates.

By testing the Hanford Protective Barrier at Hill AFB, we will effectively simulate a climatic change without costly environmental modification. In addition, the existence of the RCRA cap will allow direct comparison of the two barrier designs under the same climatic conditions.

3.0 Site Description

3.1 General Location Description

The Hill AFB is located in northeast Utah (Figure 3.1), in the southwest part of the Weber Delta District with portions of the base in both Weber County and Davis County. The base is situated on a broad plateau between the Great Salt Lake and the Weber River Valley. The plateau is part of the Weber Delta, formed as the Weber River flowed into Lake Bonneville [ancient Pleistocene lake with stable elevations of 1585 and 1463 m (5200 and 4800 feet)]. Surface soils are generally loamy fine sand or fine loamy sand. The soils are deep and well drained.

Summer weather is hot and dry [maximum temperature 40°C (104°F)], and winters are cold with a generally stagnant air mass [minimum temperature -81°C (-13°F)]. Annual average rainfall is 48.8 m (19.2 in.) and annual average snowfall is 182.4 cm (71.8 in.).

3.2 Existing Lysimeter Description

In 1989, Los Alamos National Laboratory (LANL) built four lysimeters at Hill AFB. The four lysimeters contained the following treatments: a typical soil cover acting as a baseline, a modified (EPA-RCRA) cover, and two versions of a LANL design using vegetation cover to enhance evapotranspiration and a capillary barrier to divert downward flow of water (Hakonson et al. 1993). Three of the lysimeters contained sloping layered soils designed to divert moisture horizontally. The fourth lysimeter, and the only one which will remain intact, is a soil overlaying compacted clay, representative of an EPA-RCRA cap. The location of the new lysimeter relative to the existing lysimeters is shown in Figure 3.2. The lysimeter area is shown in Figure 3.3 as it appeared in September 1993 as LANL staff were removing their equipment from the site.

The EPA-RCRA cap design consisted of 120 cm (47.3 in.) of topsoil over 30 cm (11.8 in.) of a sand drainage layer over 60 cm (23.6 in.) of a clay loam amended with bentonite and compacted to 1.76 g/cm^3. As reported in Hakonson et al. (1993), the saturated hydraulic conductivity of the clay layer was $3.4*10^{-6}$ cm/sec (standard deviation = $1.81*10^{-6}$ cm/sec) rather than the EPA recommendation of 10^{-7} cm/sec.

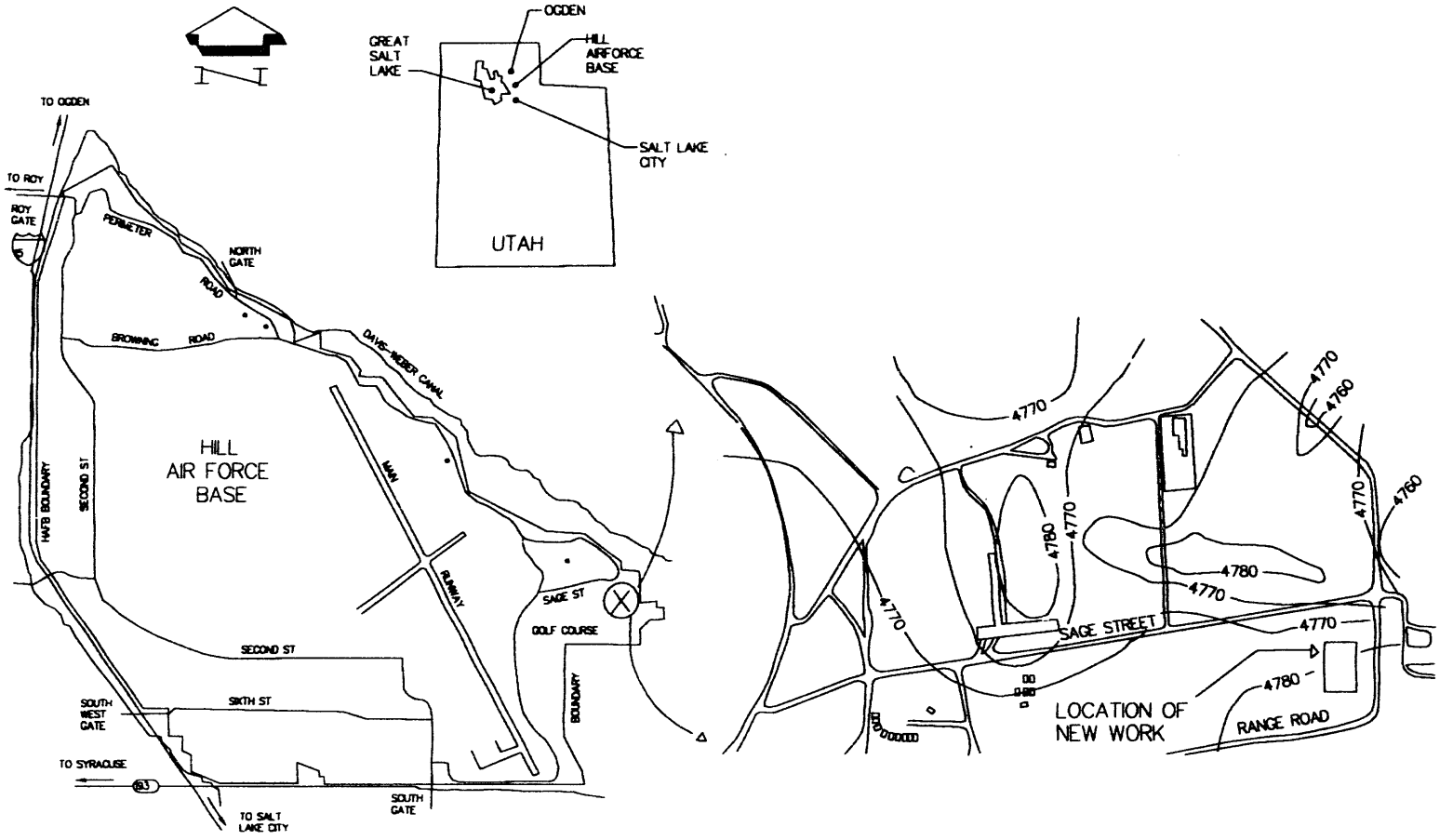

Figure 3.1. Map of Hill Air Force Base near Ogden, Utah

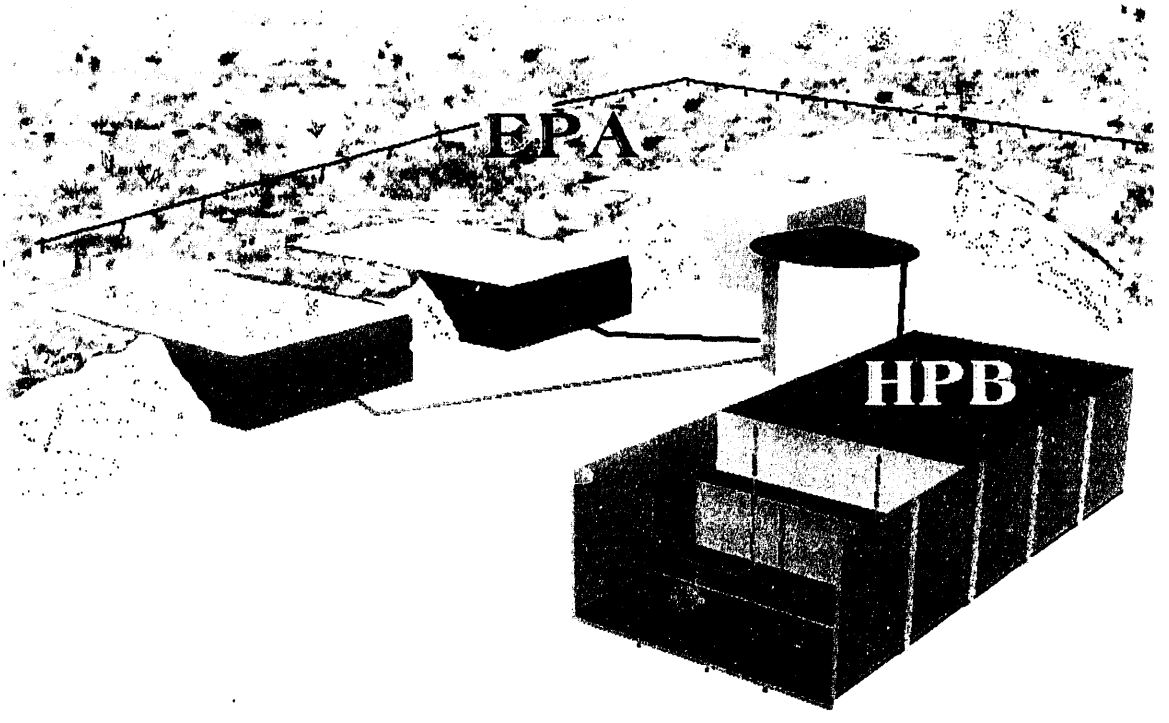

Figure 3.2. Perspective View of New Hanford Barrier Lysimeter (HPB) and Existing EPA-RCRA Lysimeters

Figure 3.3. View of Hill AFB, Utah, Lysimeters, Looking North

4.0 Lysimeter Design

The lysimeter will be constructed from L-shaped fiberglass sections bolted together in the field. This is essentially the same design used by LANL researchers at Hill AFB (Hakonson et al. 1993). There are two differences in the lysimeter design: 1) the new vendor-supplied fiberglass panels will create a 2.4-m-deep (8-ft-deep) lysimeter without the addition of extension panels, and 2) soil layers within the lysimeter will not have the 4% slope that was used in the LANL treatments. The bottom of the lysimeter will have two drainage collection areas created from 0.05-cm (0.02-in.) reinforced geomembrane sheets laying on the lysimeter floor. The edges of the geomembrane sheet will be raised on the ends and down the center of the long axis by draping the sheet material over 15-cm (5.91-in.) PVC pipe. The geomembrane sheet is installed for two reasons: 1) because the side walls may act as preferential drainage pathways, flow down the side walls will be collected separately from the area over the geomembrane sheet, and 2) if the water table outside the lysimeter should rise above the floor of the lysimeter, and if unlikely seam failures occur, water entering the lysimeter would be collected as sidewall drainage and would not affect the primary drainage estimate obtained from the lysimeter area above the geomembrane sheet.

The dimensions and estimated volume of materials required are shown in Figure 4.1. The basic components of the lysimeter appear in the Hanford Protective Barrier lysimeter located in an exploded view of the lysimeter components and backfill layers in Figure 4.2.

Layer thickness

$siltloam1 := 1 \cdot m$ $\quad sand := .15 \cdot m$ $\quad gravel_1 := .15 \cdot m$

$siltloam2 := 1 \cdot m$ $\quad gravel_2 := .15 \cdot m$

$$siltloam1 + siltloam2 + sand + gravel_1 + gravel_2 = 2.4 \cdot m$$

Siltloam density

$$density := 1.4 \cdot \frac{gm}{cm^3} \qquad density = 87.4 \cdot \frac{lb}{ft^3}$$

Lysimeter dimensions

$width := 15 \cdot ft$ $\quad length := 36 \cdot ft$ $\quad depth := 8 \cdot ft$

$width = 4.572 \cdot m$ $\quad length = 10.973 \cdot m$ $\quad depth = 2.438 \cdot m$

$$vol := width \cdot length \cdot (siltloam1 + siltloam2)$$

$vol = 3.543 \cdot 10^3 \cdot ft^3$ $\quad vol = 131.2 \cdot yd^3$ $\quad vol = 100.3 \cdot m^3$

$$vol_1 := width \cdot length \cdot (siltloam1)$$

$$gravel_vol := vol_1 \cdot 15 \cdot \%$$

$$gravel_vol = 9.843 \cdot yd^3$$

Volume of silt loam needed at Hill AFB

$$vol_silt := vol - gravel_vol$$

$vol_silt = 121.391 \cdot yd^3$ $\quad vol_silt \cdot density = 143.228 \cdot ton$

Figure 4.1. MathCad File of Dimensions and Volume Calculations for Lysimeter Layers

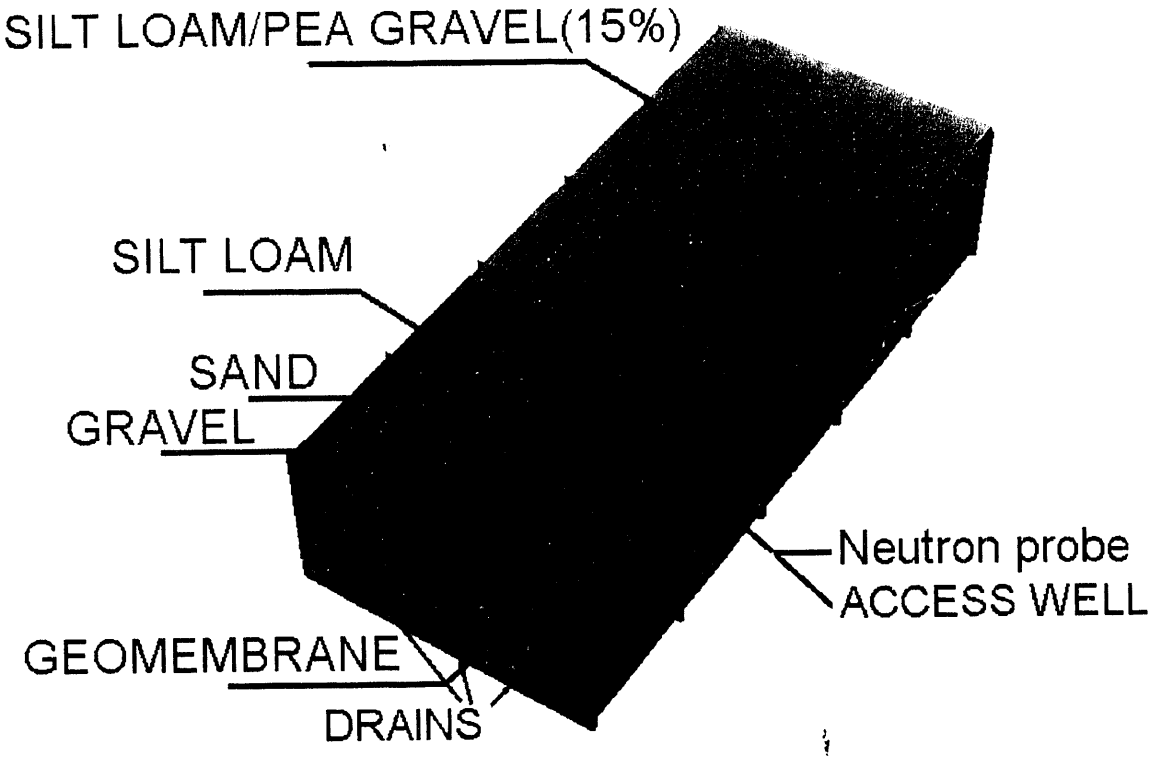

Figure 4.2. Lysimeter Layers (staggered cross-section)

5.0 Construction

The objective of this construction is to create a lysimeter or control volume that limits water entry and exit to the soil surface and drain ports on the bottom. Horizontal flow is eliminated by the waterproof lysimeter walls. Water flux at the soil surface occurs as precipitation additions and evapotranspiration losses. If the soil profile allows sufficient water to percolate downward, bringing the soil layer at the soil-sand interface to near saturation, water will move into the underlying coarse materials. This water will reach the sloping geomembrane, move to the drain ports, and be measured in the existing instrument caisson.

The lysimeter is constructed from readily obtainable modular fiberglass swimming pool pieces. Construction is broken down into several steps and each step is described in the following section.

5.1 Lysimeter Step-by-Step Construction

Note: In this section, units are English, which is more common in construction drawings, followed by metric in parenthesis. A subset of the construction drawings is included in Figures 5.1 and 5.2. These drawings are provided for general overview of construction; they are not to scale and some details such as line thickness and type have been lost in the reduction.

I. Do Site Survey

A. Establish reference elevation point. Reference elevation may be taken from top (west end) of existing lysimeters at 4809.75 ft (1466 m).

B. Stake excavation perimeter.

C. Flag location of existing drainage lines from eastern-most existing lysimeter as shown on drawing. Buried pipes are non-metallic. Any excavation near this area should be done by hand until pipes are located.

II. Secure Backfill

A. Silt loam soil

1. Excavate 200 tons (181,400 kg) of soil at Hanford (not part of contract)
2. Transport to Hill AFB (may be part of contract)
   a. If by truck, stockpile next to excavation.
   b. If by rail, store in rail car until needed (required capability).
      (1) Propose method to empty car.
      (2) Move soil to excavation site.
      (3) Lay 10-mil (0.254-mm) plastic sheet to dump soil on.

B. Mix 65 yd^3 (49.7 m^3) of silt loam with 7 yd^3 (5.3 m^3) pea gravel to achieve 15% by weight of pea gravel to be used as final 3.28-ft (1-m) layer.

1. Method one: transport 65 yd^3 (49.7 m^3) of soil to pug mill and mix with 7 yd^3 (5.3 m^3) pea gravel, then transport mix to site and store on 10-mil plastic sheet.
2. Method two: make temporary mixing pad from several 4 x 8 ft (1.22 x 2.44 m) sheets of plywood, mix soil on the temporary pad during construction by alternating layers of soil and pea gravel, then rototill, and stockpile as above.

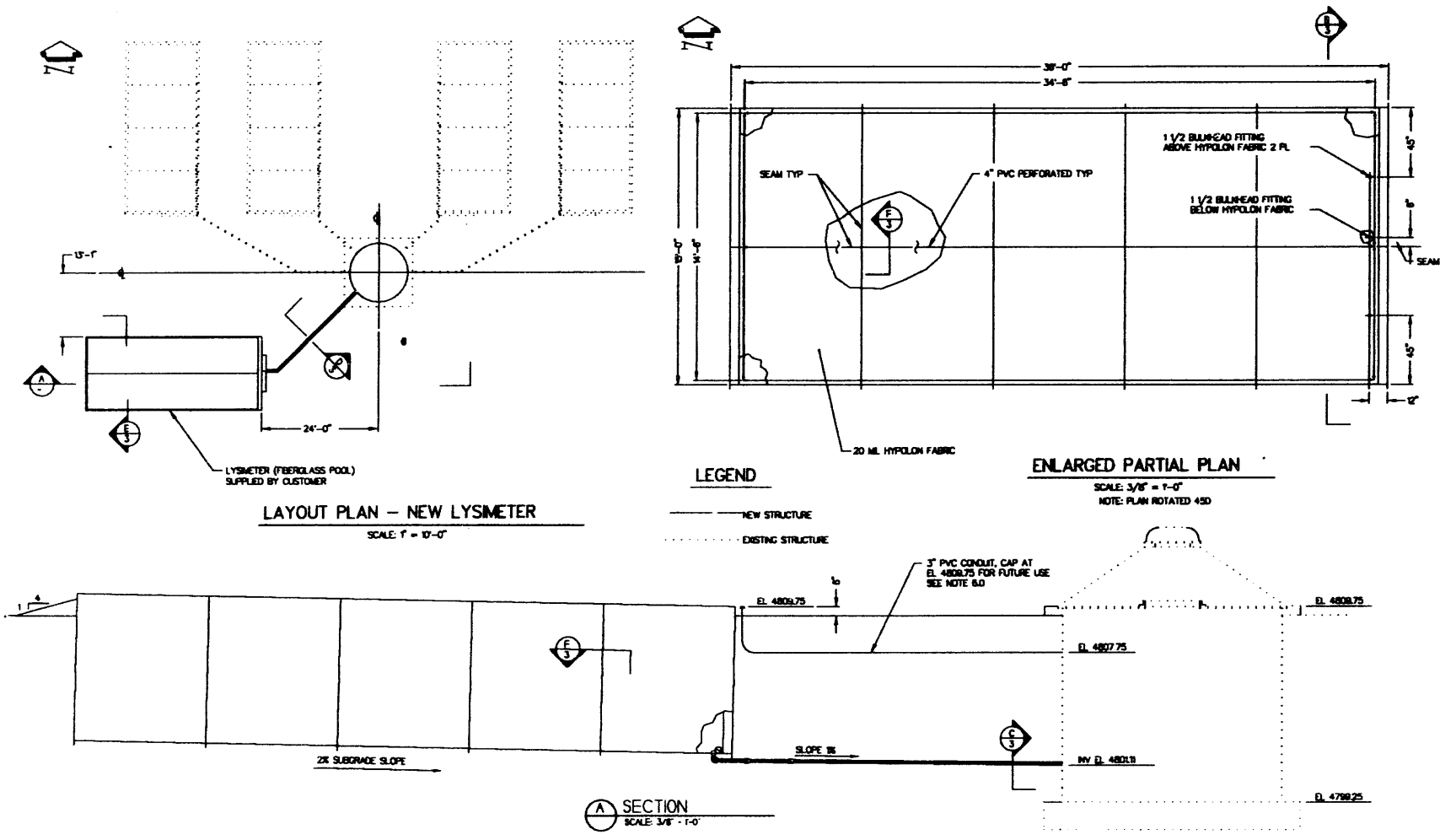

Figure 5.1. Plan View of Lysimeter Construction Drawings

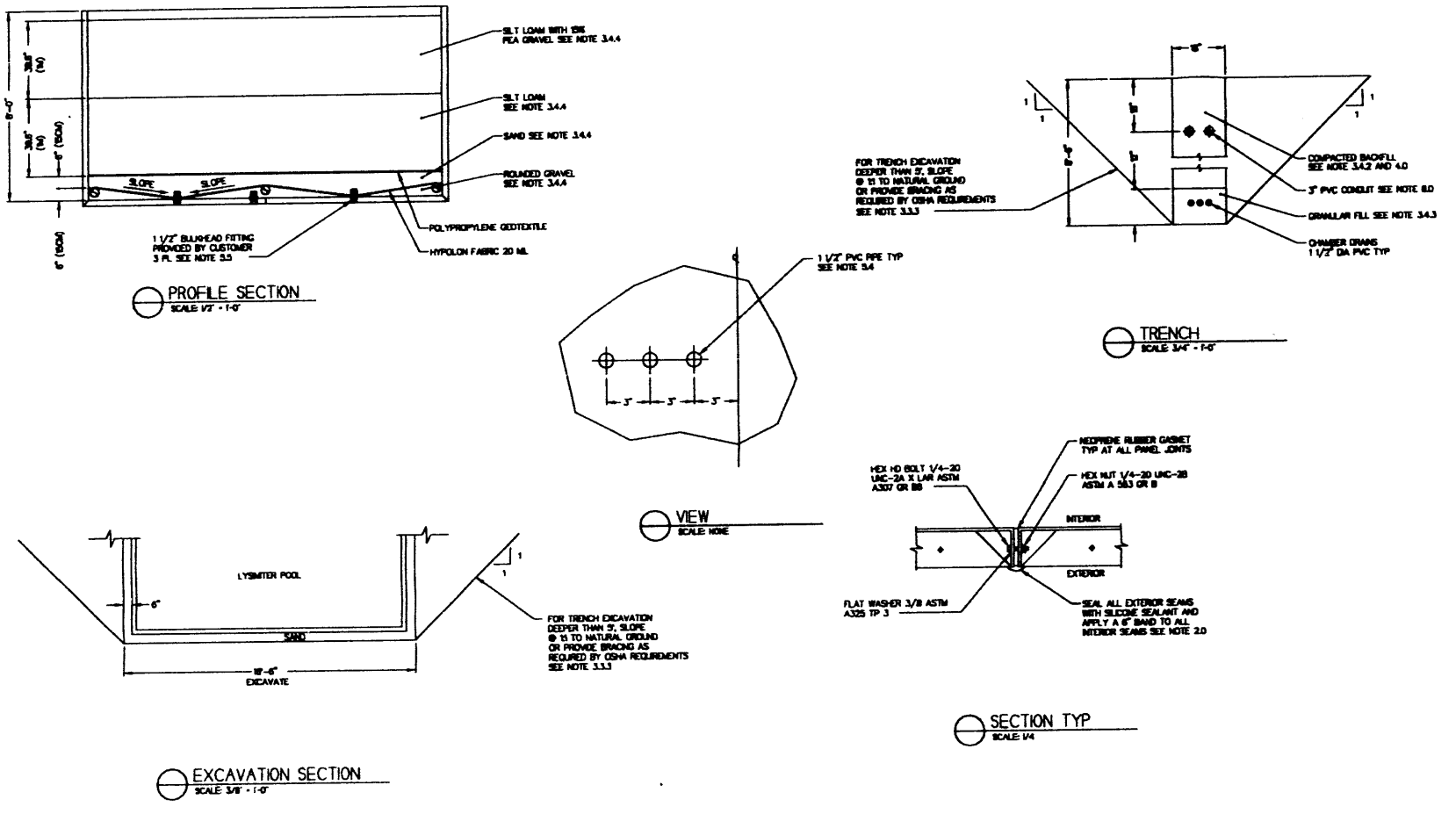

Figure 5.2. Elevation View of Lysimeter Construction Drawings

C. Local sandy soil
   1. Screen excavation material for use as backfill outside lysimeter.
   2. Purchase locally.
D. Add water to soil for optimum compaction.

III. Excavate Soil for Lysimeter Pit and Drainage Pipe Trench to Instrument Caisson

A. Maintain 1:1 slope on side walls on all trenches deeper than 5 ft (1.5 m).
B. Follow all applicable Hill AFB construction safety rules for pit excavations.
C. Stockpile screened backfill material.

IV. Cut Access Holes

A. Cut three 1.5-in. (3.8-cm) holes in steel caisson wall at approximately 8.5 ft (2.6 m) below grade and a minimum of 0.5 ft (15 cm) below lowest point of new lysimeter.

V. Prepare Excavation Floor

A. Prepare 6-in. (15-cm) sandy bed to set pool structure on. Leave space for drain pipes.

VI. Construct Lysimeter/Tank by Bolting Together L-shaped Sections

A. The contractor will provide a support mechanism capable of supporting the lysimeter L-shaped pieces a minimum of 5 ft (1.5 m) above the bottom of the excavation during the time the pieces are being bolted together. Total weight supported will be less than 2000 lb (907 kg).
B. Join each section on the flange edge to the adjacent section by 0.25-in. (0.63-cm) bolts spaced approximately 6 in. (15 cm) apart. Insert a compressible foam membrane strip (supplied) between each section as it is bolted together, forming a water-tight seal.
C. Apply silicone rubber coating to all exterior seams.
D. Repair any damage to the lysimeter, first with a fiberglass patch, then with a silicone rubber coating.
E. Attach three supplied drain fixtures; prepare ends for later addition of 1.5-in. (3.8-cm) PVC fittings.

VII. Lower the Lysimeter

A. Create depressions in sand layer for lysimeter seams.
B. (*Optional*) Leave steel cross-member support used in elevated scaffolding under lysimeter.

VIII. Seal Seams

A. Apply silicon rubber in 6-in. (15-cm) band to all seams.

IX. Connect Drains

A. Attach 90-degree elbows to drains.
B. Connect three 1.5-in. (3.8-cm) PVC pipes between drains and instrument caisson.

X. Check Slope

A. Contractor will confirm bottom slope of lysimeter.
B. Pacific Northwest Laboratory (PNL) researchers will confirm 4-degree slope of lysimeter with survey equipment or water level.

XI. Inspect Interior

A. Walk the interior of the pool to determine poorly backfilled areas and repack backfill under floor of lysimeter by tamping from the sides.

XII. Do Leak Test

A. Add 1 ft depth (4039 gal) of water to lysimeter, PNL staff will place pressure gauge capable of 1/1000-ft accuracy in drain end. Cover lysimeter with plastic sheet (10-mil minimum), leave tank for 2-day leak test.

B. Remove leak test water.

XIII. Inspect Interior

A. Do second walk of interior of the pool to determine poorly backfilled areas.

B. Re-pack backfill under floor of lysimeter if necessary.

XIV. Prepare Footing (*Optional*)

A. Prepare shallow forms for 1-ft (30-cm) non-reinforced concrete pour around base of lysimeter extending 2 feet out from pool and 1 foot up the outside of the pool. It is not necessary for cement to extend under lysimeter.

XV. Create Floor Level Drainage Impoundments Collection

A. Place three 35-ft (10.6-m) of 3 in. (15 cm) PVC drain field pipe (joined short pieces allowable) along the edges and down the center (long axis) connect with two 14.5-ft (4.42-m) pieces along the ends (short axis) using elbows or tees as needed. This pipe facilitates horizontal drainage down the long axis and elevates the edge of the geomembrane liner (to separate wall effect drainage from the central lysimeter area).

B. Place rounded gravel (1/4 to 3/4 in., not crushed) adjacent to 3-in. (15-cm) PVC pipe to provide sloping surface toward the lengthwise center-line of each sampling rectangle formed by the PVC pipe.

C. Drape 15- by 36-ft (4.57- by 10.97-m) 20-mil geomembrane over the PVC frame and gravel floor. This acts to divide the lysimeter lengthwise into two drainage collection areas, and separate sidewall drainage from the central areas of the lysimeter.

XVI. Connect Drains

A. Screw hollow drain bolt into 1.5-in. (3.8-cm) bulkhead fitting, clamping geomembrane liner to bulkhead fitting. Repeat on the other half of lysimeter [(bulkhead located 1/4 of the width from each side and 1 ft (30 cm) from the end of the lysimeter)]. These two drainage pipes extend to the instrument caisson and provide the primary measurement of drainage from the lysimeter.

B. Connect third 1.5-in. (3.8-cm) recessed bulkhead located near center of the lysimeter and 1 ft (30 cm) from the end to the PVC pipe running to the instrument lysimeter; this pipe collects all side wall drainage.

XVII. Leak Test all Hose/Pipe Connections

A. Pressure check drain hoses with air pressure.

B. Check drainage surface of geomembrane by spraying water and looking for ponded water.

C. Adjust gravel under geomembrane to eliminate ponding.

XVIII. Place Coarse Layers

A. Place 6-in. (15-cm) rounded gravel backfill using bucket of track-hoe to lower material into lysimeter level gravel surface.
B. Place 6-in. (15-cm) clean sand layer on top of gravel.
C. Place a geotextile over the top of the sand layer; use a non-woven, needle-punched polypropylene geotextile (to be supplied).

XIX. Place First Meter of Soil

A. Place four 7.8-in. (20-cm) lifts of Warden silt loam soil into the lysimeter. The fifth lift will be 7.8 in. (20 cm) plus any needed to bring the total thickness to 39.4 in. (1 m) after compaction. Level and compact each lift to a bulk density of 1.3 to 1.5 g/cm^3 (little additional compaction after leveling is expected). The layer will be checked for density and soil water content by PNL research staff. The outside of the lysimeter will be backfilled to the current interior soil level after each soil lift addition and before interior compaction. The outside backfill will also be compacted after at least every other lift. Instrumentation may be placed into soil layers by PNL staff with all wiring taped to the side of the lysimeter to minimize impact upon construction activities.

XX. Place Second Meter of Soil

A. Place 6 in. (15 cm) lifts of Warden silt loam soil mixed with 15% by weight pea gravel. After spreading, leveling, and compacting each lift to a bulk density of 1.3 to 1.5 g/cm^3, the layer will be checked for density and soil water content by PNL research staff. Add additional 6-in. (15-cm) lifts, pausing for density and moisture checks after each lift addition. The outside of the lysimeter will be backfilled and compacted to the current interior soil level after each soil lift addition.
B. (MIX IN PLACE OPTION) Place 6-in. (15-cm) lifts of Warden silt loam soil and 2- to 3-cm pea gravel together. Then thoroughly mix by rototilling gravel into the soil layer, level and compact each lift to a bulk density of 1.3 to 1.5 g/cm^3. The layer will be checked for density and soil water content by PNL research staff. Add additional 6-in. (15-cm) siltloam and 2-cm pea gravel lifts, mix each layer, and complete density and moisture checks after each lift addition. The outside of the lysimeter will be backfilled and compacted to the current interior soil level after each soil lift addition.

XXI. Backfill and Cleanup

A. Backfill and grade area surrounding lysimeter.
B. Remove and dispose of construction waste materials.
C. END CONTRACT WORK.

XXII. Revegetate and Install Instruments

A. Pacific Northwest Laboratory researchers will transplant sagebrush and selected bunch grasses on the lysimeter. The lysimeter will be irrigated weekly until the total soil moisture profile is similar to the EPA-RCRA lysimeter. Neutron or capacitance probe access wells will be installed into the soil layers.

6.0 Measurement Program

The measurement program is intended to continue for 3 years. During this time, data will be collected from both automated and manually read instrumentation. Descriptive plant measurements will be taken at least quarterly and used as input for vegetation parameters in model simulations. Soil properties will be measured during construction and at yearly intervals. Similar to the vegetation data, these values are needed for initiation of soil parameters in the model validation effort which is a separate surface barrier technology task.

6.1 Instrumentation

Similar to the prototype barrier test at Hanford, the primary measurement will be the collection and quantification of drainage water passing through the barrier. All data collection will adhere to the principles outline in the PNL document *QA Plan for PNL Support for the Hanford Barriers Development Program* (PNL 1993). The dimensions of the lysimeter are 4.57 m (15 ft) by 10.97 m (36 ft). If 0.5 mm of water (barrier design criterion) moves through the barrier, 25.08 L (6.62 gal) of water would be collected. Expected resolution and precision of monitoring instrumentation are presented in Table 6.1.

Because little water is expected to pass through the barrier, changes in stored soil moisture will also be measured. Soil moisture measurements will be made at a minimum of six depths at six locations on the lysimeter using either a neutron or a capacitance moisture probe. Near-surface soil samples (0-1 and 0-5 cm depths) will be collected for gravimetric moisture determination each time the soil profile moisture is measured with either moisture probe. A graduate student from Utah State University (Logan, Utah) will assist in this investigation. Additional soil water content measurements may be made using time-domain reflectometry. In addition, transpiration may be measured using stem flow gauges on the transplanted sagebrush.

Precipitation will be measured using a standard tipping bucket gauge, collection rain gauges, and a weighing rain gauge, which provides a more temporally correct measurement of snowfall and snow cover sublimation. Wind speed and direction will be measured at the 2-m (6.56-ft) elevation. Net radiation, air temperature, and relative humidity will also be measured.

Table 6.1. Instrumentation Measurement Capabilities

Component	Measurement Method	Instrument Resolution	Expected Precision	Variability Estimates
Drainage	Weight outflow water	± 1.0 g top-loading scale	1.0 g	not applicable
Storage change	Neutron probe	0.005 cm^3/cm^3	absolute 0.01 cm^3/cm^3 times 200 cm = 2 cm	
			relative $\sigma_{\bar{x}} = \sigma / \int 60$ 0.0013*200 cm = 0.25 cm[a]	
	Capacitance	0.01 cm^3/cm^3		
Rain gage	non-heated tipping bucket	0.25 mm	0.25 mm	0.1 cm wind effects and up to 1 cm for snow
	weighing gage	0.1 mm	0.5 mm temperature sensitive	0.05 cm wind
Net radiation	differential black body	0.1 W/m^2	1 W/m^2	up to 40 W/m^2
Soil Heat Flux	thermopile	0.1 W/m^2	1 W/m^2	up to 30 W/m^2
Temperature	thermocouple	0.01°C	0.1°C	up to 2°C
snow depth	sonic distance gage	1 mm	10 mm	up to 150 mm with drifts
anemometer	cup anemometer with magnetic switch closure	0.8 km/hr threshold	0.8 km/hr	0.8 km/hr at twice the height of the canopy

Variability estimates are given for sparse canopies and are based on authors' experience. These values are usually greatly reduced by judicial sensor positioning or multiple sensors.

(a) Assume standard deviation of neutron probe readings is .01 cm^3/cm^3, six sampling wells with ten measurements in each well.

6.2 Data Base

All data collected from this site will be recorded in official project notebooks or on magnetic media. Field observation will be recorded in PNL laboratory notebooks or water-proof field notebooks if necessary. Data collected using Campbell Scientific Inc. data loggers will be directly communicated to PNL-Richland through phone lines. These data loggers will also have tape backup recorders in the field. Other data recording devices may be used intermittently; data from these devices will be transmitted to PNL via 3 1/2" IBM floppy disks.

Devices, such as the neutron moisture probe, which have several seconds of operator idle time during each measurement should have a manual field notebook entry and a memory dump to floppy disk, with copies or originals returned to PNL. Blank data sheets will be used for repetitive measurements to minimize errors. These data sheets will then be taped into PNL record books.

The field site will documented with both 8-mm HI-Band video and 35-mm still photography. Fixed reference picture points will be established and select images will be digitized and provided for vegetation measurement and general documentation of the site.

6.3 Quality Assurance

Pacific Northwest Laboratory has collaborated with Westinghouse Hanford Company in developing the present quality assurance plan (PNL 1983) for the project Surface Barrier Technology. The Hill AFB lysimeter addition is task 6.0 of this project and the quality assurance guidelines set forth in the quality assurance plan will be followed. Foremost for this project are the documentation of actual construction and instrument placement, the maintenance of instrument calibration records, and because of the remote site location, a redundant measurement program with multiple measurement methods.

7.0 References

DOE (U.S. Department of Energy). 1987. *Final Environmental Impact Statement, Disposal of Hanford Defense High Level, Transuranic and Tank Wastes at Hanford Site.* Vol. 1, DOE/EIS-0113, U.S. Department of Energy, Washington, D.C.

DOE (U.S. Department of Energy). 1993. *Report on Value Engineering Study of Permanent Isolation Surface Barriers and Warning Marker System Development Plan at the Hanford Site.* DOE-RL-12074--8, Rev. 0., U.S. Department of Energy, Washington, D.C.

Gee, G. W., D. G. Felmy, J. C. Ritter, M. D. Campbell, J. L.Downs, M. J.Fayer, R. R. Kirkham, and S. O. Link. 1993a. *Field Lysimeter Test Facility Status Report IV, FY1993.* PNL-8911, Pacific Northwest Laboratory, Richland, Washington.

Gee, G. W., L. L. Cadwell, H. D. Freeman, M. W. Ligotke, S. O. Link, R. A. Romine, W. H. Walters, Jr. 1993b. *Testing and Monitoring Plan for the Permanent Isolation Surface Barrier Prototype.* PNL-8391, Pacific Northwest Laboratory, Richland, Washington.

Hakonson, T. E., K. L. Manies, R. W. Warren, K. V. Bostick, G. Trujillo, J. S. Kent, and L. J. Lane. 1993. "Migration Barrier Covers for Radioactive and Mixed Waste Landfills." In: *The Proceedings of the Second Environmental Restoration Technology Transfer Symposium*, San Antonio, Texas.

PNL (Pacific Northwest Laboratory). 1993. *PNL-MA-70 Quality Assurance Plan.* No. OHE-002, Rev 4, Pacific Northwest Laboratory, Richland, Washington.

Wing, N. R. 1994. *Permanent Isolation Surface Barrier Development Plan.* WHC-EP-0673, Westinghouse Hanford Company, Richland, Washington.

Distribution

No. of
Copies

OFFSITE

12 DOE/Office of Scientific and Technical Information

C. S. Abrams
Argonne National Laboratory
P.O. Box 2528
Idaho Falls, ID 83401

3 Battelle Memorial Institute
Project Management Division
505 King Avenue
Columbus, OH 43201
ATTN: W. A. Carbeiner
W. S. Madia
Technical Library

M. Benge
Bechtel-FUSRAP
P.O. Box 350
Oak Ridge, TN 37830

R. D. Bennett
U.S. Army Engineer Waterways Experiment Station
3909 Halls Ferry Road
Vicksburg, MS 39180-6199

B. Bede
US Ecology
509 E. 12th
Olympia, WA 98501

No. of
Copies

OFFSITE

4 Chem Nuclear Geotech
P.O. Box 14000
Grand Junction, CO 81502
ATTN: J. Duray
J. Elmer
V. Ponc
W. J. Waugh

A. T. Clark
U.S. Nuclear Regulatory Commission
Division of Fuel Material Safety
Washington, D.C. 20555

D. E. Daniel
University of Texas
Dept. of Civil Eng.
Austin, TX 78712

2 Desert Research Institute
P.O. Box 60220
Reno, NV 89506
ATTN: J. T. Ball
S. W. Tyler

M. Dunkelman
Department of Health
Division of Radiation Protection
Airdustrial Park
Bldg. 5, M.S. LE-13
Olympia, WA 98504

EBASCO
1201 Jadwin
Richland, WA 99352
ATTN: R. L. Treat

No. of
Copies

OFFSITE

2 Environmental Protection Agency
Hanford Project Office
712 Swift, MS B5-01
Richland, WA 99352
ATTN: D. A. Faulk
P. S. Innis

S. Evans
U.S. Department of Energy
1580 Sawtelle Drive
Idaho Falls, ID 83403

3 Hill Air Force Base
Environmental Management
Directorate
OO-ALC/EM*
7276 Wardleigh Road
Hill AFB, UT 84056-5127
ATTN: M. Blood
B. Elliot
D. Stone

R. G. Hills
Department of Mechanical Eng.
New Mexico State University
Box 30001
La Cruces, NM 88003

2 Idaho National Engineering
Laboratory
P.O. Box 1625
Idaho Falls, ID 83415
ATTN: J. B. Sisson
Technical Library

Jacobs Engineering Group, Inc.
2155 Louisiana Blvd. NE #10000
Albuquerque, NM 87110-5414
ATTN: T. Goering

No. of
Copies

OFFSITE

T. L. Jones
New Mexico State University
Agricultural Experiment Station
Box 3BF
Las Cruces, NM 88003

M. R. Jugan
U.S. Department of Energy
Oak Ridge Operations Office
P.O. Box E
Oak Ridge, TN 37830

W. A. Jury
University of California
at Riverside
Dept. of Soils
Riverside, CA 92502

5 Los Alamos National Laboratory
P.O. Box 1663
Los Alamos, NM 87545
ATTN: F. Barnes
K. V. Bostick
T. E. Hakonson
J. W. Nyhan
E. Springer

E. Maestas
U.S. Department of Energy
West Valley Project Office
P.O. Box 191
West Valley, NY 14171

C. Massimino
U.S. Environmental Protection
Agency
1200 Sixth Avenue
Seattle, WA 98101

No. of
Copies

OFFSITE

S. Needler
EG&G, Rock Flats
P.O. Box 464, Building 080
Golden, CO 80402

2 Oak Ridge National Laboratory
P.O. Box Y
Oak Ridge, TN 37830
ATTN: W. D. Burch
R. J. Luxmoore

G. Page
USDA-ARS
2000 East Allen Rd.
Tucson, AZ 85719

J. Rensel, MS PV-11
Washington State Department of Ecology
High-Level Waste Management
Olympia, WA 98504

2 Sandia National Laboratories
P.O. Box 5800
Albuquerque, NM 87185
ATTN: R. W. Lunch
Technical Library

J. B. Stong
Gonzaga University
Civil Engineering Dept
E. 502 Boone
Spokane, WA 99258-0001

2 U.S. Department of Energy-Albuquerque Operations Office
P.O. Box 5400, MS ERPO
Albuquerque, NM 87185-5400
ATTN: K. Bitner
G. J. Rael

No. of
Copies

OFFSITE

3 U.S. Department of Energy
785 DOE Place
Idaho Falls, ID 83402
ATTN: O. D. Markham
R. C. Morris
T. E. Reynolds

2 U.S. Department of Energy
Savannah River Operations Office
P.O. Box A
Aiken, SC 29801
ATTN: W. J. Brumley
D. Bruegennjohann

2 U.S. Geological Survey
333 W. Nye Lane
Carson City, NV 89706
ATTN: B. J. Andraski
D. E. Prudic

3 U.S. Geological Survey
Low-Level Radioactive Waste Program
Water Resources Division
12201 Sunrise Valley Drive
Reston, VA 22092
ATTN: P. Stevens
N. Trask
I. Winograd

2 U.S. Geological Survey
1201 Pacific Ave., Suite 600
Tacoma, WA 98402
ATTN: W. R. Bidlake
B. W. Drost

No. of
Copies

OFFSITE

3 U.S. Nuclear Regulatory Commission
Division of Engineering Safety
Waste Management Branch
5650 Nicholson Lane
Rockville, MD 29852
ATTN: T. J. Nicholson
E. O'Donnell
M. Silberberg

2 Washington State Department of Ecology
7601 W. Clearwater, Suite 102
Kennewick, WA 99336
ATTN: D. Teal
N. Uziemblo

3 Washington State Department of Ecology
Mail Stop PV-11
Olympia, WA 98504-8711
ATTN: E. M. Carlin
C. Cline
R. B. Hibbard

Washington State University
Pullman, WA 99164
ATTN: G. S. Campbell

E. P. Weeks
U.S. Geological Survey
Federal Center Mail Stop 413
Denver, CO 80225

M. Weishan
NYSERDA
P.O. Box 191
West Valley, NY 14171

No. of
Copies

OFFSITE

Westinghouse Savannah River Company
P.O. Box 616
Aiken, SC 29802
ATTN: M. D. Boersma

P. J. Wierenga
University of Arizona
Dept. of Soil & Water
429 Shantz Building
Tucson, AZ 85721

ONSITE

11 DOE Richland Operations Office

G. J. Bracken	A4-02
J. J. Broderick	A7-27
R. D. Freeberg	A5-19
R. E. Gerton	A4-02
J. D. Goodenough	A5-19
A. C. Harris	A5-19
R. D. Izatt	A3-42
P. M. Pak	A5-19
R. K. Stewart	A5-19
D. E. Trader	A5-90
DOR-RL Reading Room 1	

2 U.S. Army Corps of Engineers

W. L. Greenwald	A5-20
J. H. Jacobson	A3-61

4 Kaiser Engineers Hanford Company

S. D. Consort	E6-31
D. L. Fort	E6-50
L. A. Gladdis	E6-50
R. I. Watkins	E6-41

No. of Copies

ONSITE

41 Westinghouse Hanford Company

M. R. Adams	H6-01
H. Babad	R2-78
R. J. Bliss	B3-04
M. A. Buckmaster	H6-03
J. W. Cammann	H4-14
R. A. Carlson	H6-03
C. C. Chamberlain	H6-28
A. P. Church	H6-01
H. D. Downey	H6-27
W. F. Heine	B3-63
C. E. Hodge	A5-56
R. W. Hookfin	H6-28
G. W. Jackson	H6-21
K. N. Jordan	H6-28
C. J. Kemp	H4-14
M. K. Korenko	B3-08
D. S. Landeen	H4-14
M. J. Lauterbach	H6-01
R. E. Lerch	B3-63
H. E. McGuire	B3-63
D. R. Myers	S0-14
D. J. Newland	B1-58
K. L. Petersen	H4-14
R. W. Powell	H4-14
R. C. Roos	H6-04
M. R. Sackschewsky	H4-14
W. A. Skelly	H6-03
J. C. Sonnichsen	H4-14
J. A. Voogd	R4-03
G. F. Williamson	R4-01
N. R. Wing	H4-14
T. M. Wintczak	H6-27
D. D. (Don) Wodrich	B1-59
R. D. Wojtasek	H6-27
D. E. Wood	H0-32
J. G. Woolard	H6-05
Publishing Services (3)	
Environmental Data Management Center (2)	

No. of Copies

ONSITE

38 Pacific Northwest Laboratory

L. L. Cadwell	P7-54
M. D. Campbell	K6-77
J. L. Downs	P7-54
M. J. Fayer	K6-77
D. Felmy	K6-77
M. G. Foley	K6-84
H. D. Freeman	P8-38
G. W. Gee	K6-77
M. J. Graham	K6-78
P. C. Hays	K6-86
C. T. Kincaid	K6-77
R. R. Kirkham (7)	K6-77
G. V. Last	K6-84
M. W. Ligotke	P7-54
S. O. Link	P7-54
E. Nyberg	P7-72
T. L. Page	K1-37
G. P. O'Connor	K6-62
J. C. Ritter	K6-77
M. L. Rockhold	K6-77
L. E. Rogers	P7-54
R. A. Romine	P8-38
M. A. Simmons	P7-54
M. E. Thiede	K6-13
J. M. Thomas	P7-54
W. H. Walters	K6-06
Publishing Coordination	
Technical Report Files (5)	

DATE
FILMED
9/1/94

END