AIIM

Association for Information and Image Management

1100 Wayne Avenue, Suite 1100
Silver Spring, Maryland 20910

301/587-8202

Centimeter

Inches

MANUFACTURED TO AIIM STANDARDS
BY APPLIED IMAGE, INC.

Conf-940986--2

LA-UR-94-981

Title: COMPARISON OF NEUTRON PROBE AND TIME DOMAIN REFLECTOMETRY TECHNIQUES OF SOIL MOISTURE ANALYSIS

Author(s): Tracy G. Schofield
Gary J. Langhorst
George Trujillo
Kenneth V. Bostick
Wayne R. Hansen

Submitted to: Time Domain Reflectometry in Environmental, Infrastructure and Mining Applications, Northwestern University, Evanston, IL; Sponsors: Northwestern University and LANL, US Bureau of Mines
September 7-9, 1994

MASTER
DISTRIBUTION OF THIS DOCUMENT IS UNLIMITED

Los Alamos
NATIONAL LABORATORY

Los Alamos National Laboratory, an affirmative action/equal opportunity employer, is operated by the University of California for the U.S. Department of Energy under contract W-7405-ENG-36. By acceptance of this article, the publisher recognizes that the U.S. Government retains a nonexclusive, royalty-free license to publish or reproduce the published form of this contribution, or to allow others to do so, for U.S. Government purposes. The Los Alamos National Laboratory requests that the publisher identify this article as work performed under the auspices of the U.S. Department of Energy.

Form No. 836 R5
ST 2629 10/91

COMPARISON OF NEUTRON PROBE AND TIME DOMAIN REFLECTOMETRY TECHNIQUES OF SOIL MOISTURE ANALYSIS

by

T.G. Schofield, G.J. Langhorst, G. Trujillo, K.V.Bostick, W.R. Hansen[1]

ABSTRACT

The Environmental Science Group of Los Alamos National Laboratory collected soil water content data using Time Domain Reflectometry (TDR) and neutron probe in order to correlate the results from the two techniques in a study performed at Los Alamos, NM. Two well-characterized field plots (3m x 10m) were instrumented with TDR waveguides and neutron probe access tubes at four locations. At each location, TDR rod pairs were placed horizontally at 5-,15-,30-,45- and 60-cm depths and vertical sets of rod pairs with lengths of 15-,30-,45- and 60-cm were installed.

Neutron probe measurements were taken at 15-,30-,45- and 60-cm depths. Because the neutron probe measures a spherical volume, soil water content values were compared

[1]Environmental Science Group, Los Alamos National Laboratory

with horizontal TDR readings averaged over the same zone. Additionally, vertical TDR readings were compared to neutron probe readings averaged over the depths corresponding to each TDR length. Measurements for each technique were taken weekly since fall of 1992. A time series comparison of the results is presented.

INTRODUCTION

Soil water content measurements have been collected using neutron probe technology by the Environmental Science Group (EES-15) of Los Alamos National Laboratory for the past fifteen years. With the arrival of Time Domain Reflectometry (TDR) and it's comparative ease of installation , use and adaptability to automated data collection, many field endeavors that formerly employed neutron probe measurements are now being monitored with TDR. A comparison of the two techniques is desirable to determine if the data collected by the TDR technique is a valid replacement for the more labor intensive but reliable and accepted neutron probe method.

The results of a ten-month study to compare TDR and neutron probe measurements of soil water content are presented. Results indicate good comparability overall. However, there are two notable instances where results diverge in this study.

Materials and Methods

TDR

Two field plots (3 x 10m) that have been monitored for soil water content by neutron probe for more than five years were employed for this study *(1)*. The plots were constructed of crushed Bandelier tuff and are uniform through the soil column to a depth well below that which was investigated in this study. Each plot has three access tubes evenly spaced on the longitudinal axis of the plot (figure 1). Near two of the tubes on each plot a series of TDR waveguides and temperature probes were placed at various depths with either a vertical or horizontal orientation to approximate the neutron probe interrogation zones.

A 70 cm deep trench was excavated near each of the four access tubes. In the vertical face of each trench, TDR rod pairs were placed horizontally at 5-,15-,30-,45-,and 60-cm depths. On the surface of each plot near each trench TDR rod pairs of 15-, 30-, 45-and 60-cm length were placed vertically (figure 2). The TDR rod pairs were connected to a Campbell Scientific (Logan, Utah) multiplexer (model SDMX-50) by coaxial cable. Multiplexers were linked to a master multiplexer of the same type that was connected to a Tektronix 1502B Cable Tester (Tektronix, Beaverton, Oregon). The cable tester and multiplexers were controlled and data were collected by a Campbell Scientific 21XL datalogger. All electronic components were mounted in weatherproof housings and the entire system powered by a Campbell Scientific 18 watt solar panel .

Temperature probes (Campbell Scientific model 107B) were placed in the access trenches at 15-,30-,45- and 60-cm depths and connected to the same datalogger that was used to collect the TDR data. The access trenches were backfilled with the original material and the surface of the plots restored to their initial condition as much as practicable.

Data were acquired using the standard instruction for the 21XL datalogger with individual cable lengths specified and raw waveforms collected. The waveforms were uploaded to a personal computer and volume percent water content was calculated with a QuickBasic (Microsoft) program using the Topp calibration *(2)*.

Quattro-Pro for Windows (Borland) was used to generate all time series graphs, XY plots and regression analyses.

Neutron Probe

A Campbell Pacific Nuclear Corp. (Martinez,Ca.) model 503DR hydroprobe was used to collect neutron probe data. The probe uses an encapsulated Am^{241}/Be source and the calibration employed for converting gross counts to volume percent water content was derived from the previous monitoring of these test plots . Measurements were made at 15-, 30-, 45-, and 60-cm depths in the four access tubes near the TDR instrumentation as well as in two tubes that were left undisturbed for control purposes. Measurements were performed within one hour of the TDR measurements on the same weekly schedule.

Experimental Approach

For purposes of comparison, it was assumed that the neutron probe measures a spherical volume of approximately 30 cm diameter *(3)* while TDR interrogates a virtually one-dimensional axis along the length of the waveguides. Also, it was assumed that the soil water content mostly changes in the vertical axis of the soil column and that lateral moisture distribution is relatively constant over the small instrumented locations. The footprint of the instrument array around each access tube was < 1 m^2. These assumptions allow comparisons to be made between the two measurement techniques that sample very different volumes.

Two sets of comparisons were made, each at three depths in the soil column for a total of six comparisons at each of the four instrumented tube locations . Results for a particular comparison from all four locations were analyzed as a composite.

The six comparisons are:

Comparison 1 (figure 3a)- Neutron probe at 15 cm depth compared to the average of horizontal TDR values at 5-,15- and 30-cm depths.

Comparison 2 (figure 4a)- Neutron probe at 30 cm depth compared to the average of horizontal TDR values at 15-,30- and 45-cm depths.

Comparison 3 (figure 5a)- Neutron probe at 45 cm depth compared to the average of horizontal TDR values at 30-,45- and 60-cm depths.

Comparison 4 (figure 6a)- Vertical TDR of 30 cm length compared to neutron probe value at 15 cm (single depth).

Comparison 5 (figure 7a)-Vertical TDR of 45 cm length compared to the average of neutron probe values at 15- and 30-cm depths.

Comparison 6 (figure 8a)- Vertical TDR of 60 cm length compared to the average of neutron probe values at 15-,30- and 45-cm depths.

RESULTS AND DISCUSSION

Time series plots of the six comparisons at each tube location were performed as well as composite plots where data from all four tube locations were averaged for each of the six comparisons. Results from the composite plots were virtually identical to the individual location plots and only the composites will be presented (figures 3b thru 8b).

Regression analysis was performed on all comparisons and XY plots with regression lines are presented in figures 3c thru 8c.

The two techniques track each other very well with two notable exceptions:

1. Soil temperatures below freezing

Soil freezing near the surface had a suppressing effect on vertically placed TDRs as shown in figures 6b and 8b for Days 337-20. This suppression is reflected in the regression analyses which produced R^2 values between 0.815 and 0.852. Oddly, the suppression was not as evident in the 45 cm length TDR (figure 7b) but the R^2 value produced by regression analysis was 0.824 which is in the same range as the results from the analyses of the other vertical TDR measurements. Horizontally placed TDR averages were affected by the freezing but to a smaller degree most probably due to freezing

conditions affecting only the TDRs closest to the surface as evidenced by comparing figure 3b which includes values from the 5 cm depth TDR to figures 4b and 5b which show results from TDRs at deeper levels. The regression analyses for these comparisons also reflect a much reduced effect from freezing with R^2 values ranging from 0.917 to 0.960. Interestingly, the fit from these regression analyses are comparable to the fit of regression analyses performed by comparing vertically placed TDR values to horizontally placed TDR average values (figure 12) where $R^2 = 0.916$.

2. Volumetric soil water content above 20 percent

As soil water content values approach 20 percent the neutron probe readings appear to attenuate while the TDR readings continue to rise well above this value. Whether this is due to the calibration used to calculate volumetric water content in the neutron probe or to some other factor has not yet been determined.

Validation of Method

In order to determine the validity of using the average of horizontal TDRs to measure the soil water content of a particular zone, a direct comparison was made of these average values to the values from vertically placed TDRs (figures 9-11).

The plots show a very good correlation with the exception of the period from Day 4 to Day 27 when the soil was partially frozen close to the surface which had a suppressing effect on the vertical TDRs but none on the horizontal TDRs as they were below the frozen zone. The regression analysis shows a very good fit for the comparison (figure 12).

SUMMARY

TDR does appear to be a reasonable substitute for neutron probe measurements for the soil type and water content range investigated in this study with the exception of measurements made in conditions of frozen soil where accuracy will be reduced. The divergence of the two techniques at the 20 percent range is worrisome and requires furthur investigation as will the effects of soil type and higher water content regimes on the applicability of replacing neutron probe measurements with TDR.

ACKNOWLEDGEMENTS

The authors would like to express their gratitude to Thomas Hakonson, Everett Springer, John Nyhan and Leo Martinez for their invaluable assistance and support in the course of this study.

REFERENCES

1. Ritchey, M.A., K.L. Manies, J.L. Martinez, G. Trujillo, T.E. Hakonson, K.V. Bostick Influence of Vegetation and Surface Management Practices on the Hydrology of Landfill Covers. Los Alamos National Laboratory Report in Draft.

2. Topp, G.C., J.L.Davis, and A.P. Annan. Electromagnetic Determination of Soil Water content: Measurements in Coaxial Transmission Lines. Water Resources Research

16.3, 1980, pp. 574-582.

3.Gardner,W.H.. Water Content. Methods of Soil Analysis, v.9,part 1, 1986, pp.493-523.

LIST OF CAPTIONS

Figure 1.--Overhead view of plot layout.

Figure 2.--Cross section view of TDR installation.

Figure 3a.--Cross section view of comparison #1.

Figure 3b.--Time series plot of comparison #1.

Figure 3c.--XY plot and regression line of comparison #1.

Figure 4a.--Cross section view of comparison #2.

Figure 4b.--Time series plot of comparison #2.

Figure 4c.--XY plot and regression line of comparison #2.

Figure 5a.--Cross section view of comparison #3.

Figure 5b.--Time series plot of comparison #3.

Figure 5c.--XY plot and regression line of comparison #3.

Figure 6a.--Cross section view of comparison #4.

Figure 6b.--Time series plot of comparison #4.

Figure 6c.--XY plot and regression line of comparison #4.

Figure 7a.--Cross section view of comparison #5.

Figure 7b.--Time series plot of comparison #5.

Figure 7c.--XY plot and regression line of comparison #5.

Figure 8a.--Cross section view of comparison #6.

Figure 8b.--Time series plot of comparison #6.

Figure 8c.--XY plot and regression line of comparison #6.

Figure 9.--Time series plot of vertical TDR (30 cm length) and average of horizontal TDRs at 5-,15- and 30-cm depths.

Figure 10.--Time series plot of vertical TDR (45 cm length) and average of horizontal TDRs at 5-,15-,30- and 45-cm depths.

Figure 11.--Time series plot of vertical TDR (60 cm length) and average of horizontal TDRs at 5-,15-,30-,45- and 60-cm depths.

Figure 12.--XY plot and regression line of vertical TDRs and average of horizontal TDRs .

DISCLAIMER

This report was prepared as an account of work sponsored by an agency of the United States Government. Neither the United States Government nor any agency thereof, nor any of their employees, makes any warranty, express or implied, or assumes any legal liability or responsibility for the accuracy, completeness, or usefulness of any information, apparatus, product, or process disclosed, or represents that its use would not infringe privately owned rights. Reference herein to any specific commercial product, process, or service by trade name, trademark, manufacturer, or otherwise does not necessarily constitute or imply its endorsement, recommendation, or favoring by the United States Government or any agency thereof. The views and opinions of authors expressed herein do not necessarily state or reflect those of the United States Government or any agency thereof.

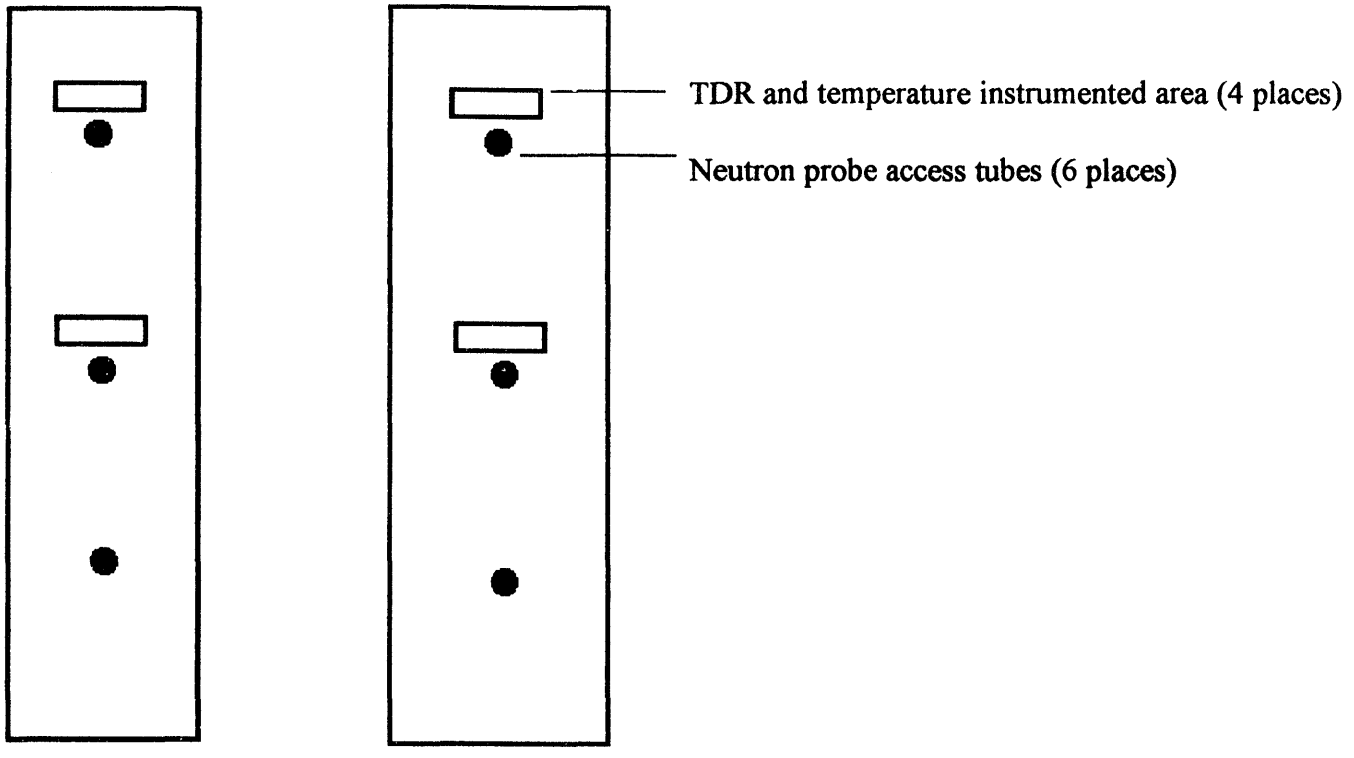

Figure 1.

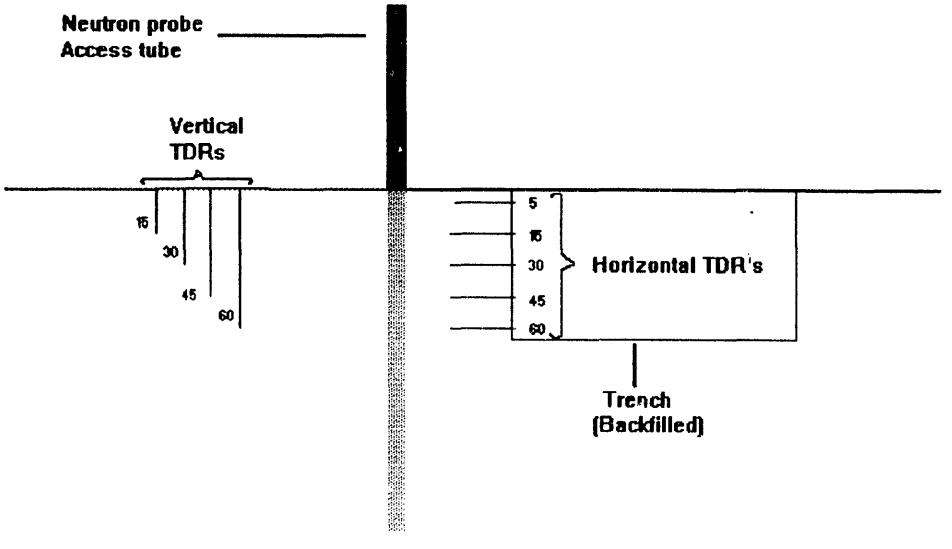

Figure 2.

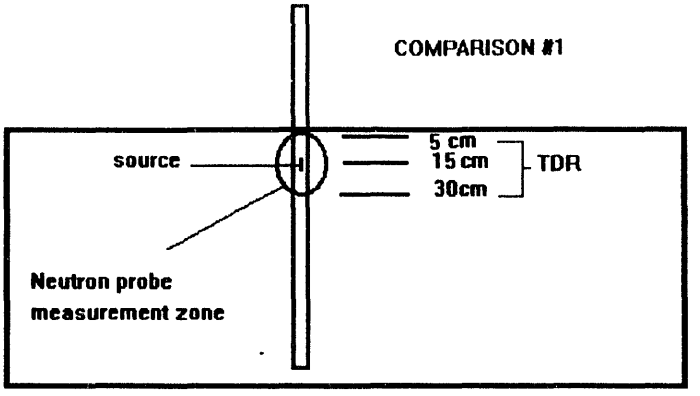

Figure 3a.

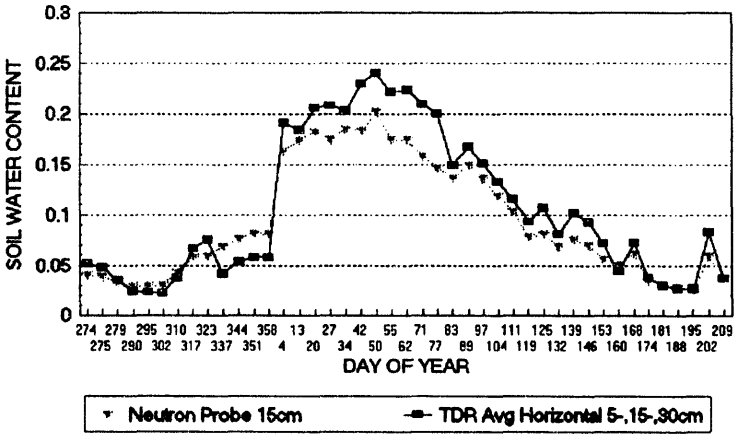

Figure 3b.

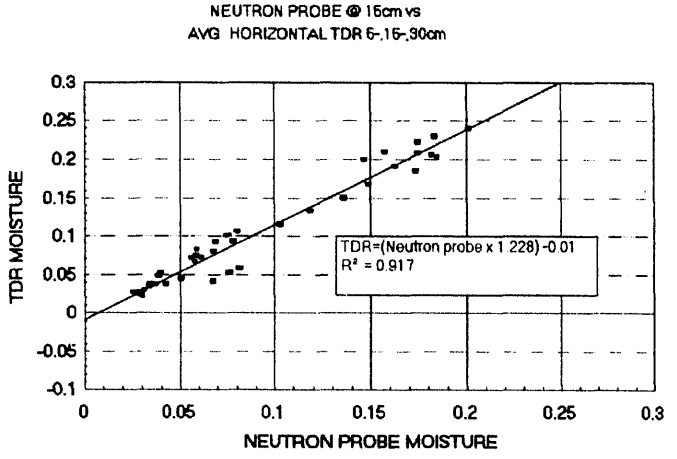

Figure 3c.

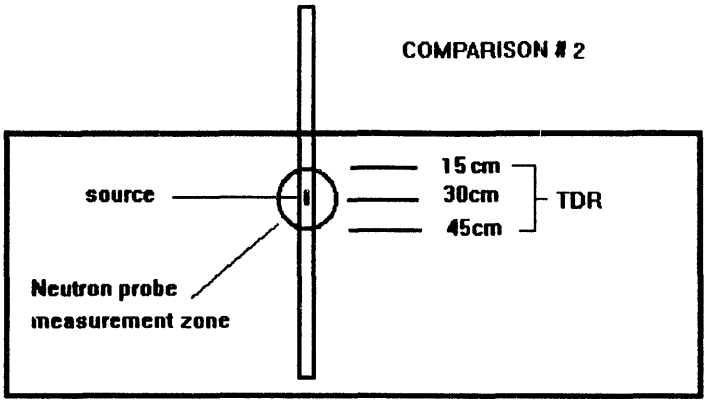

Figure 4a.

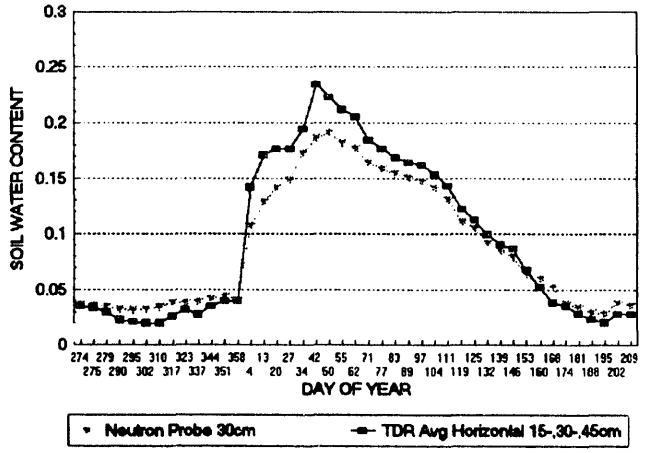

Figure 4b

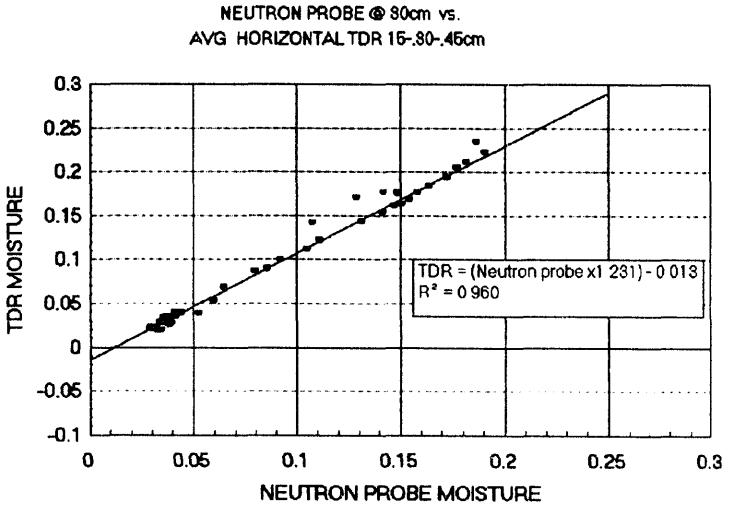

Figure 4c.

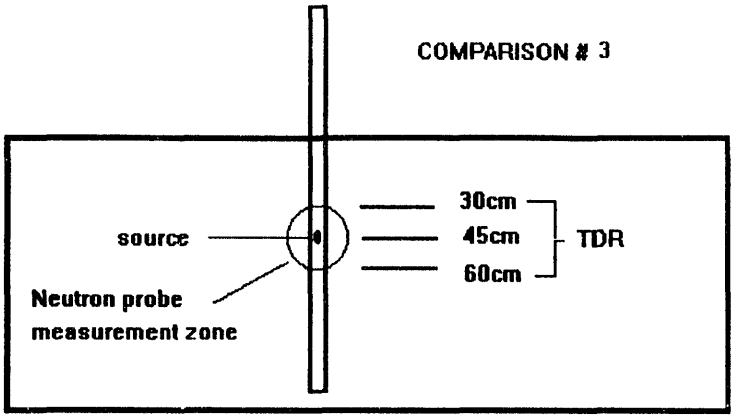

Figure 5a.

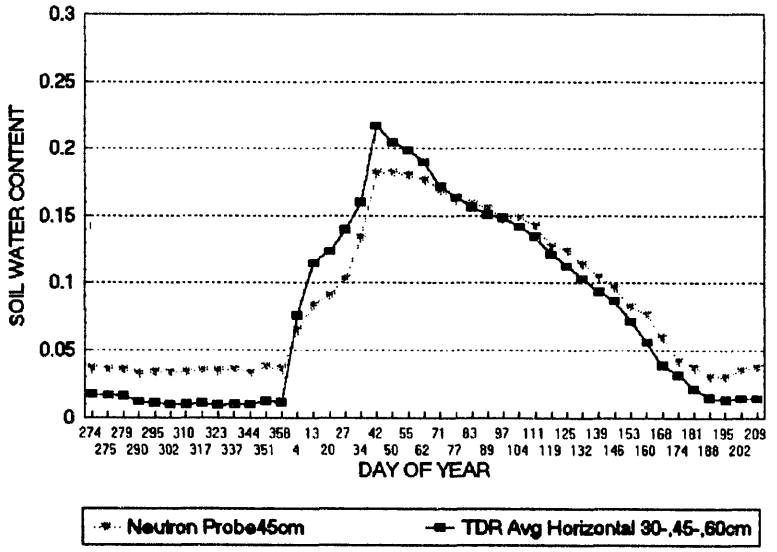

Figure 5b.

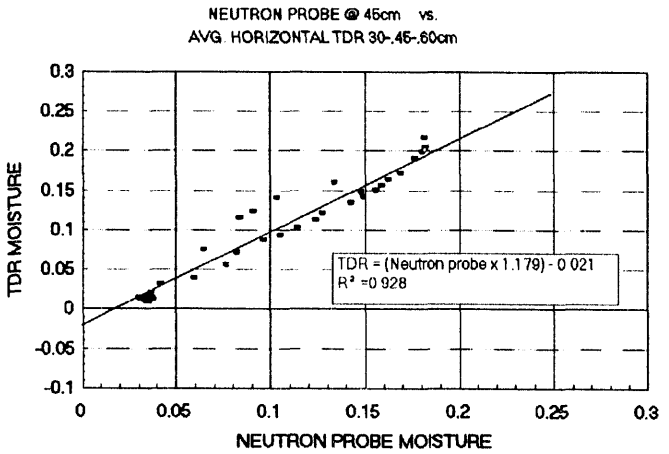

Figure 5c.

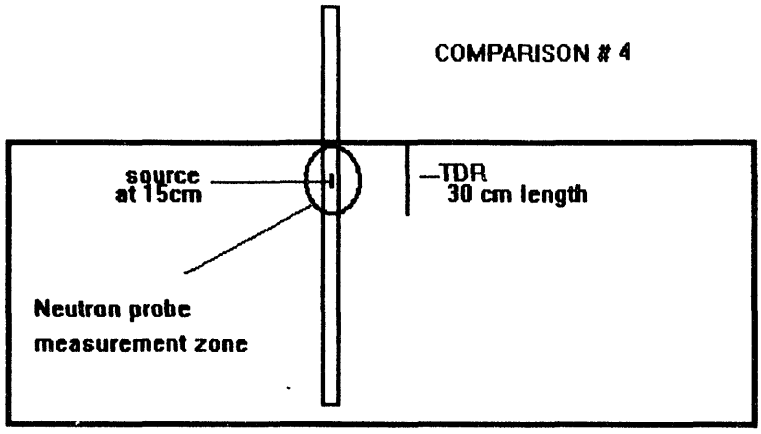

Figure 6a.

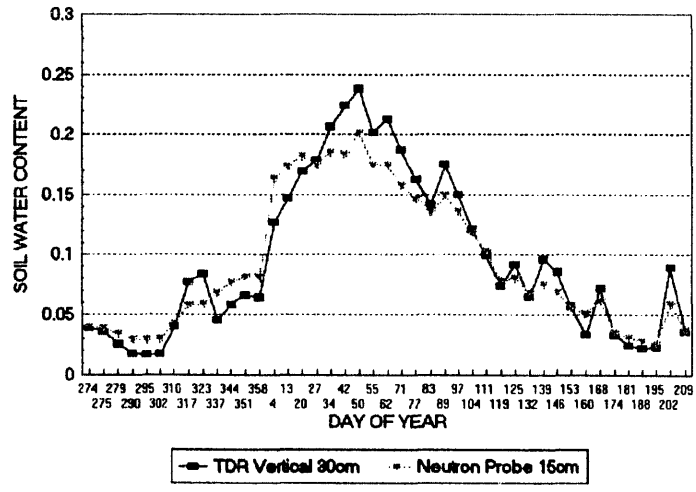

Figure 6b.

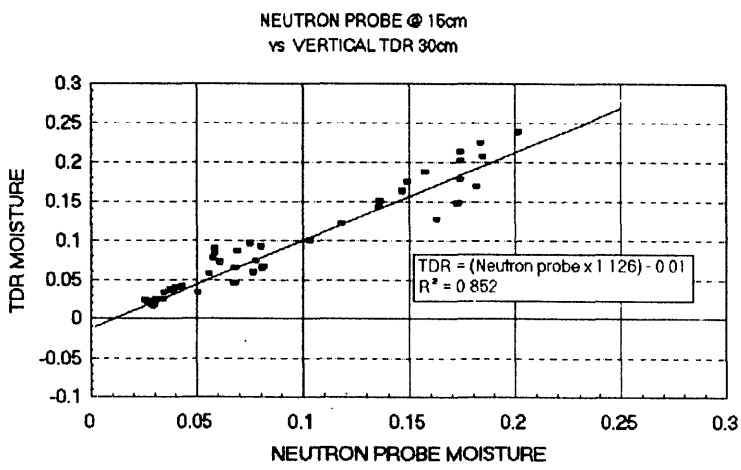

Figure 6c.

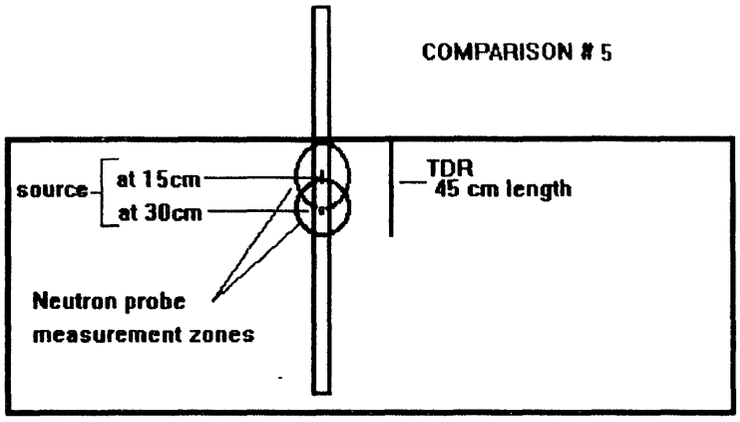

Figure 7a.

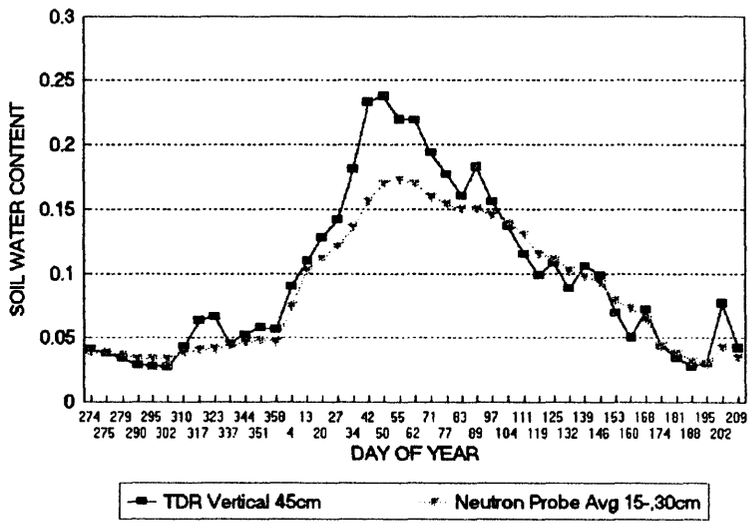

Figure 7b.

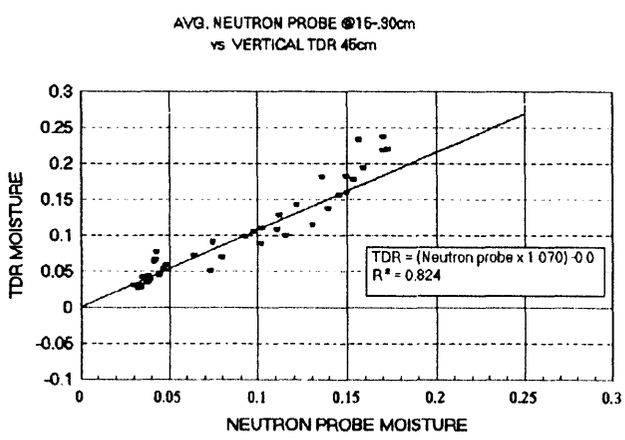

Figure 7c.

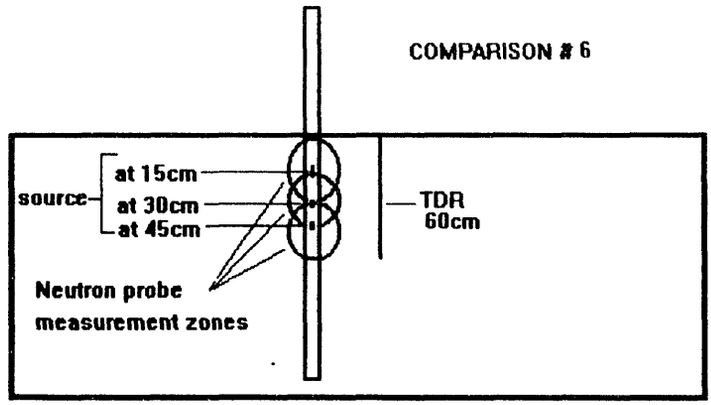

Figure 8a.

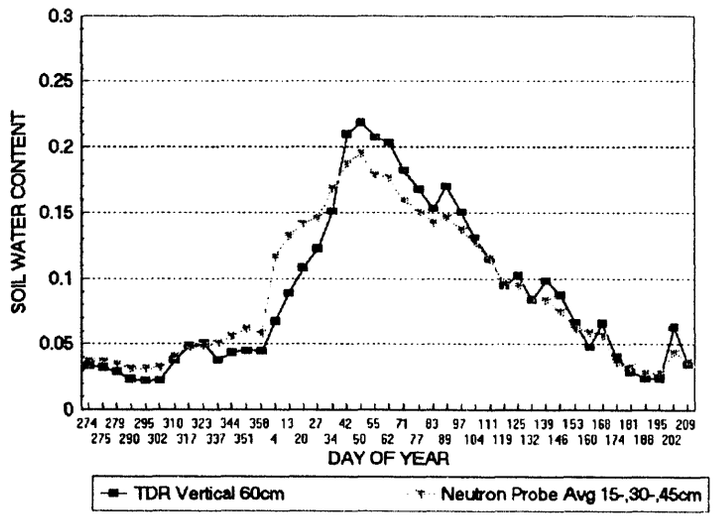

Figure 8b.

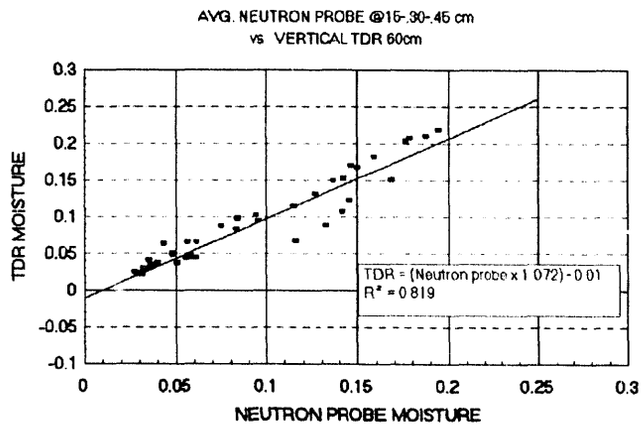

Figure 8c.

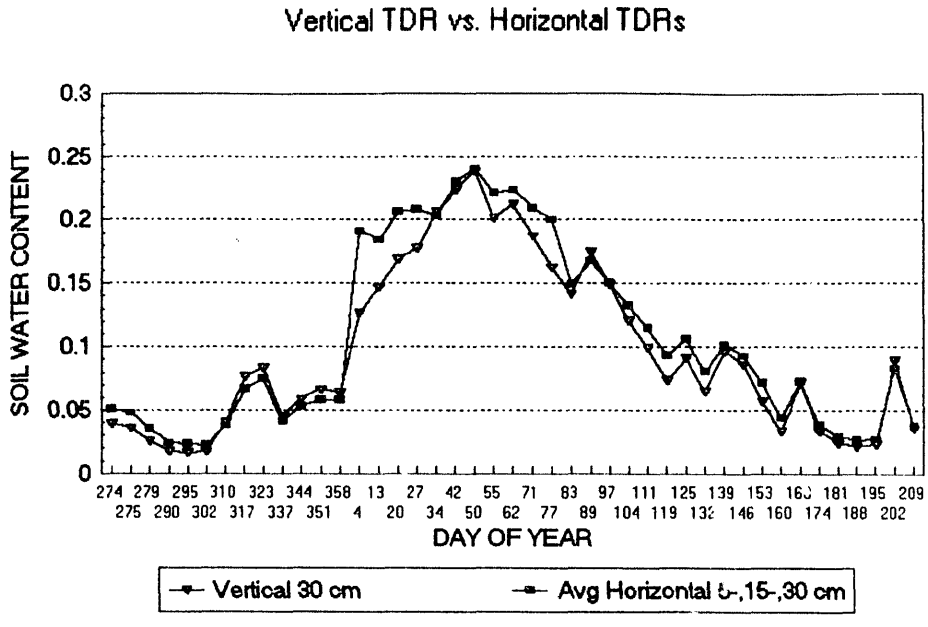

Figure 9.

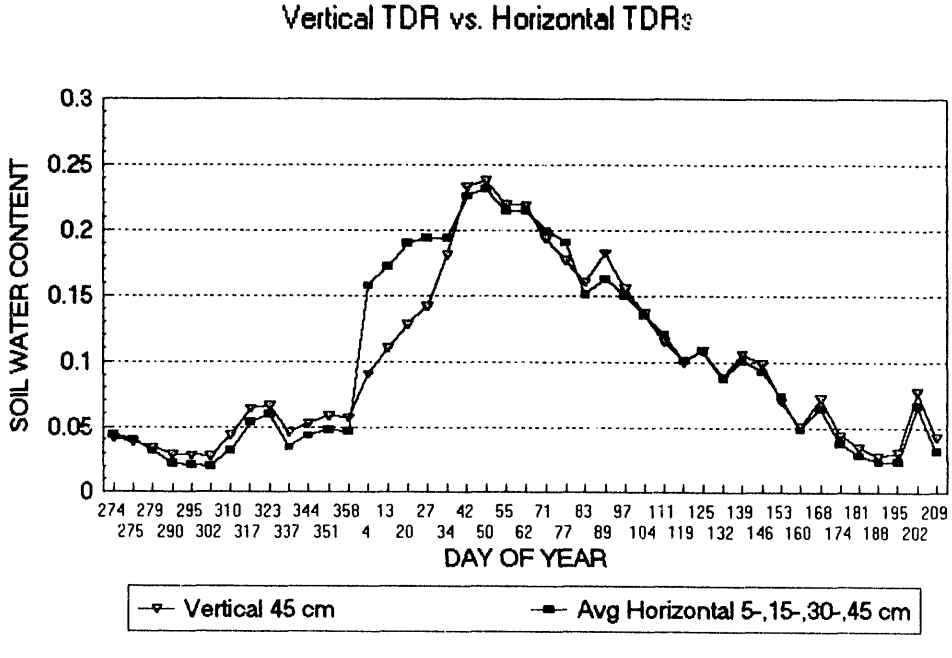

Figure 10.

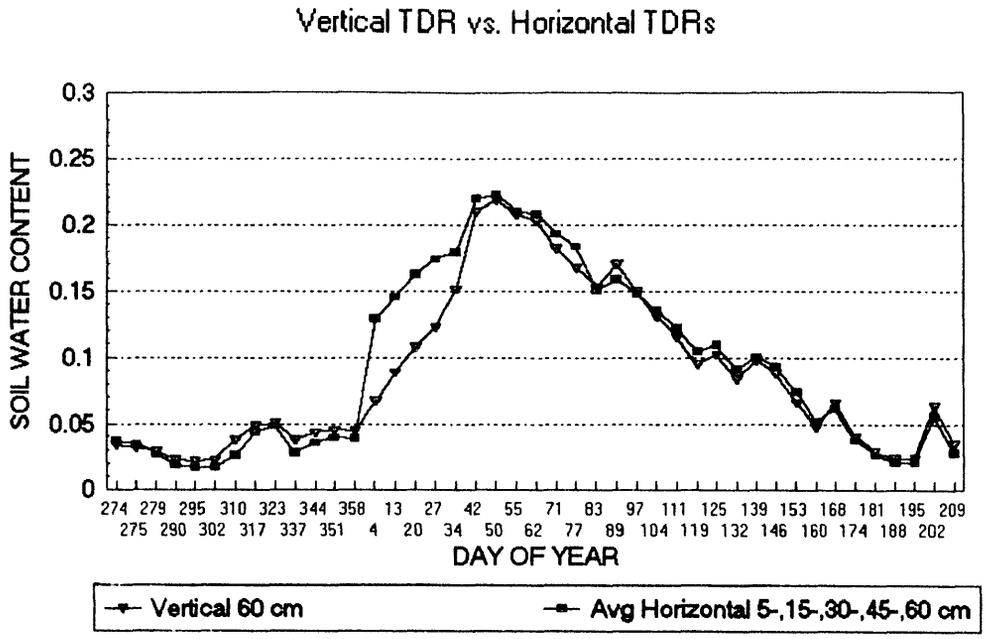

Figure 11.

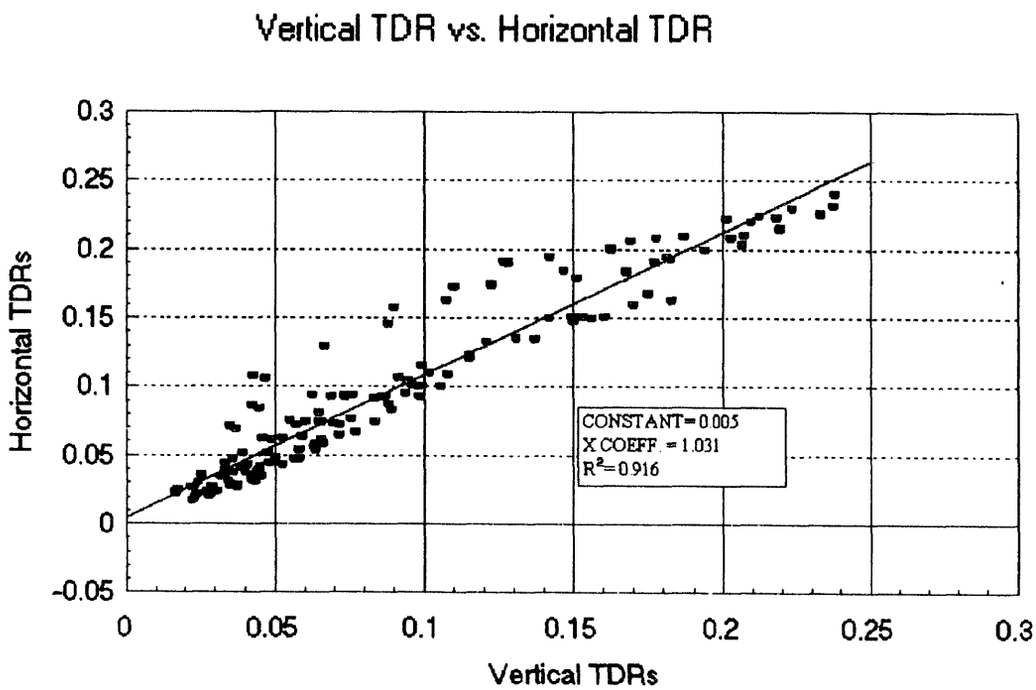

Figure 12.

DATE
FILMED
8/4/94

END