Contributed to Proc. of Workshop on Relativistic Heavy Ion Physics, Riken Institute for Physical & Chemical Research, Saitama, Japan, 1/24/92

Conf-920197--1
OG 1182
BNL-47170

THE PHENIX EXPERIMENT AT RHIC

S. Aronson

Brookhaven National Laboratory
Upton, New York, 11973

BNL--47170
DE92 010173

Abstract

We review the current status of the design of a major RHIC detector which focuses primarily on the detection of dilepton pairs, direct photons, and selected hadron signals. The physics motivation and goals, the present conceptual design, and various technical issues are presented and discussed. The plan for continuing the design work over the next year is outlined. [1]

DISCLAIMER

This report was prepared as an account of work sponsored by an agency of the United States Government. Neither the United States Government nor any agency thereof, nor any of their employees, makes any warranty, express or implied, or assumes any legal liability or responsibility for the accuracy, completeness, or usefulness of any information, apparatus, product, or process disclosed, or represents that its use would not infringe privately owned rights. Reference herein to any specific commercial product, process, or service by trade name, trademark, manufacturer, or otherwise does not necessarily constitute or imply its endorsement, recommendation, or favoring by the United States Government or any agency thereof. The views and opinions of authors expressed herein do not necessarily state or reflect those of the United States Government or any agency thereof.

[1]This manuscript has been authored under contract number DE-AC02-76CH00016 with the U. S. Department of Energy. Accordingly, the U. S. Government retains a non-exclusive, royalty-free license to publish or reproduce the published form of this contribution, or allow others to do so, for U. S. Government purposes.

MASTER

DISTRIBUTION OF THIS DOCUMENT IS UNLIMITED

1 Physics: Motivation, Goals, Detector Issues

The PHENIX collaboration has as an overall objective the detection and study of the state of nuclear matter called the Quark-Gluon Plasma (QGP). We propose to proceed through a study of electromagnetic probes in conjunction with other potential signals of the plasma. We believe that a phase transition will only be revealed through the programmatic study of a broad array of potential signatures as a function of energy density in both A-A and p-A collisions. Since some of the potential signatures involve rare processes and small effects, the detector must be capable of taking data at the highest luminosities expected to be provided at RHIC.

Below we discuss in some detail the specific physics goals we will pursue in PHENIX:

1.1 Dileptons

There are two aspects of the dilepton spectrum of interest to us in relativistic heavy ion collisions, namely the dilepton decays of the vector mesons and the continuum dilepton spectrum in the m_T range (about 1 to 3 GeV) where a detectable thermal signal might be expected.

Dilepton decays of the ρ, ω,ϕ and J/Ψ should be accessible with dielectrons; ϕ, J/Ψ and Υ would be accessible with dimuons. They are all interesting for different reasons: The yield of the ρ is a direct indicator of a high temperature hadron gas. If a long-lived hot hadron gas is produced, one might see a dramatic change in the ratio between $\rho \rightarrow e^+e^-$ and $\rho \rightarrow \pi^+\pi^-$. The ω should be much less affected due to its longer lifetime. The ϕ may change its width and its branching ratio into e^+e^- because of K mass changes following chiral symmetry restoration; also the ϕ is carrying only strange quarks, so a ϕ enhancement is predicted when a plasma is formed. A measurement of J/Ψ suppression determines the screening length in the plasma if one can extend the measurement to sufficiently high values of p_T. Here a combination of central electron detection and forward muon detection can provide the necessary acceptance; Υ should serve as a calibration point in the measurement of the screening length, since it is much smaller than the J/Ψ. It should be noted that J/Ψ suppression (and other potential signals of QGP formation) can be mimicked by other nuclear processes. As stated above, only a coordinated investigation of many potential signals will provide decisive information on the plasma.

The measurement of the continuum dilepton spectrum is sensitive to the initial state of the thermal system produced in the collision. The rate of production of pairs (primarily via quark-antiquark fusion) should be proportional to $(dN/dy)^2$ and the pair m_T distribution is a measure of the initial temperature. Although difficult to measure because of the presence of continuum dileptons from other physics processes and combinatorial backgrounds (discussed in more detail below), this is an important goal for the experiment. Above the J/Ψ mass Drell-Yan dileptons and open charm combinatorial backgrounds dominate the continuum spectrum. Below the ρ, the spectrum is dominated by combinatorial background from Dalitz and conversion electrons. Thus it appears that the best opportunity to observe a thermal signal lies in the pair mass range between the ϕ and the J/Ψ. While this region is accessible with electron pairs, muon detection will be very important for measuring

the charm backgrounds (via e-μ coincidences) and the high m_T Drell-Yan dileptons. The dimuons also can give access to these signals over a wide range in rapidity, which could help the understanding of the dilepton production mechanisms involved. The charm and Drell-Yan signals are also interesting in their own right.

1.2 Direct Photons

The detection of direct photons is also a major physics goal for the collaboration. Photons from the plasma are thermally emitted, with approximately exponential spectrum, and inverse slope constant proportional to the initial temperature (more precisely to the temperature history weighted with T^3) of the QGP. The dominant process of photon production is gluon compton scattering. Because of theoretical limitations, calculations of the photon spectrum are confined to $p_T > 1$ GeV/c. Little is known as to how the spectrum looks below 1 GeV/c. The main experimental problem is to find these photons under the background from π^0 and η decays. A measure of the difficulty of the experiment is the $\frac{\gamma}{\pi^0}$ ratio as function of p_T . For $\frac{\gamma}{\pi^0}$ less than a few percent the measurement is very difficult or impossible, while for $\frac{\gamma}{\pi^0}$ greater than 30% the measurement should be relatively easy. Theoretical calculations imply that photons from the QGP should be best visible for $p_T < 3$ GeV/c. For $p_T > 5$ GeV/c, the photon spectrum is believed to contain little information on the plasma, although as a test of perturbative QCD (including initial state scattering) it is interesting physics.

From the above it is clear that a direct photon measurement implies a statistical subtraction of the photons from π^0 and η decay. The direct photon measurement requires that π^0's and η's be measured in the same detector for approximately the same p_T range as the photons. The necessity to measure the η well drives the photon detector acceptance. Its required energy and angular resolution are essentially fixed by the need to determine precisely, from a spectrum with a large combinatorial background and in a high multiplicity environment, the p_T dependence of the π^0 spectrum.

1.3 Hadrons

Although the primary focus of PHENIX is leptons and photons, a number of hadron measurements are very important to include as well. In general, the correlation of many potential signatures is a central feature of our philosophy. Many of the potential signatures of plasma formation involve measurements in the hadronic sector. Those that we have determined are most important for us to measure within the scope of PHENIX include single particle p_T spectra, two-particle correlations (HBT), $\phi \rightarrow K^+K^-$, production of antinuclei, and jets (by triggering on high- p_T leading particles).

The key detector issues for the hadron measurements are acceptance, particle ID, two-track resolution, and momentum resolution. A solid angle of $\sim$ 0.5sr is found to be sufficient. This is quite comparable to the aperture required for the direct photon detection and would fit well within the dielectron aperture. Good time-of-flight is the main particle ID requirement. Momentum resolution is largely driven by the interferometry. The study of large

($\sim$ 20fm) sources requires the observation of momentum correlations at the 10 MeV/c level, so very good momentum resolution (as well as two-particle resolution) is important.

2 "Strawman" Detector Concept

The overall aperture for detection of everything except muons in the forward/backward direction is in the form of two arms each subtending 90° in azimuth (ϕ) and ± 0.5 units in pseudorapidity (η), roughly equivalent to a polar angle (θ) acceptance of $\pm 30^o$ centered at $\theta = 90^o$. See Figure 1. Within this aperture, which is to be fully active for electrons, are subsets for photons ($\Delta\phi = 90^o, \Delta\eta = \pm 0.2$) and for hadrons (same size as for photons). The instrumentation for these subsets is discussed below. For muons, cones with $\theta = 30^o$ around the beam direction on each side are available. High momentum muons are also accessible behind the electron arms. The two electron arms are not exactly back-to-back (i.e. not 180° apart). The gap between the edges of the two 90° apertures is about 45° on one side and hence 135° on the other. This is to minimize the acceptance dip for dielectrons at moderate pair p_T inherent in a two-arm design, while still keeping good acceptance for low p_T pairs. The angular gap is not yet optimized. The magnet design (discussed below) allows us flexibility in choosing this angle.

We have chosen an axial field direction for two principal reasons. First, the apertures described above have a greater extent in azimuthal than in polar angle. For this geometry an axial field minimizes the magnet gap. Second, the "source size" in the bend plane of an axial field is the transverse size of the RHIC luminous region, which is very small. This can be advantageous for momentum determination at the trigger level.

The magnet design concept, shown in Figure 2, is an open axial field magnet. There is no coil in the detector apertures, and there is full access to the instrumentation in these apertures. In the proposed design there are two independent sets of coils at different radii. These can be powered in the same sense to provide a field integral of $\sim 1T - m$ which decreases in strength monotonically from $r = 0$, or they can be run in the opposite sense. In the latter case a field integral of $\sim 0.3T - m$ can be achieved with a low-field region at small radius. Figures 3 and 4 and Table 1 give some idea of the field distribution and magnet parameters. The option of providing a low-field region around the collision point is important for background rejection in the dielectron channel, as discussed in more detail below.

The polar angle opening is nominally $\pm 30^o$ and the poles are also backed away from the crossing point by 1 meter each because of the length of the luminous region. The size of the gap between poles is a parameter that needs study. Reducing it reduces the stored energy, but puts the poles (which are sources of scattered particles and which are attended by large radial field components) closer to the detector components. Field calculations are underway on the design shown in Figure 2 and variants of this. Potential problems are the strong radial field components near the poles (which complicate tracking), and the fringe field in the tracking and TOF regions ($r \geq 3$m). The return legs connecting the poles are 2 or 3 beams of modest azimuthal extent so most of the field volume is completely accessible from outside. The pole tips of this magnet are expected to serve as hadron absorbers for

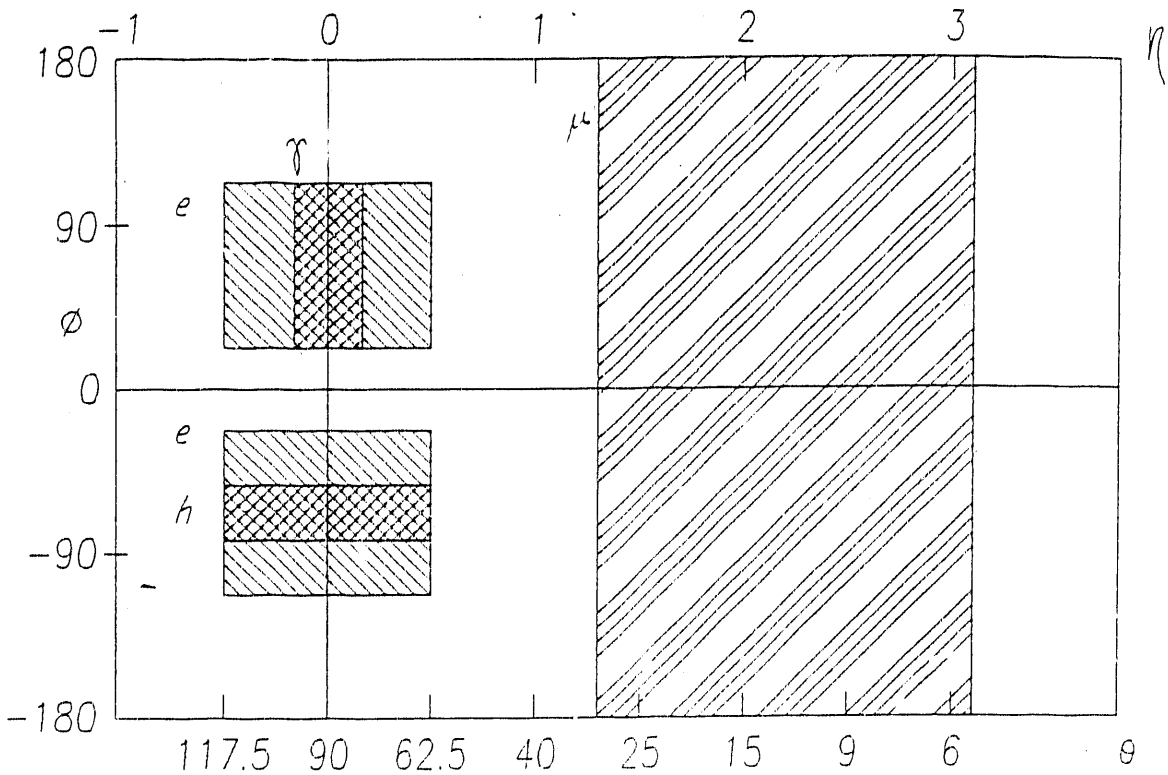

Figure 1: Geometrical apertures for detection of e, h, γ, and μ.

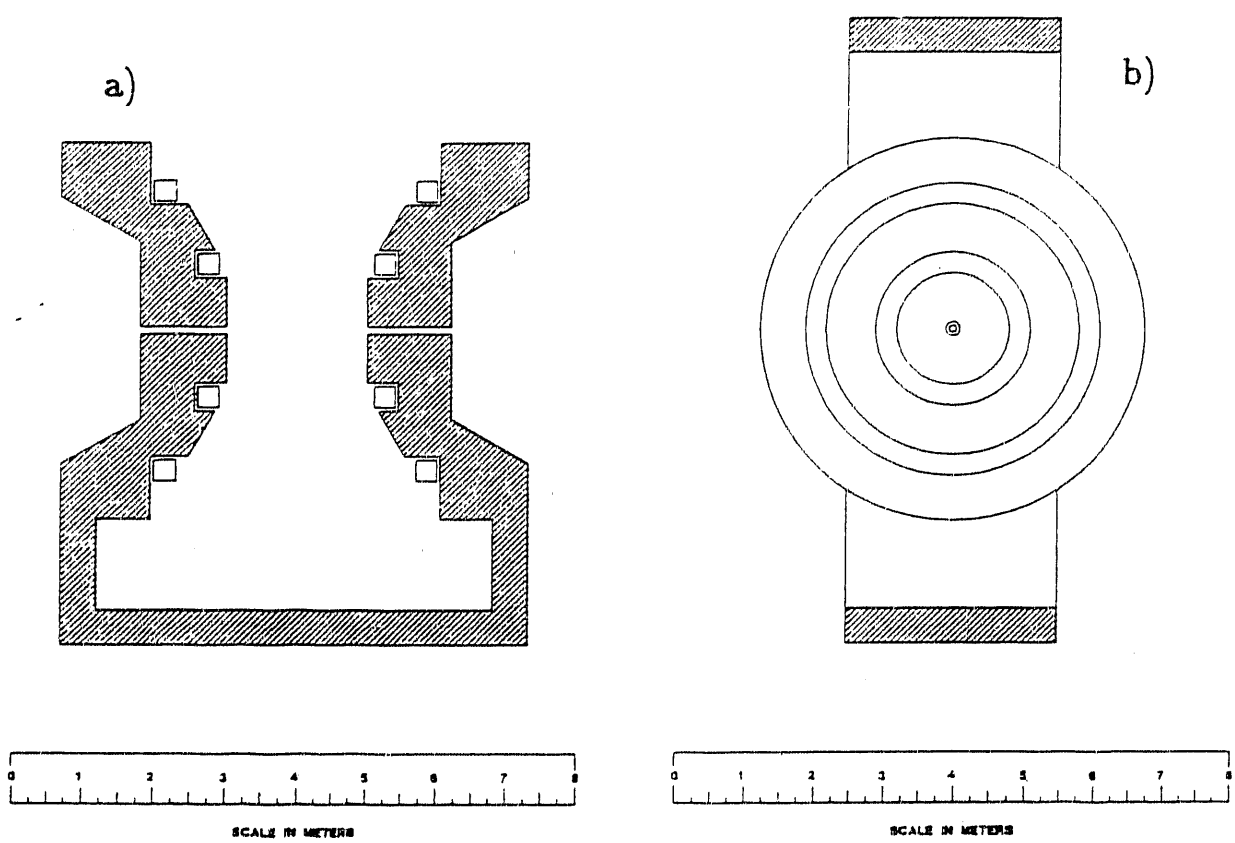

Figure 2: Axial field magnet with two independent coils. a) Side view; shows return yoke at bottom only. b) End view; the concentric circles indicate the coils.

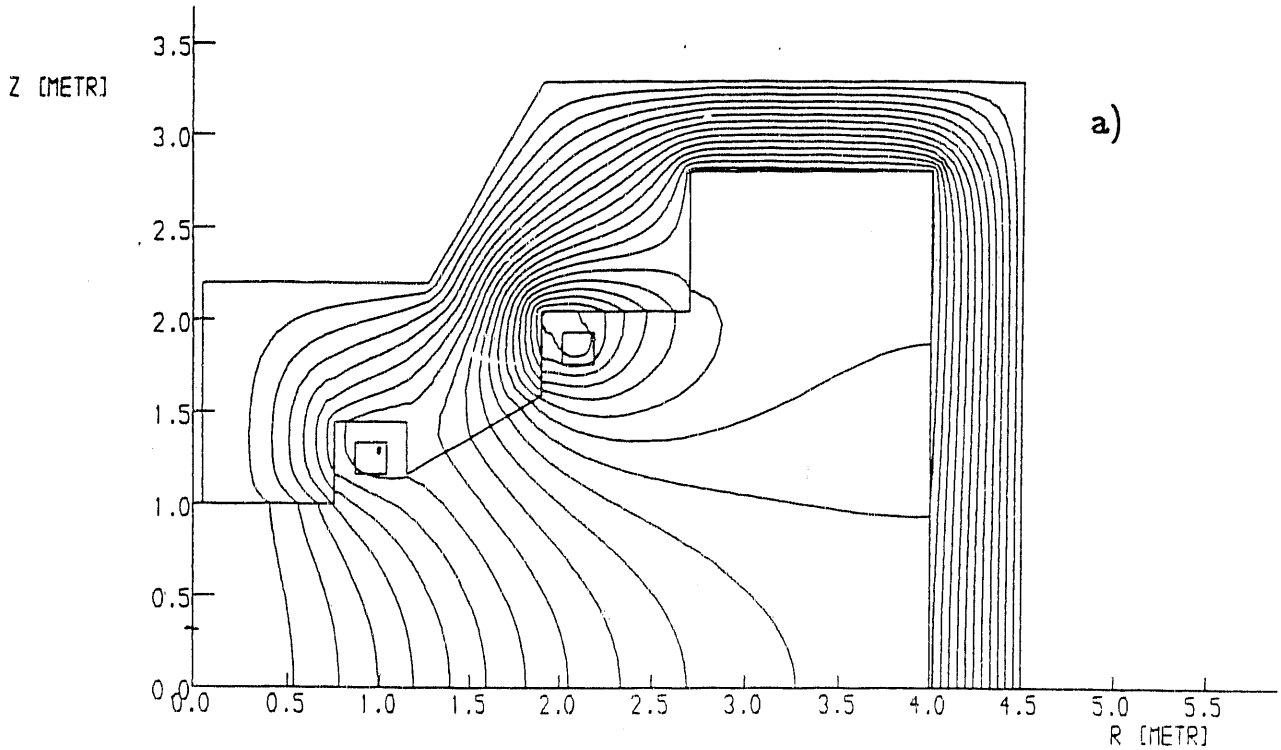

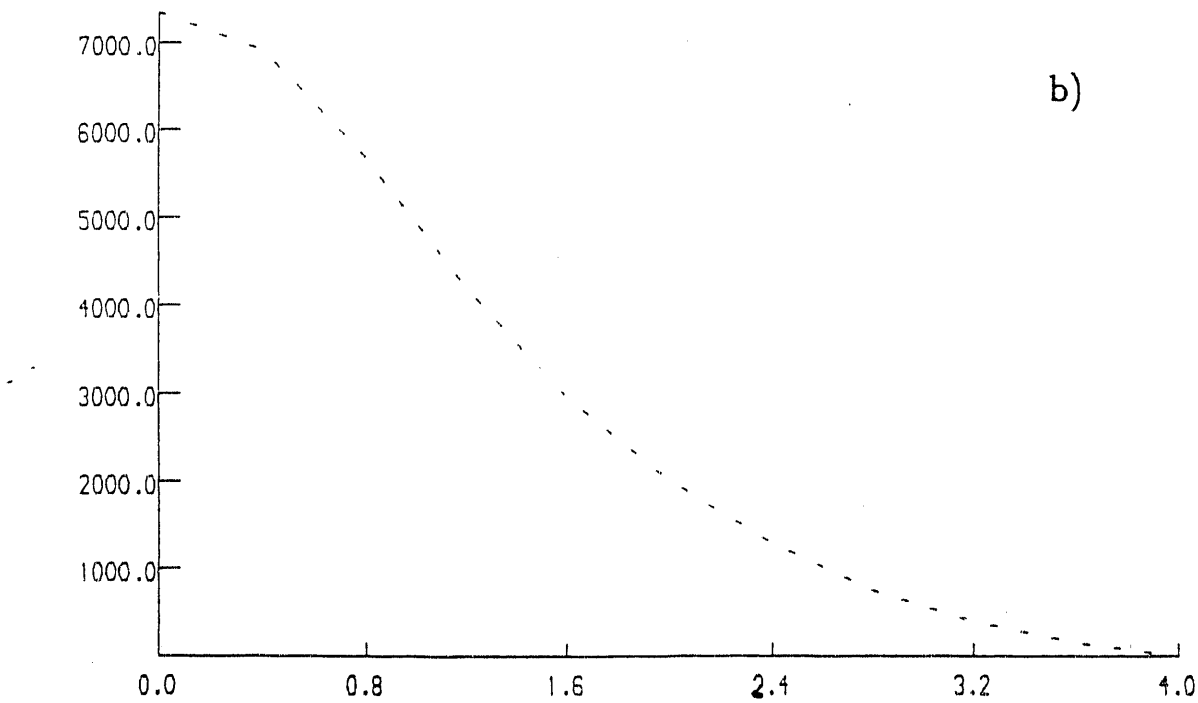

Figure 3: Magnetic field for coils run in additive mode (++). a) Field lines through section of magnet in Z (beam direction) and R (radial direction). b) Field strength in Gauss, as a function of radial distance.

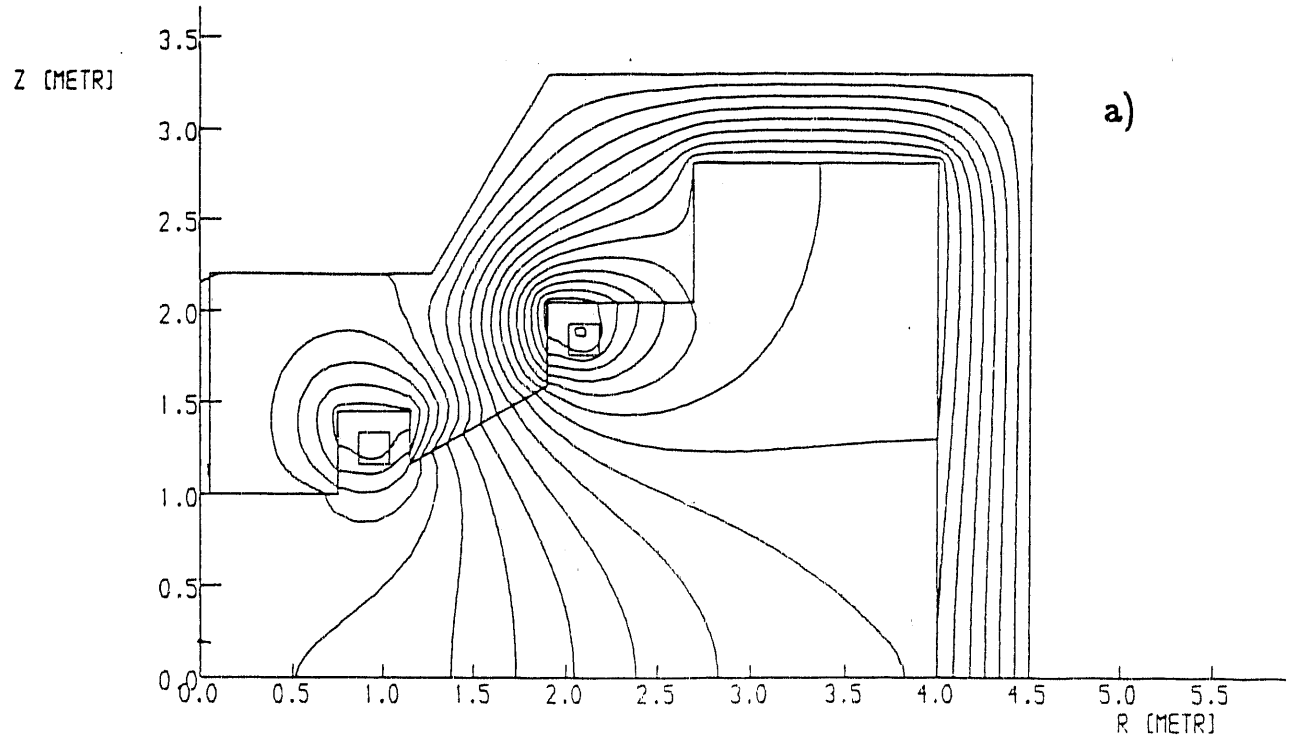

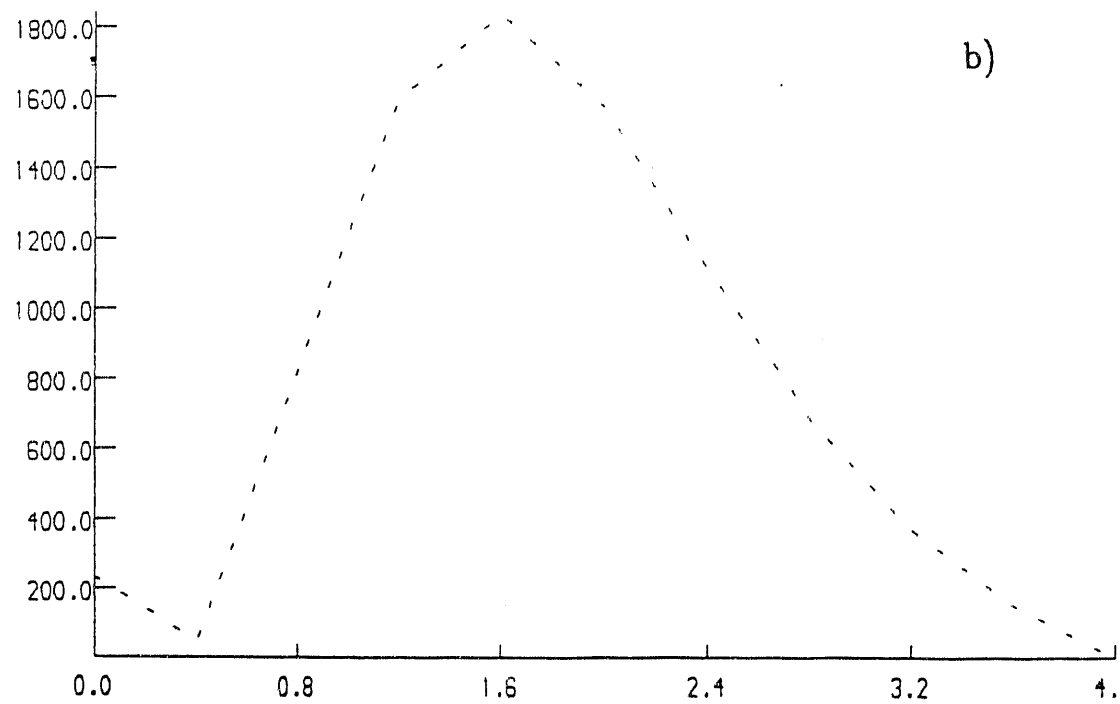

Figure 4: Magnetic field for coils run in opposing mode (+ -). a) Field lines through section of magnet in Z (beam direction) and R (radial direction). b) Field strength in Gauss, as a function of radial distance.

Table 1: Magnet Properties

Current Configuration	+ +	+ -
Current Inner Coil	0.57 x 10^6 A-turns	0.57 x 10^6 A-turns
Current Outer Coil	0.46 x 10^6 A-turns	-0.46 x 10^6 A-turns
Field Integral		
$\int_0^{4m} B_z\, dr$ (θ=90°)	1.12 Tm	0.32 Tm
$\int_0^{4m} B_z\, dr$ (θ=60°)	1.13 Tm	0.37 Tm
$\int_0^{0.5m} B_z\, dr$ (θ=90°)	-	0.004 Tm
$\int_0^{0.5m} B_z\, dr$ (θ=60°)	-	0.011 Tm
Stored Energy	13.2 MJ	8.8 MJ

endcap dimuon spectrometers. The effects of the fields in this iron on muon trajectories is also under study.

Figure 5 is an overview of the proposed detector configuration showing schematically the location of detector elements. These elements are discussed in Section 3, along with issues of resolution, background rejection and technology choice.

3 Detection, Rejection, Technology

Below we discuss a number of detector issues which constrain how we address our physics goals in PHENIX:

3.1 Electron detection

This is the most complex part of the apparatus, involving a number of technologies to reject background over the whole electron momentum spectrum of interest (less than 100 MeV/c to greater than 3 GeV/c). A key question involves the background arising from Dalitz decays of π^0 (and to a lesser extent η). For Dalitz pairs which enter the tracking system one can make invariant mass cuts. For those in which one of the pair is very low momentum, one would like to detect the soft particle before the magnetic field. This latter approach has been studied in detail for the case of a RICH counter. Other technologies are under study for this application, including dE/dx in a silicon or gas tracker, but they all suffer at some level (dependent on electron threshhold) from multiplicity-induced blindness. That is, as the level of multiplicity increases, the chance of falsely rejecting a good electron based on a nearby additional electron signal increases dramatically. There is now general agreement among different simulations on the level of false rejection and on the amount of background rejection as functions of multiplicity and threshhold. This type of Dalitz detection/suppression will be important for detection of the e^+e^- thermal continuum between the ϕ and the J/Ψ ; it appears that we

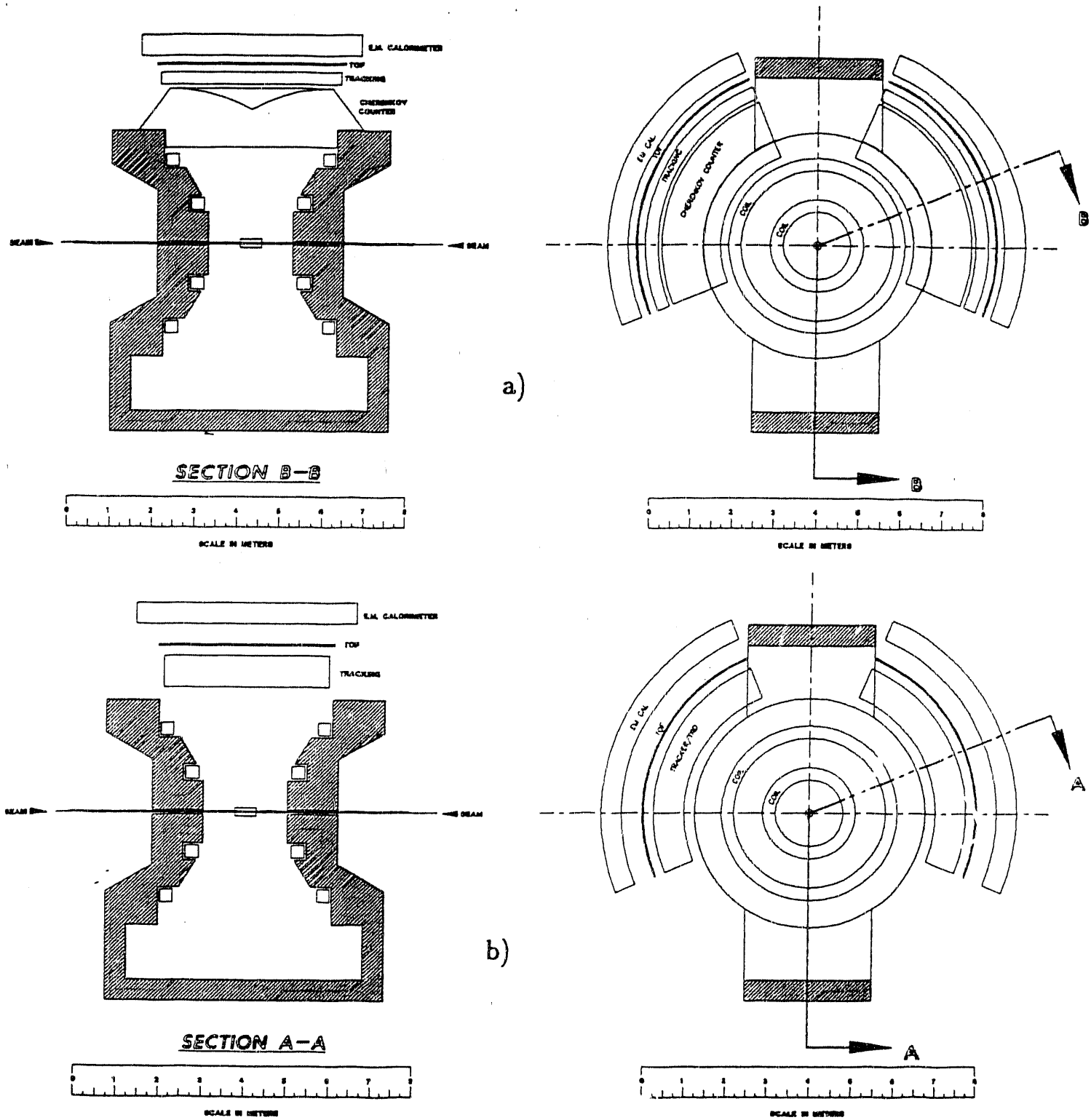

Figure 5: Two proposed detector configurations. Side view on the left, and end view on the right. a) Electron ID via Cherenkov Counter, TOF, dE/dx and EM calorimeter. b) Electron ID via TRD, TOF, dE/dx and EM calorimeter.

will not need it for detection of the vector mesons in the e^+e^- channel (except possibly the ρ).

Although it is not clear what technological approach to Dalitz rejection should be taken, it seems prudent to retain the possibility of a low field region as afforded by the present magnet concept.

The other main source of combinatorial background besides Dalitz electrons is misidentified hadrons. A number of different detector systems will be needed to cover the range of electron momenta. TOF, dE/dx, Cherenkov, TRD and calorimeter/shower counter systems are under consideration. We need to design for a hadron misidentification probability $\sim 10^{-4}$. Issues regarding technology choice include:

- Possible combined function systems (i.e., TRD+dE/dx+tracking) vs. separate systems. This is an issue of tracking precision and multiple scattering.

- Full EM calorimetry appears to be required over the whole electron aperture as an important element in electron triggering. Calorimetry of the quality required for direct photon detection would not be affordable. Sampling calorimetry is under study. Liquid argon, scintillator tiles + fibers, and gas chamber readout are possibilities. The issue is one of resolution vs. granularity in optimizing the e/hadron discrimination.

- Some forms of electron ID (like dE/dx) produce much more data per electron candidate than others (like Cherenkov counters). On the other hand Cherenkov counters (especially RICH) have not been shown to work reliably in a high-multiplicity environment. The choice of electron ID around 1 GeV/c in electron momentum will require further study (including R & D) of these relative strengths and weaknesses.

- TOF precision and cost for electron-hadron separation, as compared to that required for hadron signals, requires study. Scintillator-based EM sampling calorimetry may provide sufficient TOF precision for electron ID, eliminating the need for an additional TOF system, except in the hadron aperture.

It is important to have a balanced approach to Dalitz and hadron rejection, so that we don't overkill one beyond the point where we are limited by the other.

3.2 Photon detection

In order to push the photon measurement down to $p_T \sim 1$ GeV/c the detector requirements are i) sufficient aperture to detect η decays, and ii) sufficient resolution to be able to see and accurately measure the $\pi^0$and η peaks in the two-photon combinatorial spectrum. A single detector measuring $20^o \times 90^o$ and at a distance of about 5m has sufficiently large aperture and sufficiently low pixel hit probability to make this measurement. With pixels of transverse dimension ~ 1 Moliere radius the photon detector has 8,000 to 10,000 elements. The threshhold reached depends on the resolution of the detector elements. Comparing Pb-glass (statistical resolution coefficient $\sim 6\%$) to CsI ($\sim 2\%$), shows an improvement of order 400 MeV/c in the p_T threshhold for the latter. The question becomes one of cost vs. performance. An additional issue is calibration and monitoring of either system, as a

constant term $\leq 1\%$ would be required in order to benefit from the intrinsic high resolution. In confronting the cost/performance issue, we looked at alternatives to pure Pb glass and pure scintillating crystal solutions. Hybrid arrangements which supplement the glass with some (several thousand) crystals appear to have essentially the same p_T threshhold as an all-crystal array.

A small array of high resolution crystals for inclusive photon measurements could also be considered. It is more difficult to extract physics from such a measurement. Only $\frac{\gamma}{\pi^0}$ ratios larger than 10% would likely be accessible, while with the statistical approach we think 5% is the systematic limit. While an all-Pb glass array remains an acceptable option for first operation, numerous possibilities for adding significant amounts of higher resolution at reasonable cost will be explored. These possibilities include foreign contribution.

In the process of considering alternative technologies for high resolution EM calorimetry, we took a new look at the radiation environment at RHIC. This exercise convinced us that at the 4.5 to 5 meter distance appropriate for the photon detector, beam-beam interactions produce Rads/year, not kRads/year. The real issue is dose due to beam manipulations and accidental beam loss. This is one of a number of questions which require more interaction with the RHIC accelerator physicists.

3.3 Hadron detection

Studies indicate that for measurements of $\phi \rightarrow K^+ K^-$ and for HBT on small ($\sim$ 1fm) sources an acceptance of about 0.5 steradian would be sufficient. For the field integral available with the present magnet design, multiple scattering from about 1% of a radiation length of material, and two-particle separation of $\sim$ 5mm at 4m, the required resolution for HBT and ϕ physics can in principle be achieved. Much further study is required to specify how to do the track finding and reconstruction in this environment. As far as particle ID is concerned, the electron spectrometer requires TOF (if dE/dx is used for electron ID), although with resolution not better than $\sim$ 500ps. For the part of the aperture which also functions as a hadron spectrometer, timing resolution $\sim$ 70ps would be desirable.

3.4 Muon detection

Good acceptance for J/Ψ , high mass Drell-Yan, and e-μ signatures appears achievable inside $\theta = 30°$. Above a p_T of $\sim$ 2.5 GeV/c muons at $\eta = 0$ are detectable behind the electron spectrometers with little background, even without the aid of a hadron absorber in the central region. The addition of "muon filters" behind the EM calorimeter opens up this avenue of dimuon and e-μ detection, resulting in a significant improvement in high-mass and high- p_T acceptance, as well as extending the rapidity range of the acceptance. It should be pointed out that for the e-μ signal, which is important for measuring the open charm background in the dilepton continuum measurements, a better e/hadron discrimination may be required than in the dielectron signal. This is under study.

The main detector issue for dimuons is integration of the endcap muon spectrometer with the magnet for the central region. This will have to be iterated with the magnet design. The type of magnet to be used in an endcap is also being considered. Both dipoles and

toroids are possible in principle; they differ as to their acceptance, their interaction with the accelerator, and their integrability with the central magnet. Possibilities include existing large aperture spectrometer magnets or their coils.

4 Near-term Schedule of the Design Process

Work on the design of the PHENIX detector during the rest of 1992 can be sumarized as follows:

- **January-February:** Reorganization of the collaboration, R&D Plan, Discussions with foreign participants.
- **January-May:** Completion of the Conceptual Design.
- **May-June:** Test beam run at AGS for R&D work.
- **June:** TAC Pre-CDR Review, TAC-mandated subsystem reviews.
- **July-November:** Work on the CDR.
- **November:** CDR completion, TAC CDR Review, CDR approval, start of PHENIX construction funding.

END

DATE
FILMED
5/13/92