AIIM

Association for Information and Image Management

1100 Wayne Avenue, Suite 1100
Silver Spring, Maryland 20910

301/587-8202

Centimeter

Inches

MANUFACTURED TO AIIM STANDARDS
BY APPLIED IMAGE, INC.

1 of 1

CONF-940225--73 ANL/CMT/CP--82230

TREATMENT OF MIXED RADIOACTIVE LIQUID WASTES AT ARGONNE NATIONAL LABORATORY*

George F. Vandegrift, David B. Chamberlain, Cliff Conner, Joseph C. Hutter, Ralph A. Leonard, Hyo No, Luis Nuñez, Jacob Sedlet, B. Srinivasan, and David G. Wygmans

Argonne National Laboratory
Chemical Technology Division

MAR 2 1 1994
OSTI

ABSTRACT

Aqueous mixed waste at Argonne National Laboratory (ANL) is traditionally generated in small volumes with a wide variety of compositions. A cooperative effort at ANL between Waste Management (WM) and the Chemical Technology Division (CMT) was established, to develop, install, and implement a robust treatment operation to handle the majority of such wastes. For this treatment, toxic metals in mixed-waste solutions are precipitated in a semiautomated system using $Ca(OH)_2$ and, for some metals, Na_2S additions. This step is followed by filtration to remove the precipitated solids. A filtration skid was built that contains several filter types which can be used, as appropriate, for a variety of suspended solids. When supernatant liquid is separated from the toxic-metal solids by decantation and filtration, it will be a low-level waste (LLW) rather than a mixed waste. After passing a Toxicity Characteristic Leaching Procedure (TCLP) test, the solids may also be treated as LLW.

INTRODUCTION

The project began in December 1992 as a paper study that reviewed (a) Hanford's waste acceptance criteria for LLW disposal, (b) scientific literature, and (c) existing commercial methods for treating for toxic-metal-containing waste. A preliminary plan for treating the mixed waste was completed in February 1993 (1). The next step was developing a treatment method based on ANL-specific needs through laboratory studies with synthetic and actual waste samples; this work was reported at the ASTM meeting (2). The full-scale treatment equipment was assembled from commercially available components and was tested with synthetic feeds. It has been set up in its permanent location, appropriate permits have been received, and hot testing began in January 1994. Operators have been trained, and full-scale treatability studies are underway. This paper describes the technology behind the process, the path to Environmental Safety and Health (ES&H) approvals, the final design of the facility and its operations, and the results of our initial treatability studies.

DISPOSAL/TREATMENT OPTIONS FOR ARGONNE MIXED WASTE

Most of the mixed waste generated at Argonne National Laboratory (ANL) is from our research laboratories. These wastes are generated over weeks to years of experimentation, sometimes by several experimenters, and stored in the laboratory waste accumulation areas until the receptacle is near full. At this time, the principal generator completes a waste form, describing the contents to the best of his/her ability. If the waste is designated as mixed, the bottle is stored by ANL Waste Management (WM) awaiting treatment. Figure 1 shows the plan for classifying waste, for segregation and treatment at ANL. The current facility will treat inorganic, non-transuranic (TRU) waste that is hazardous because it is corrosive and/or contains toxic metals. The treatment of other wastes will be tackled in the future.

INSERT FIG. 1 HERE

Because of the variety of our R&D activities, the individual bottles containing the waste vary widely in size (500 mL to 20 L), contents, and certainty regarding content composition. Table I illustrates the variety of mixed wastes generated at ANL. (Those wastes in bold type have already been treated by the aqueous mixed-waste process described in this paper.) A process to treat these wastes must be robust and amenable to treatment of small volumes.

INSERT TABLE I HERE

MASTER DISTRIBUTION OF THIS DOCUMENT IS UNLIMITED

*Work supported by the U.S. Department of Energy under Contract W-31-109-38.

One objective for ANL's treatment of aqueous mixed wastes is to prepare it for economical, safe disposal at the Hanford site (Richland, Washington). Economy can be achieved by reducing the volume and changing the classification from mixed waste to low-level waste (LLW). Currently, ANL is charged \$75/ft^3 (2650/m^3) for LLW disposal and \$200/ft^3 (\$7060/m^3) for storage and eventual treatment at Hanford for mixed LLW. To meet the above objective, our liquid mixed waste process is geared to do the following:

- Eliminate the corrosivity characteristic of the waste by neutralization to a pH in the range of 2-12.5.
- Precipitate toxic metals from solution to concentrations below Resource Conservation and Recovery Act (RCRA) concern (see Table II). This allows the solutions to be concentrated in our LLW evaporators and concentrator.
- Form a solid containing insoluble toxic-metal-hydroxide or -sulfide salts that can be classified as LLW by passing the Toxicity Characteristic Leaching Procedure (TCLP).

INSERT TABLE II HERE

The Hanford requirements are given in "Hanford Site Solid Waste Acceptance Criteria" (3). This general document refers users to documents of the Washington State Department of Ecology (4) and the U.S. Environmental Protection Agency (5) for many of the details. Our "Preliminary Plan for Treating Mixed Waste" (1) discusses in further detail ANL's approach to mixed waste treatment based on Hanford's criteria.

The RCRA regulatory levels, listed in Table II, determine if a liquid waste exhibits the toxicity characteristic for a hazardous waste. The toxicity of a solid is determined by applying the TCLP, as given in (5). The 32 organic components, which are also part of the RCRA, are not listed here because only mixed wastes contaminated with toxic metals were considered. The Washington (State) Administrative Code classifies a toxic waste as a dangerous waste (DW) if the concentration of a metal in Table II exceeds the level shown there. However, if this metal concentration is 100 times the level shown, the waste is re-classified as an extremely hazardous waste (EHW). If more than one listed metal is present, the fractional concentration of each metal is calculated relative to its regulatory level. If the sum of these fractions is greater than 1.0, the waste exhibits the toxicity characteristic.

Waste Management at ANL has shipped 6,700 ft^3 (190 m^3) of mixed waste and 15,500 ft^3 (440 m^3) of LLW to Hanford. The following process has to be followed for shipping waste:

- An audit by Hanford must be passed. Hanford audits the generator's Waste Certification Plan and other related procedures and waste-management areas. The generator must pass the audit and be certified as an approved waste generator. This may take up to a year, depending on how thorough the Waste Certification Plan is written and whether procedures for waste characterization, sorting, waste pickup, etc., are in place. Hanford then continues to conduct annual audits to ensure compliance.
- Once approval is granted, the generator must fill out SDAR (Storage/Disposal Approval Record) request forms before shipping waste to Hanford. This form requires the generator to provide the following detailed information: type of containers, radionuclides present, and physical composition of the waste. In addition, for mixed-waste shipments, generators need to fill out Radioactive Mixed Waste Attachment Sheets, which list the hazardous constituents, their mass, and their physical form.
- Once the SDAR request is submitted, Hanford has thirty working days to respond. Upon Hanford's thorough review of the SDAR request and any additional information requested of the generator, Hanford will write the final SDAR. The SDAR will outline the type of wastes to be shipped, the containers to use, and the packaging requirements. It will also list detailed container labeling requirements, shipping instructions, and documentation requirements. The SDAR is to be followed to the letter, without exceptions. If there are questions or issues that need to be resolved, Hanford is contacted, and changes to the SDAR are made through a formal revision process.
- The generator must package the waste as specified in the SDAR and ensure that Federal Department of Transportation (DOT) regulations are met. At this point, a local shipper is contacted to make shipping arrangements.

Waste treated by the new process has yet to go through this procedure.

HYDROXIDE/SULFIDE PRECIPITATION OF TOXIC METALS

Removal of the RCRA metals (As, Ba, Pb, Cd, Cr, Ag, Se, and Hg) from mixed waste can be accomplished by precipitation (1, 6, 7, 8). The metals are converted to an insoluble form and removed from solution. Although there are other separation methods, precipitation was chosen because of its simplicity and cost effectiveness. Our earlier publications discuss the chemical and engineering bases of this treatment (1, 2). Eliminating the corrosivity characteristic of the waste and precipitation of Pb, Cd, Hg, and Cr is of greatest concern for mixed waste treatment at ANL. The treatment of these wastes is summarized below. In general, treatment consists of acid neutralization, during which toxic metals are precipitated as hydroxides, followed by sulfide addition to convert the metal hydroxides to metal sulfides. If chromium is present, a reduction step is necessary before neutralization to ensure that no Cr(IV) is present. The acid neutralization and sulfide addition are automated by the use of pH and sulfide control loops.

Waste Containing Chromium Only

Ferrous iron, as solid $FeSO_4 \cdot 7H_2O$, is added to the waste solution to reduce Cr(VI) to Cr(III). Following complete conversion of Cr(VI) to Cr(III), the waste solutions are added to 5% $Ca(OH)_2$ slurry until the pH drops to ≤ 8. The tank is stirred for 30 min with the pH controller on to allow for slow kinetics. Solids are allowed to settle. The supernatant is decanted and filtered, and the solids are set aside for eventual treatment in the concentrator.

Wastes Containing Cadmium, and/or Lead, and/or Mercury

Waste solutions are added to a 5% $Ca(OH)_2$ slurry until the pH drops to ≤ 10. The sulfide-addition monitor/controller is adjusted to settings based on the pH of the slurry. Concentrated Na_2S solution is fed to the slurry until the total sulfide concentration in solution is ≥ 10 ppm. (The total sulfide concentration is the sum of the concentrations of H_2S, HS^-, and S^{2-}. The relative concentration of these species is a function of pH, and the sulfide selective electrode measures only S^{2-} concentration.) Because conversions of metal hydroxides to sulfides release hydroxide ion, sulfide uptake increases the pH of the solution. Therefore, pH is measured after sulfide conversion is completed, and the sulfide monitor is reset for higher pH. After additional sulfide is added, the tank is stirred for 30 min with the controller on to allow for slow conversion kinetics. Supernatant and solids are treated as above.

Wastes Containing Chromium along with Cadmium, Lead, and/or Mercury

Ferrous sulfate is added to reduce Cr(VI) to Cr(III), and the wastes are treated in the same way as those without chromium present. After sulfide addition is complete, nitric acid is added to lower the pH to ≤ 8. Supernatant and solids are treated as above.

SIMPLE HYDROXIDE NEUTRALIZATION

Radioactive waste solutions containing no toxic metals but which are hazardous solely because of their corrosivity characteristic (pH$\leq$2 or pH$\geq$12.5) are also treated in this system. Historically, almost all of such waste generated at ANL is acidic (pH$\leq$2), and our treatment procedures focus on those. The acidic waste solutions are added to a 5% $Ca(OH)_2$ slurry until the pH drops from ~12.3 to ≤ 10. When basic wastes (pH$\geq$12.5) are encountered, they are matched with an appropriate acidic waste and used in place of the $Ca(OH)_2$ slurry for neutralization of the acid. Supernatant and solids are treated as above.

EQUIPMENT DESCRIPTION

Our mixed-waste treatment facility can be pictured as having two parts--the Hydroxide/Sulfide Precipitation Unit and the Filter Skid. Figure 2 is photograph of both units. They are described individually in the following two sections.

PLACE FIG. 2 HERE

Hydroxide/Sulfide Precipitation Unit

The apparatus to treat mixed waste is shown in Fig. 3. It is described in detail elsewhere (1, 2). The precipitation tank is 36 cm in dia and, 70 cm high, and has a working capacity of 50 L. The tank is made of polyethylene and, therefore, is resistant to both acids and bases. To promote flocculation, turbine mixer impeller (10-cm dia) with a 45° pitched blade was selected to attain a high pumping capacity at a low shear rate. It has a low solidity ratio (ratio of impeller projected area to the impeller swept area), which will allow a high flow to be induced in the tank. When operated at low speed (30 rpm), the impeller readily accomplishes both solids suspension and blending. Since the tank is not baffled, the impeller shaft was inserted at an angle of 15° to the vertical axis of the tank. The impeller is rotated so that it pumps downward, the most efficient way to operate this impeller as a blending device (9).

INSERT FIG. 3 HERE

The pH control loop consists of a pH electrode, proportional controller, analog-digital converter, and a diaphragm metering pump. The pH control loop starts the diaphragm metering pump to feed either acidic waste or the 0.1M stock nitric acid used for pH adjustment. The system uses two set points: the first at pH=11, and the second one at pH=10. Until the first set point is reached, the feed pump will deliver at the maximum flow rate. At the first set point, the feed flow rate will decrease to lower and lower values as the signal pH drops. At the second set point, the flow rate will drop to zero.

The sulfide control loop consists of sulfide reference electrodes, a proportional controller, analog-digital converter, and diaphragm metering pump. The sulfide control loop activates the diaphragm metering pump to feed the 1.9M sodium sulfide solution. The system uses two set points: the first set point corresponds to ~10 ppb total sulfide, and the second set point is the potential corresponding to 10 ppm total sulfide concentration. The actual potential reading is a factor of the pH of the slurry (see Fig 4). Until the first set point is reached, the feed pump will deliver at the maximum flow rate. At the first set point, the feed flow rate will drop to lower and lower values as the signal from the electrode changes. At the second set point, the flow rate will drop to zero. The system is left in this condition for 30 min to allow for the accumulation of more sulfide during the slow conversion from metal hydroxides to metal sulfides.

INSERT FIG. 4 HERE

The system utilizes a high-flow-capacity pump, which can be used to rapidly fill or empty the tanks. Not shown in the Fig. 3 is a temperature feedback loop, which is used to shut down all the feed pumps if the exothermic neutralization reactions cause an unacceptable high temperature (>80°C). This safety feature prevents mechanical failure of the polyethylene tank, which has a glass transition temperature near 110°C (10). Inventory control ensures that the liquid level in the tank is kept at safe levels.

Filtration Skid

A versatile filtration system, incorporating a number of modules, has been designed as shown in Fig. 5. The modular design allows the filtration scheme to be varied for research purposes and for treatment of a variety of influents. As seen in Fig. 5, most modules can either be included in or isolated from the flow scheme, as desired.

INSERT FIG. 5 HERE

The bag filter, with filter elements in the 20-40 μm range, traps the bulk of the solids. A bag filter combines the advantages of high solids loading capacity and low disposable-cartridge volume, making this a valuable front-end filter. Plumbing connections in parallel with the bag filter allow the later addition of a filter press or other pre-treatment options if necessary.

Two pre-filters in parallel are included to protect the hollow fiber filter (HFF) from solids loading. Back-flushable sintered-metal elements will normally be used as the pre-filters. The metal elements are easily flushed with clean water by reversing the flow through them. If the nature or size of the particles trapped by the filter makes flushing inefficient, the sintered-metal cartridge can be easily replaced by a disposable polypropylene cartridge. Pre-filter elements in the 1-10 μm pore size range will be used.

An open connection between the pre-filters and the HFF has been included to allow the addition of a carbon filter to adsorb dissolved organics from the aqueous stream. This addition may be necessary if streams containing dissolved organics are to be processed, since such organics would wet the pores of the HFF and plug it. A carbon filter has not been included in the present design for two reasons: (a) present plans do not include processing aqueous streams containing dissolved organics and (b) incorporation of a suitably sized carbon filter would make the filter skid hard to transport. To adsorb volatile organic compounds (VOCs) dissolved in an aqueous liquid, and reduce their concentrations from the ppm range to the ppb range, the superficial loading should be 2 gpm/ft^2 (89 Lpm/m^2) (11). The depth of the filter will depend on the initial concentration of the VOCs and the desired life of the carbon bed.

The after- filter, in parallel with the HFF, is included mainly as a backup for the HFF, for streams that cannot be run through the HFF (e.g., streams containing undissolved organics, which cannot be absorbed by the carbon filter). Pore sizes for the after-filter cartridges will range from 0.1 to 1.0 μm.

The normal flow scheme, as shown in Fig. 5, will incorporate the bag filter, both pre-filters, and the HFF. Filter housings accept industry-wide standard cartridges, allowing the use of cartridges in a wide variety of pore sizes available from many manufacturers. Polypropylene filter elements will receive the most use. Each filter housing has pressure gauges upstream and downstream and a sampling valve directly downstream to aid filtration studies. All housings are made of Type 316 stainless steel and have pressure ratings of at least 150 psi (~1 MPa).

The feed is pumped through the system by an electrically driven positive-displacement diaphragm pump. This variable-speed pump has a current draw of about 20 A at 220 V and a rated output of 5 gpm (0.02 m^3/min) at 150 psi (~1 MPa). The diaphragm pump was chosen mainly because it is seal-less and self-priming. It also provides trouble-free pumping of slurries (up to 400 μm particle size) and the capability of running dry without damage. The pump has a suction-lift capacity of at least 10 ft (3 m). A pressure relief valve ensures that the design pressure of 100 psi (0.7 MPa) is not exceeded. A pulsation dampener smooths out the flow pulses generated by the pump, leaving a maximum pressure fluctuation of about ±1 psi (±7 kPa). A flex hose on the suction side of the pump connects to the waste container by means of a double-end-shut-off quick connector.

Total liquid holdup in the filtration system is about 14 gal (0.05 m^3). The maximum pressure drop expected across the system is about 95 psi (0.7 MPa). These maximums account for plumbing losses as well as pressure drop across filters and will only be encountered when all filters, simultaneously, are in need of replacement or back-flushing.

ES&H APPROVALS

Before processing could begin, documentation and permitting were required under the National Environmental Policy Act (NEPA) and the Resource Conservation and Recovery Act (RCRA). The NEPA regulates work done by government agencies. The RCRA, which is mandated by the federal government but controlled at the state level, regulates the handling, treatment, shipment, etc., of hazardous wastes. Both the NEPA and RCRA applications are processed through the ANL office for ESH/QA Oversight, which keeps programs informed of regulations, aids in filing applications, and coordinates treatability studies across the site.

The NEPA application was first submitted on July 23, 1993, requesting that the mixed-waste treatment system (chemical treatment, filtration, and concentration) be covered under existing Categorical Exclusions (CX). This request was rejected because of lack of clarity regarding whether the treatment system was to be used for long-term processing or for treatability studies. (If the system is to be used for long-term processing, an Environmental Assessment (EA) may be required; treatability studies by definition are limited in scope and duration and may be covered under a number of CXs already in place.) Re-submittal was made on September 13, 1993, requesting a CX for treatability studies. A CX was granted on October 27, 1993. After sufficient data have been gathered to prove the principle of the treatment system, another NEPA application will be filed to determine if an Environmental Assessment is needed.

Notification to the Illinois Environmental Protection Agency (IEPA), stating our intent to conduct mixed-waste treatability studies, was made on September 9, 1993. Under the RCRA, this notification is required a minimum of 45 days before the initiation of treatment. This notification, alongside compliance with the

constraints defining a treatability study, constitutes compliance with the RCRA. The constraints for a treatability study include, among other things, the limit of 1000 kg on the amount of waste that can be treated in each study. Applications for a RCRA Part B permit, allowing the long-term processing of hazardous wastes, will be made soon so that it will be in place once the treatability studies are completed.

Two separate Safety Assessment Reviews (SAR) have been conducted: one for the chemical treatment module and one for the filtration module. SARs are conducted within the division in which the work is to occur. The purpose of the SAR is to identify and evaluate all safety-related issues associated with a project.

PROCESSING

As of the writing of this paper, two types of wastes have been processed by the hydroxide/sulfide precipitation system. These wastes are given in bold-type in Table I. The Pb/Cd-contaminated wastes were acidic solutions containing radioisotopes ^{45}Ca and ^{109}Cd. The solutions contained 67 and 34 ppm lead and 0.8 and 0.5 ppm cadmium before treatment. After neutralization and sulfide addition, both lead and cadmium were below detectability limits of 0.1 and 0.02 ppm, respectively, by inductively coupled plasma-atomic emission spectroscopy (IEP-AES). Coincidentally, the activity due to the radioisotopes was also reduced to below detectability (1 dpm/mL)

The second type of waste processed was Davies-Grey titration waste. Davies-Grey is used in uranium analysis. The waste is a complex mixture, containing phosphoric acid (3.4M) with relatively minor concentrations of nitric acid (0.6M), sulfuric acid (0.2M), and sulfamic acid (0.2M). It also contains chromium (40 ppm), iron (1,200 ppm), molybdenum (80 ppm), vanadium (70 ppm), and uranium (100 ppm). The acids were neutralized by addition of the waste to calcium hydroxide; chromium and most of the other metals listed in Table II precipitate as the hydroxide. After treatment the concentration of chromium in the supernatant was below detectability (0.05 ppm). Uranium was also below its ICP-AES detectability of 1 ppm.

The solid fractions are being tested to see if they will pass the TCLP test. It is expected that the solids will pass the TCLP test, but results were not available as of the writing of this paper.

CONCLUSIONS AND FUTURE WORK

Treatment of aqueous mixed waste was taken from conceptual design to plant treatability studies in just over one year. The mixed-waste treatment facility will treat ≥95% of Argonne's toxic-metal-containing mixed waste volumes, both backlogged and projected, by the use of semiautomatic neutralization and sulfide addition. Acidic wastes containing mixtures of Pb, Cd, Hg, and Cr have been successfully treated and will be disposed of as low level wastes. The equipment and procedures are ideal for facilities that must deal with small volumes of highly variable wastes. Mixed-waste solutions containing organics cannot be successfully treated yet and await future process development.

We are presently developing a treatment facility for transuranic (TRU) wastes, following the same steps as outlined herein. The literature survey is completed, and a preliminary treatment plan for TRU waste solutions at Argonne has been drafted. Carrier precipitation will be used to remove TRU elements from acidic wastes so that the remaining solution can be concentrated in a new evaporator/concentrator system, which is in the installation stage. Depending on the initial concentration of the TRUs in the wastes, the precipitated solid may or may not be TRU waste (i.e., ≥100 nCi of long-lived alpha-emitting transuranic isotopes per gram of solid). The supernatant, after concentration, cannot be TRU waste; in some cases, a second treatment may be necessary to meet this requirement. According to plans, we will develop this process in laboratory tests and have the WM facility ready for treatability studies by the end of October 1994.

DISCLAIMER

This report was prepared as an account of work sponsored by an agency of the United States Government. Neither the United States Government nor any agency thereof, nor any of their employees, makes any warranty, express or implied, or assumes any legal liability or responsibility for the accuracy, completeness, or usefulness of any information, apparatus, product, or process disclosed, or represents that its use would not infringe privately owned rights. Reference herein to any specific commercial product, process, or service by trade name, trademark, manufacturer, or otherwise does not necessarily constitute or imply its endorsement, recommendation, or favoring by the United States Government or any agency thereof. The views and opinions of authors expressed herein do not necessarily state or reflect those of the United States Government or any agency thereof.

REFERENCES

1. G. F. VANDEGRIFT, C. CONNER, J. C. HUTTER, R. A. LEONARD, L. NUÑEZ, J. SEDLET, and D. G. WYGMANS, "Preliminary Plan for Treating Mixed Waste," Argonne National Laboratory Report, ANL-93/29 (1993).

2. H. NO, D. G. WYGMANS, D. B. CHAMBERLAIN, C. CONNER, J. C. HUTTER, C. SRINIVASAN, R. A. LEONARD, L. NUÑEZ, J. SEDLET, and G. F. VANDEGRIFT, "Treatment of Aqueous Mixed Wastes Containing RCRA Metals," Proceedings of the Second International Mixed Waste Symposium, Baltimore, MD, 13.1.1-13.1.10, August 17-20, 1993.

3. N. P. WILLIS and G. C. TRINER, "Hanford Site Solid Waste Acceptance Criteria," Westinghouse Hanford Company, Richland, WA, Report WHC-EP-0063-3 (1991).

4. Washington State Department of Ecology, "Dangerous Waste Regulations," Washington (State) Administration Code, Chapter 173-303, Olympia, WA (1991).

5. EPA, Title 40, Code of Federal Regulations, Parts 261-265, U. S. Environmental Protection Agency, Washington, DC (1991).

6. J. R. CONNER, "Stabilizing Hazardous Waste," *Chemtech*, 35 - 44 (December 1993).

7. M. C. GORONSZY, W. W. ECKENFELDER, and E. FROELICH, "A Guide to Industrial Pretreatment: Waste Water, A Variety of Mechanical and Biological Methods Are at Your Disposal," *Chem. Eng.*, 78-83 (June 1992).

8. G. GRULICH, D. G. HUTTON, F. L. ROBERTACCIO, and H. L. GLOTZER, "Treatment of Organic Chemicals Plant Wastewater with the Dupont PACT Process," *AIChE Symp. Ser.*, 129(69), 127-133 (1972).

9. J. Y. OLDSHUE, *Fluid Mixing Technology*, McGraw-Hill Book Co., New York (1983).

10. R. J. PERRY, ed., *Perry's Chemical Engineer's Handbook*, 6th ed., McGraw-Hill Book Co., New York (1984).

11. T. D. REYNOLDS, *Unit Operations and Processes in Environmental Engineering*, Wadsworth, Inc., Belmont, CA (1982).

DISCLAIMER

This report was prepared as an account of work sponsored by an agency of the United States Government. Neither the United States Government nor any agency thereof, nor any of their employees, makes any warranty, express or implied, or assumes any legal liability or responsibility for the accuracy, completeness, or usefulness of any information, apparatus, product, or process disclosed, or represents that its use would not infringe privately owned rights. Reference herein to any specific commercial product, process, or service by trade name, trademark, manufacturer, or otherwise does not necessarily constitute or imply its endorsement, recommendation, or favoring by the United States Government or any agency thereof. The views and opinions of authors expressed herein do not necessarily state or reflect those of the United States Government or any agency thereof.

Table I

TITLE: Typical Waste Compositions and Volumes*

Chemical Components	Hazardous Component	Radioactive Component	Volume, L
H_2SO_4 $Na_2Cr_2O_7$	Corrosive Cr	U	0.9
$Cd(NO_3)_2$ LiCl, KCl HCl, HNO_3	Corrosive Cd	Pu	3.8
Ca, Cu, Cd, Pb **HNO_3**	**Corrosive** **Cd, Pb**	**^{45}Ca, ^{109}Cd**	**24**
Cd, Pb **HCl**	**Corrosive** **Cd, Pb**	**^{45}Ca**	**15**
Fe, Mo, V, Cr, U **H_3PO_4, H_2SO_4**	**Corrosive** **Cr**	**U**	**20**
$Cd(NO_3)_2$ $Cu(NO_3)_2$ HNO_3	Corrosive Cd	Pu	0.9
Arsenazo III $ZrCl_4$ H_2SO_4, HCl	Corrosive As	U	2
$Zn(NO_3)_2$ HNO_3	Corrosive	Pu	1
$Cd(NO_3)_2$ HCl, HNO_3	Corrosive Cd	U	23
$Hg(NO_3)_2$ $Cu(NO_3)_2$ HNO_3	Corrosive Hg	Pu	4
$Hg(NO_3)_2$ $Zn(NO_3)_2$ HNO_3	Corrosive Hg	Pu	4
$Cd(NO_3)_2$ LiCl, KCl HCl, HNO_3	Corrosive Cd	U, Pu	19

*Wastes in bold-type have been processed; see Processing Results section

Table II

TITLE: Toxicity Characteristic List for Liquid and Soluble Solid Wastes

EPA Hazardous Waste Number	Contaminant	Regulatory Level, mg/L
D001	Ignitability	
D002	**Corrosivity**	
D003	Reactivity	
D004	Arsenic	5.0
D005	Barium	100.0
D006	**Cadmium**	**1.0**
D007	**Chromium**	**5.0**
D008	**Lead**	**5.0**
D009	**Mercury**	0.2
D010	Selenium	1.0
D011	Silver	5.0

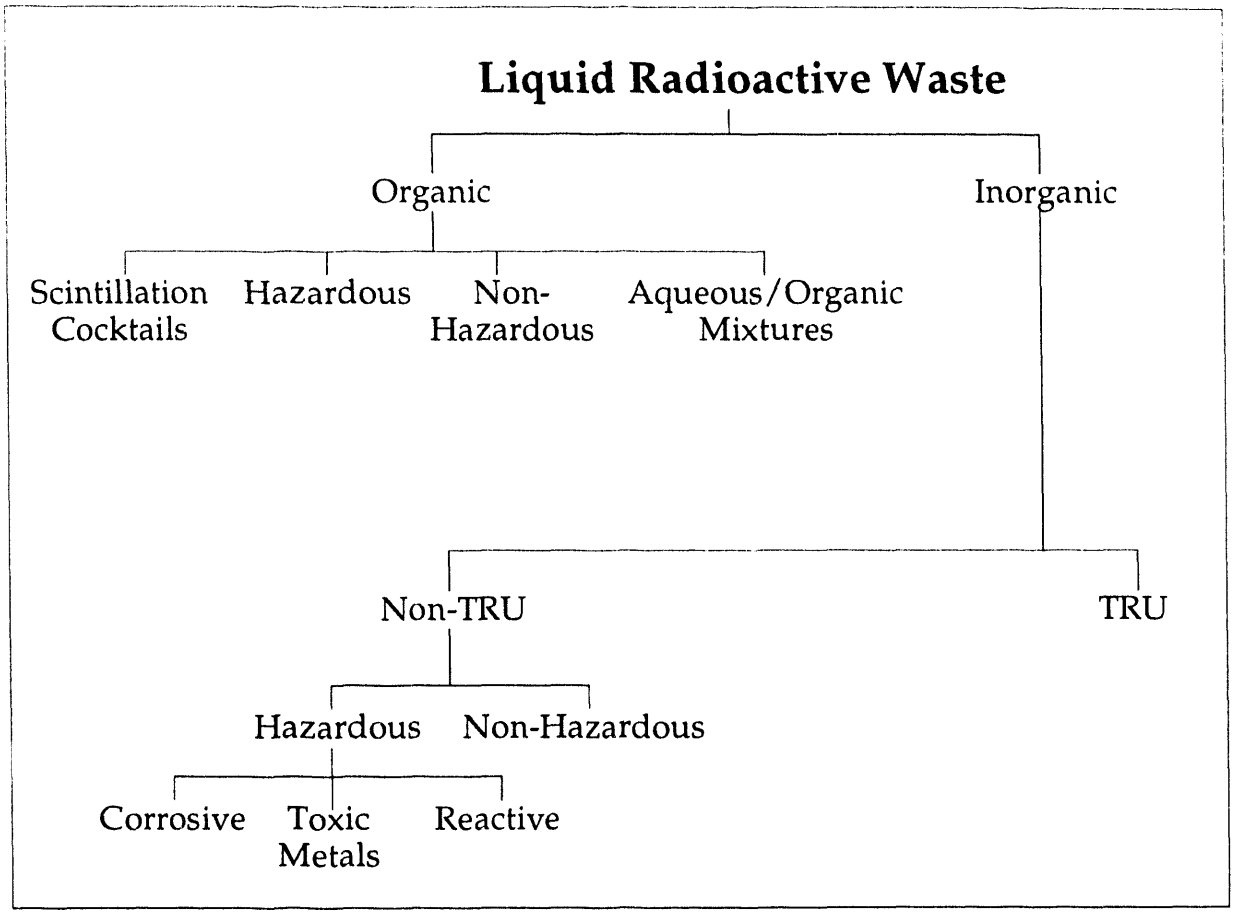

Fig. 1. Classification of Liquid Radioactive Waste

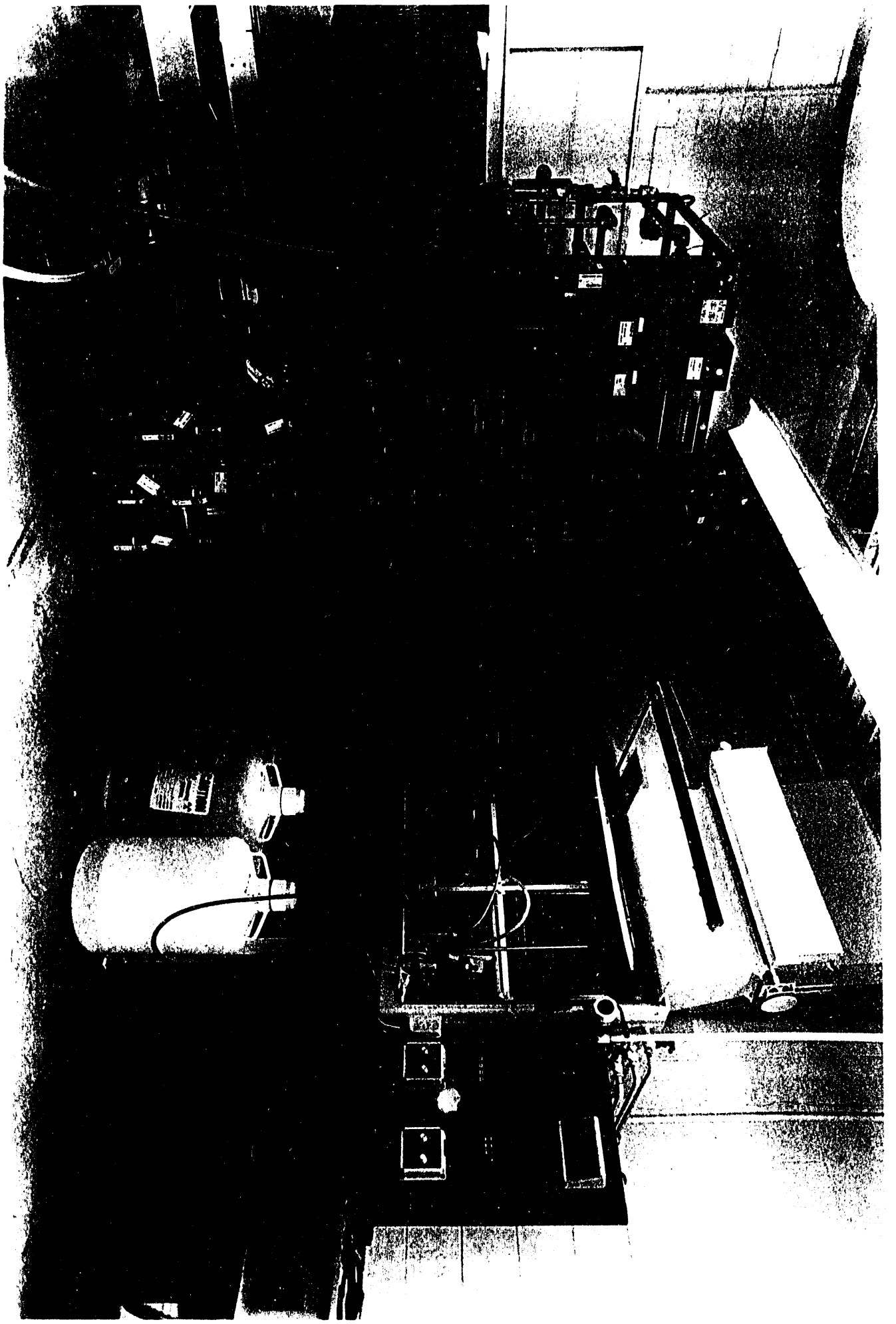

Fig 2. Photograph of Filtration (left) and Precipitation (right) Units.

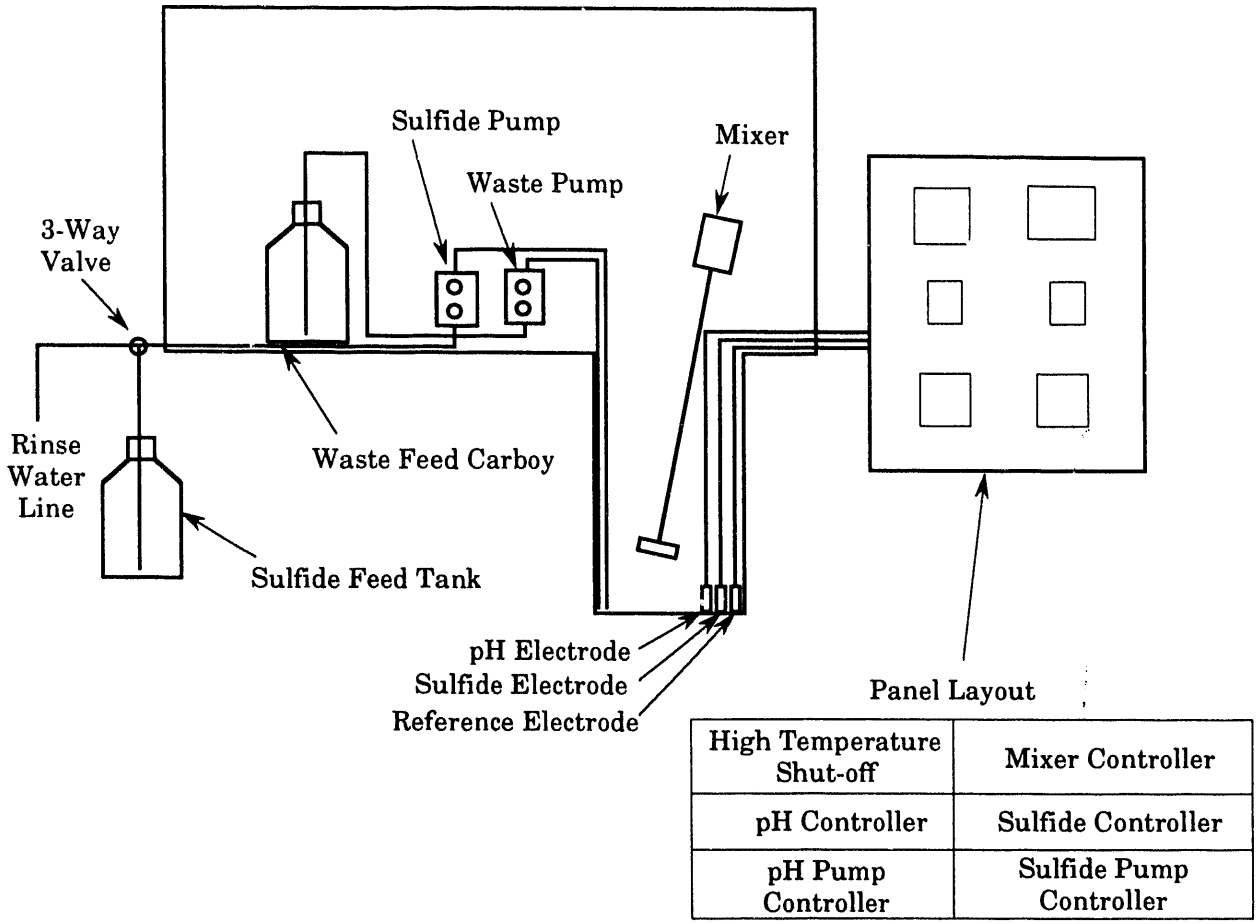

Fig. 3. Schematic of the Mixed Waste Treatment Module

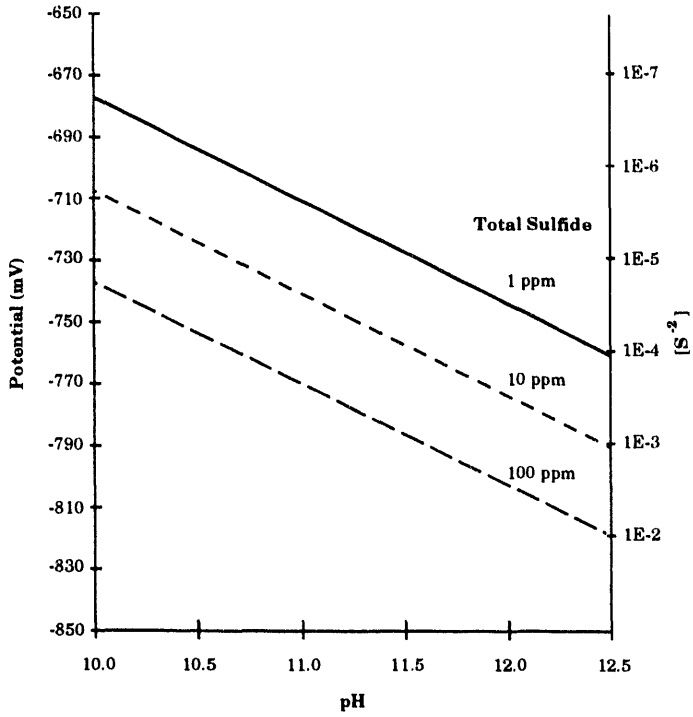

Fig. 4. Calibration of Sulfide Electrode

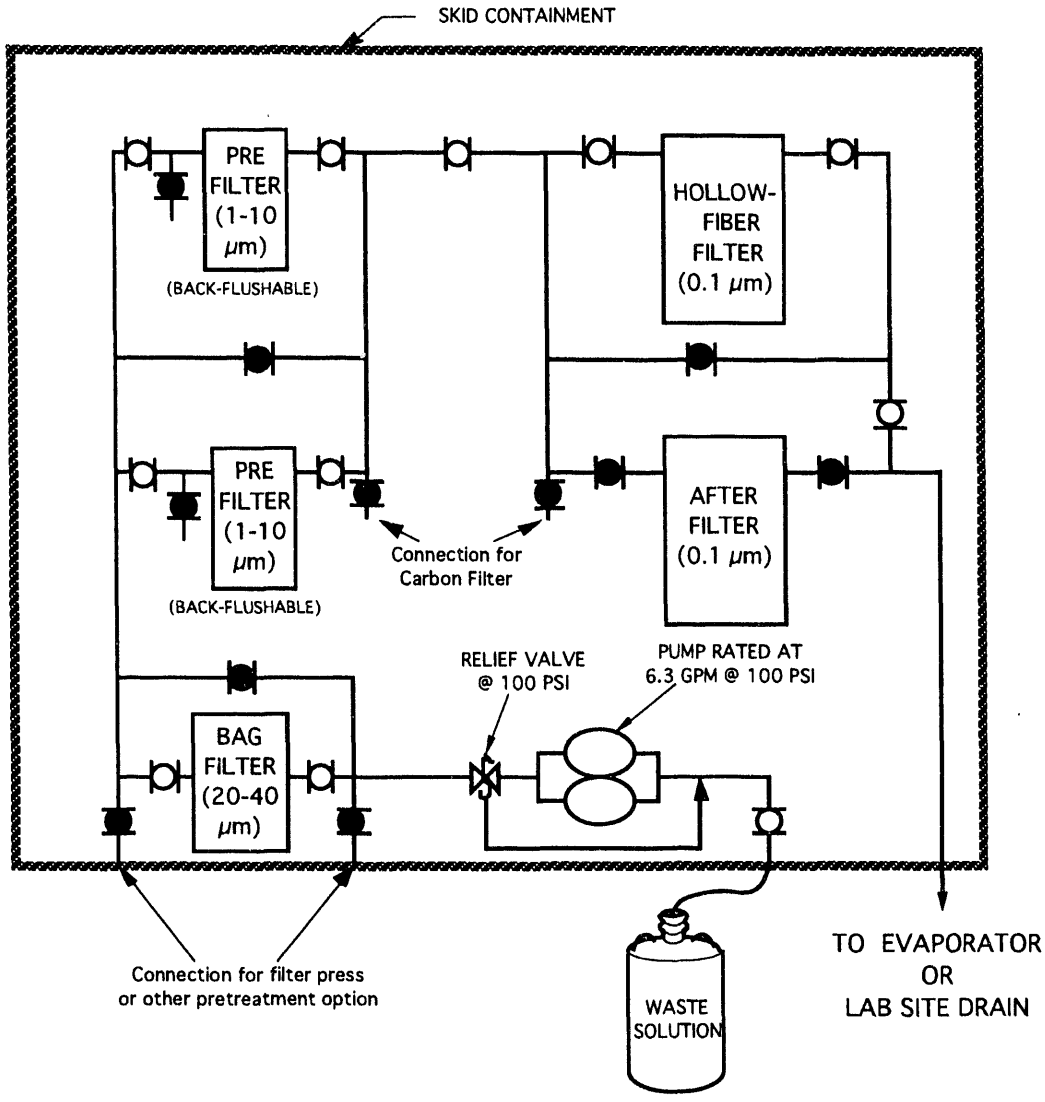

Fig. 5. Schematic of the Filtration System

DATE
FILMED
6/22/94

END