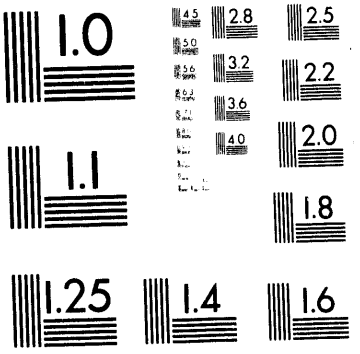
1.0
4.5
2.8
2.5
5.0
3.2
2.2
5.6
3.6
2.0
4.0
1.1
1.8
1.25
1.4
1.6

1 of 1

DOE/PC/79653--T10

DRAFT

ADVANCED COMBUSTION SYSTEM FOR INDUSTRIAL BOILERS

PHASE II

Quarterly Technical Progress Report

JANUARY-MARCH 1990

Prepared by:

Charles L. Wagoner
John P. Foote
William P. Millard
Richard C. Attig
Roy J. Schulz

University of Tennessee Space Institute
Tullahoma, Tennessee 37388

DOE Contract No. DE-AC22-87PC79653

MASTER

DISTRIBUTION OF THIS DOCUMENT IS UNLIMITED

Table of Contents

Page

1.0 INTRODUCTION 1

2.0 TECHNICAL PROGRESS DURING OCTOBER-DECEMBER 1989 9
2.1 Task 3: Integrated Combustion System Development 9
2.1.1 Coal Feed System Development 9
2.1.2 Design of Burner Modifications for NOx Reduction 22
2.2 Task 4: Project Management and Reporting 22

3.0 WORK PLANNED FOR APRIL-JUNE 1990 25

DISCLAIMER

This report was prepared as an account of work sponsored by an agency of the United States Government. Neither the United States Government nor any agency thereof, nor any of their employees, makes any warranty, express or implied, or assumes any legal liability or responsibility for the accuracy, completeness, or usefulness of any information, apparatus, product, or process disclosed, or represents that its use would not infringe privately owned rights. Reference herein to any specific commercial product, process, or service by trade name, trademark, manufacturer, or otherwise does not necessarily constitute or imply its endorsement, recommendation, or favoring by the United States Government or any agency thereof. The views and opinions of authors expressed herein do not necessarily state or reflect those of the United States Government or any agency thereof.

List of Figures

		Page
Figure 1.1	Advanced Coal Combustion System for Industrial Boilers	2
Figure 1.2	UTSI Phase I Replacement Burner	4
Figure 2.1	Water Flow vs. Vacuum for Annular Eductor, Driving Air Pressure 82 PSIG	11
Figure 2.2	Driving Air Pressure vs. Water Flow for Annular Eductor, Suction Maintained at 5 PSI	12
Figure 2.3	Boiler Efficiency vs. Firing Rate, UTSI Phase 2 Burner Performance Comparison	15
Figure 2.4	Fuel Ash Carried Through Boiler vs. Firing Rate, UTSI Phase 2 Burner Performance Comparison	16
Figure 2.5	Carbon Conversion vs. Firing Rate, UTSI Phase 2 Burner Performance Comparison	18
Figure 2.6	NOx Emissions vs. Firing Rate, UTSI Phase 2 Burner Performance Comparison	19
Figure 2.7	Total Particulate Emissions vs. Firing Rate, UTSI Phase 2 Burner Performance Comparison	21
Figure 2.8	UTSI Phase II Replacement Burner with Deep Air Staging	23

1.0 INTRODUCTION

The contract start date (for Phase I) was June 11, 1987. Contract completion date is September 11, 1991.

This is the second quarterly report covering work on Phase II of the project. The period covered is January through March, 1990.

The purpose of this project is to develop an advanced coal combustion system for industrial boilers. With the new combustion system, coal could be used to replace oil and gas as fuels for many industrial boilers.

The advanced coal combustion system concept includes the following components:

- a new burner for ultra fine coal fuels which could replace existing oil and/or gas burners
- a coal injector that could replace the oil gun in existing burners, as an alternative to complete replacement of the burner assembly
- a coal storage and dense phase coal feed system
- an automatic control system, based on computer control with feedback from low-cost combustion-quality transducers
- ash removal and particulate cleanup equipment.

The components of the advanced coal combustion system are shown schematically in Figure 1.1. Areas of contract activity are enclosed with dotted lines by the large rectangle.

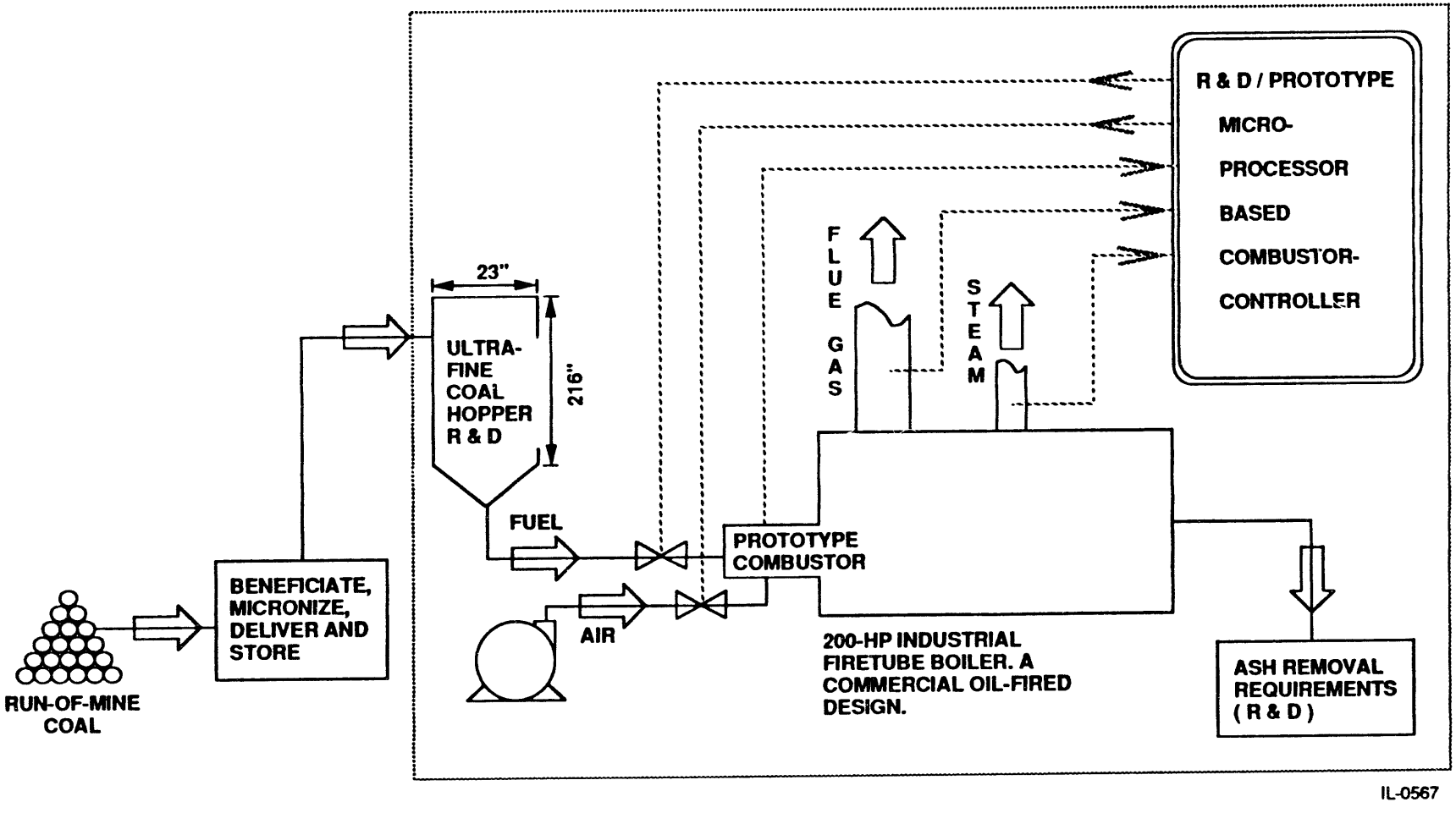

Fig. 1.1. Advanced Combustion System for Industrial Boilers

Phase I, Summary of Results

During Phase I of the project, a coal injector was designed, fabricated, and tested. It is a direct replacement for the oil gun in the original equipment of a 200 hp Cleaver-Brooks fire-tube boiler. The system was tested at coal-firing rates in the range of 2 to 6 million Btu's per hour, firing Upper Elkhorn No. 3 (eastern bituminous, "UE3") coal supplied by Energy International, Incorporated. For these tests, propane was used to preheat the boiler before initiation of coal firing. The propane flow was turned off after coal combustion was established. No combustion air preheat was used. During these tests, boiler efficiency was typically about 85 to 86 percent, while carbon conversion efficiency was approximately 94 percent. Concentrations of CO were less than 150 ppm. The NOx emissions were less than 0.6 pounds per million Btu's.

Following a series of laser-illuminated cold-flow-visualization tests, a new burner was also designed, fabricated, and tested during Phase I. The arrangement is shown in Figure 1.2. It is a two-stage, swirl burner which fits in the space previously occupied by the original Cleaver-Brooks burner, and uses the existing section of refractory. Air flow can be regulated independently into each of the two stages. Additionally, the angle is adjustable for individual swirl blades.

Upper Elkhorn No. 3 ultra fine coal was used as the standard fuel for most UTSI-burner tests. Firing rates were in the range of 2 to 6 million Btu's per hour. Upper Elkhorn No. 3 coals were tested with three levels of ash. These were approximately 1.4%, 2.7%, and 4.8% ash, on an as-fired basis. The 2.7%-ash UE3 coal was used for most tests because it exhibited a good balance between ash content and ash-fusion

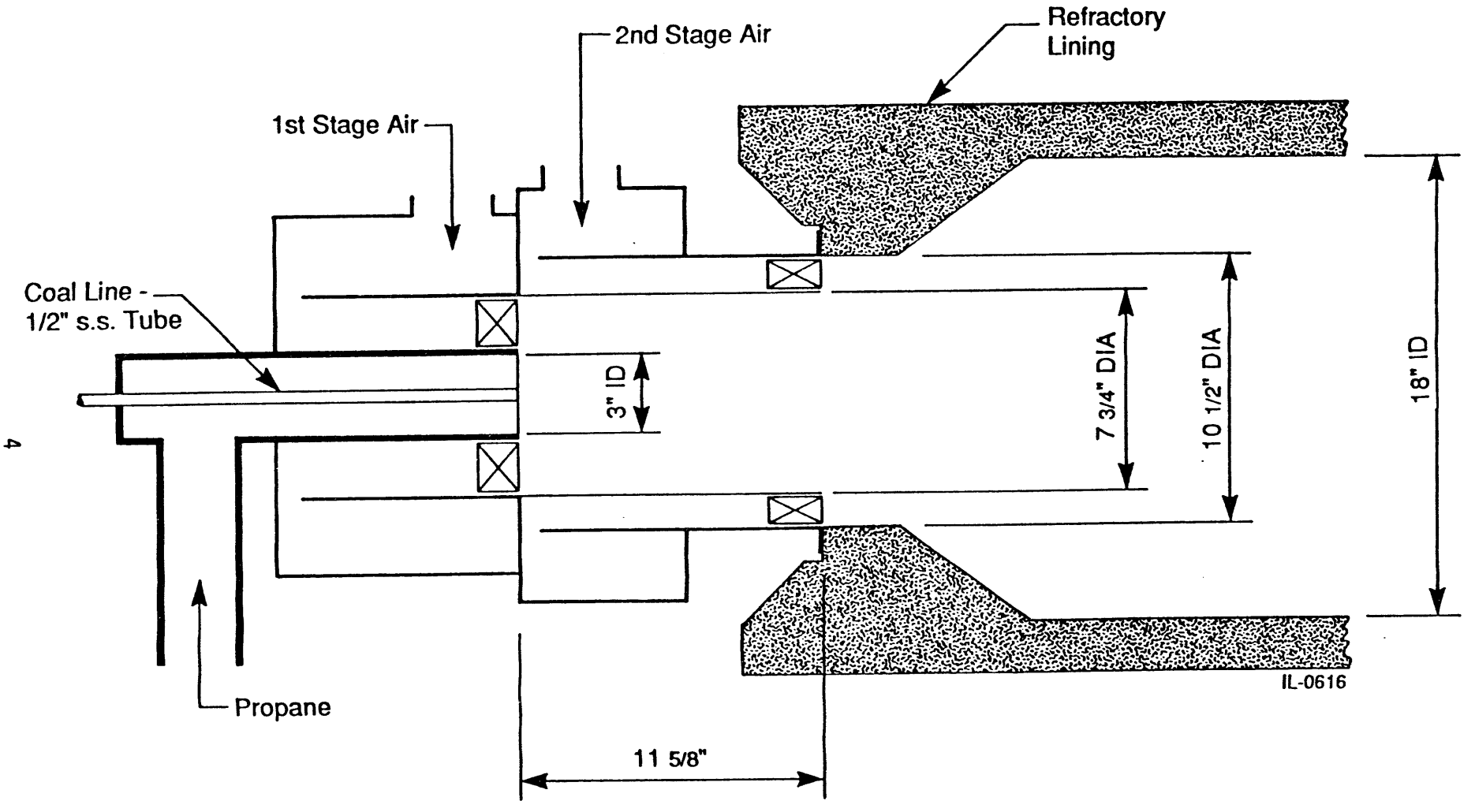

Figure 1.2. UTSI Phase I Replacement Burner

characteristics. The 2.7%-ash UE3 coal also served as a reference and established a baseline for performance. Additionally, a 1.3 float fraction of a western Eagle Butte subbituminous coal was used as the fourth ultra fine test fuel. It contained 4.4% ash on an as-fired basis.

All four test coals were supplied by Energy International, Inc. with a mean particle size of about 10 μm and a top size of 44 μm. The coals were delivered to UTSI in plastic-lined, 55-gallon steel drums.

Following the same approach as previous tests, propane was used to preheat the boiler before initiation of coal firing. The propane flow was turned off after coal combustion was established. No combustion air preheat was used with the UTSI burner. Boiler efficiency was approximately three percent higher with UE3 coal than in the previous test series, and typically was about 88 to 89 percent. Carbon conversion efficiency was approximately 97 to 99 percent for UE3 coals. A very high value of 99.9 percent carbon conversion was attained with the 4.4%-ash Eagle Butte coal. These results are about 3 to 6 percent higher than those measured when the UTSI coal injector was used in the Cleaver-Brooks burner.

Forty to sixty percent of the ASTM coal ash remained in the boiler. However, the deposits were powdery and easy to remove by increasing the fan speed after the conclusion of each combustion test. The increased air velocity quickly re-entrained and removed most of the previously-deposited ash.

Concentrations of CO were below 100 ppm. The NOx emissions ranged from 1.2 to 1.3 pounds per million Btu's with the UE3 coals. With the Eagle Butte coal, a lower level of 0.86 pounds of NOx per million Btu's was achieved.

In addition to the burner-development activities, a system was designed, fabricated, tested, and used routinely for data acquisition and manual boiler/burner control. The system is based upon a dedicated micro-computer based on the Intel "286" cpu chip architecture using UTSI-developed software. **In Phase II this system will provide automation of system control and data acquisition.**

Initiation of Phase II

Phase II started on October 1, 1989.

The main objective of the current work is to move ahead from the primarily R&D oriented approach of Phase I toward commercialization of a complete coal-retrofit system.

In order to accomplish this, our plans include the following goals and activities.

Goals

- Decrease NOx emissions to less than 0.7 lb/MBtu

  (based upon the value specified in *Performance Standards for Commercial/Industrial/Institutional Steam Generation* for coal-fired boilers in the 100 MBtu/h to 200 MBtu/h range; a level of 0.6 lb NOx/MBtu is specified for coal-fired electric utility steam generators larger than 250 MBtu/hour by the *Performance Standards for Electric*

Utility Steam Generating Units Commencing After September 18, 1978. As a supplemental goal, we will attempt to obtain this lower level of emissions with NOx less than 0.6 lb/MBtu).

- Decrease particulate emissions to less than 0.6 lb/MBtu (based upon the current *UTSI site permit* issued by the State of Tennessee; the Tennessee particulate limit is 0.8 lb/MBtu for a 6 MBtu/h boiler such as the UTSI unit).
- Increase carbon burnout so all test coals exceed 99% efficiency as a firing rate of approximately 6 MBtu/h (based upon a stated DOE goal).
- Increase the turn-down ratio from the present 3:1 capability (based upon *extension of previous achievement* of the stated DOE goal of 3:1).

Planned Activities

- Investigate the effects on reducing NOx emissions by deep-staging combustion air or reburning
- Add on-line cleaning capabilities for removal of powdery fireside deposits
- Add particulate-removal equipment to reduce stack emissions
- Develop higher efficiency three-stage burner
- Add air-preheater and evaluate effects

- Add low-cost combustion-quality transducer for automated control of boiler efficiency
- Develop simple, reliable, and inexpensive on-line dense-phase flow-control capability with storage hopper operating at atmospheric pressure and suitable for reloading with coal at any time during extended periods of operation
- Automate the boiler control system
- Evaluate potential of bulk bags for receiving, storing, and unloading ultra fine coal
- Develop a commercially acceptable ultra fine coal storage and dense-phase feed system
- Demonstrate performance of new three-stage burner
- Make an economic evaluation and develop a commercialization plan
- Demonstrate commercial feasibility of the integrated system with a 100-hour test operation

Period Covered by This Report

The second quarter (January 90 - March '90) of Phase II activities is the subject of this report.

2.0 TECHNICAL PROGRESS DURING JANUARY-MARCH 1990

2.1 Task 3: Integrated Combustion System Development

Efforts during this quarter were directed toward development of a more commercial coal feed system which utilizes an eductor to withdraw coal from an unpressurized hopper, transport it through the feed line in dense phase, and discharge it into the burner. Initial combustion testing using the new coal feed system was conducted, with very promising results. Also during this quarter, design of a modified combustor utilizing deep air staging for reduction of NOx emissions was initiated.

2.1.1 Coal Feed System Development

The coal feed system used during Phase I testing utilized a pressurized feed tank, which supplied micronized coal through a metering orifice to a dense phase feed line. For a commercial coal feed system, a large pressurized tank is not desirable. Therefore, an effort was undertaken to develop a coal feed system that would not require a large pressurized feed tank. Several possibilities were examined, including airlocks for transferring coal from an unpressurized hopper into a smaller pressurized tank and mechanical devices for injecting coal from an unpressurized hopper into a pressurized feed line. Of the various schemes considered, it was decided that the most practical system would be to use an eductor to withdraw coal from an unpressurized hopper, pull it through the dense phase feed line under vacuum, and discharge it into the burner.

Pressure measurements made during Phase I testing indicated that a pressure drop of about 4 psi is required to transport 4 to 5 lb/min of micronized coal through a twenty foot long, 3/8 inch diameter feed line in dense phase. For Upper Elkhorn No. 3

(UE3) coal, coal flow rates in the range of 2.2 to 6.6 lb/min are required for firing rates of 2 to 6 MBtu/hour. Eductors (also called ejectors or jet pumps) are capable of producing vacuums considerably greater than 4 psi; therefore, a suitably designed eductor should be capable of transporting the required amount of coal through a dense phase feed line.

A prototype annular eductor (high pressure air enters through an annulus, with the pumped material entering through a central tube) was designed based on principles of one-dimensional gas dynamics. The eductor was initially tested pumping water. Adjustments were made to provide the most efficient operation, i.e., the greatest mass of water pumped for a given suction pressure and air consumption. Water flow performance data for the final version of the annular eductor are shown in Figures 2.1 and 2.2. Air consumption at an inlet pressure of 82 psig is about 6.5 lb/min. **During subsequent testing, it was found that the eductor performance when pumping coal was similar to the water performance in terms of pumped mass flow vs. suction pressure; however, the pressure drop per unit length of feed line is much greater for dense phase coal flow than for water flow.**

Several short combustion tests were conducted using the new coal feed system in conjunction with the UTSI burner. The burner was modified so the coal mixed with the eductor driving air enters through a 1-1/2 inch pipe, rather than entering in dense phase through a 1/2 inch tube as in previous tests. During the initial tests, the same coal tank was used as during the Phase I testing. A pressure vent was left open to insure that

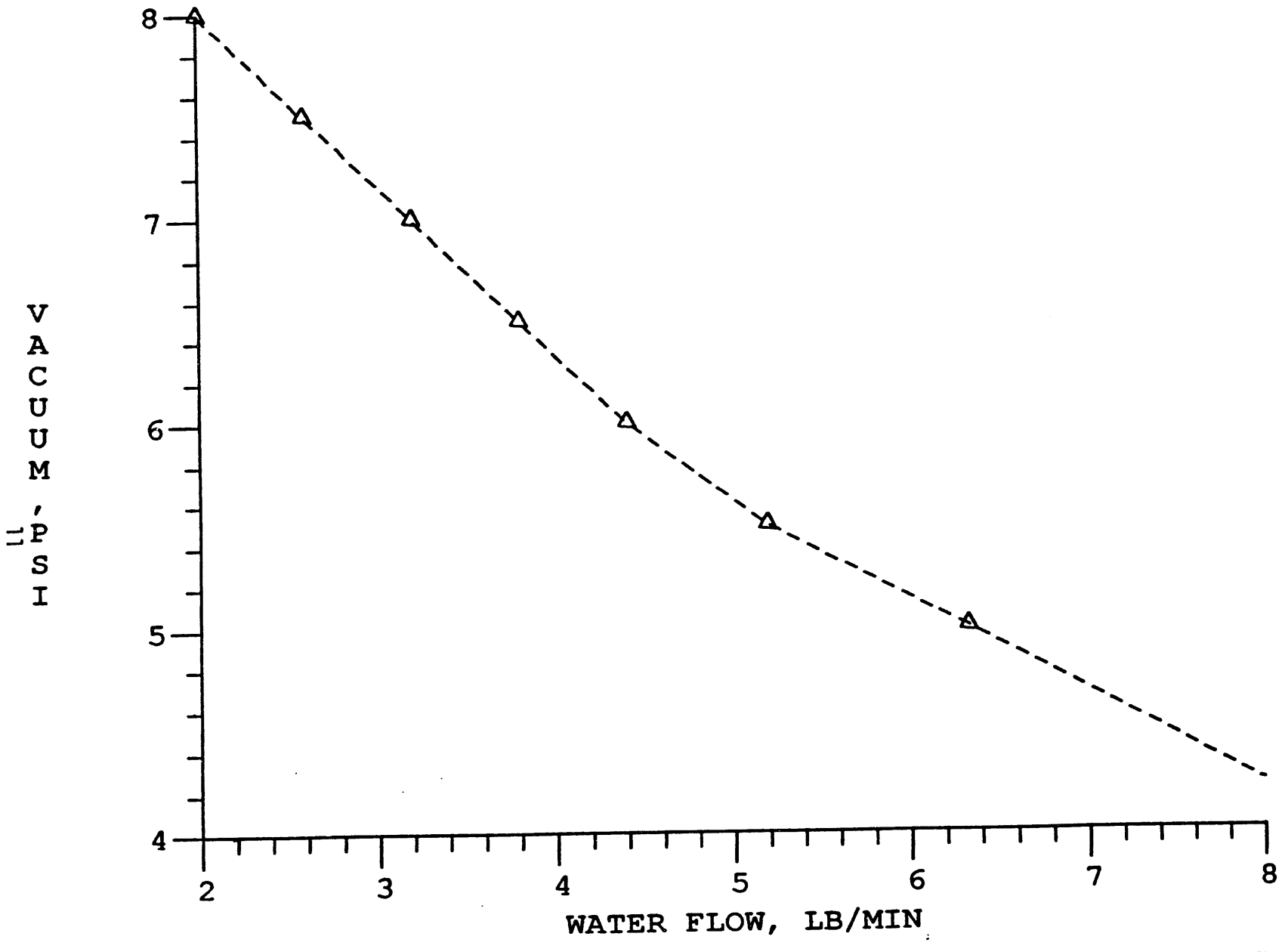

WATER FLOW VS. VACUUM FOR ANNULAR EDUCTOR, P0=82 PSIG

Figure 2.1. Water Flow vs. Vacuum for Annular Eductor, Driving Air Pressure 82 PSIG

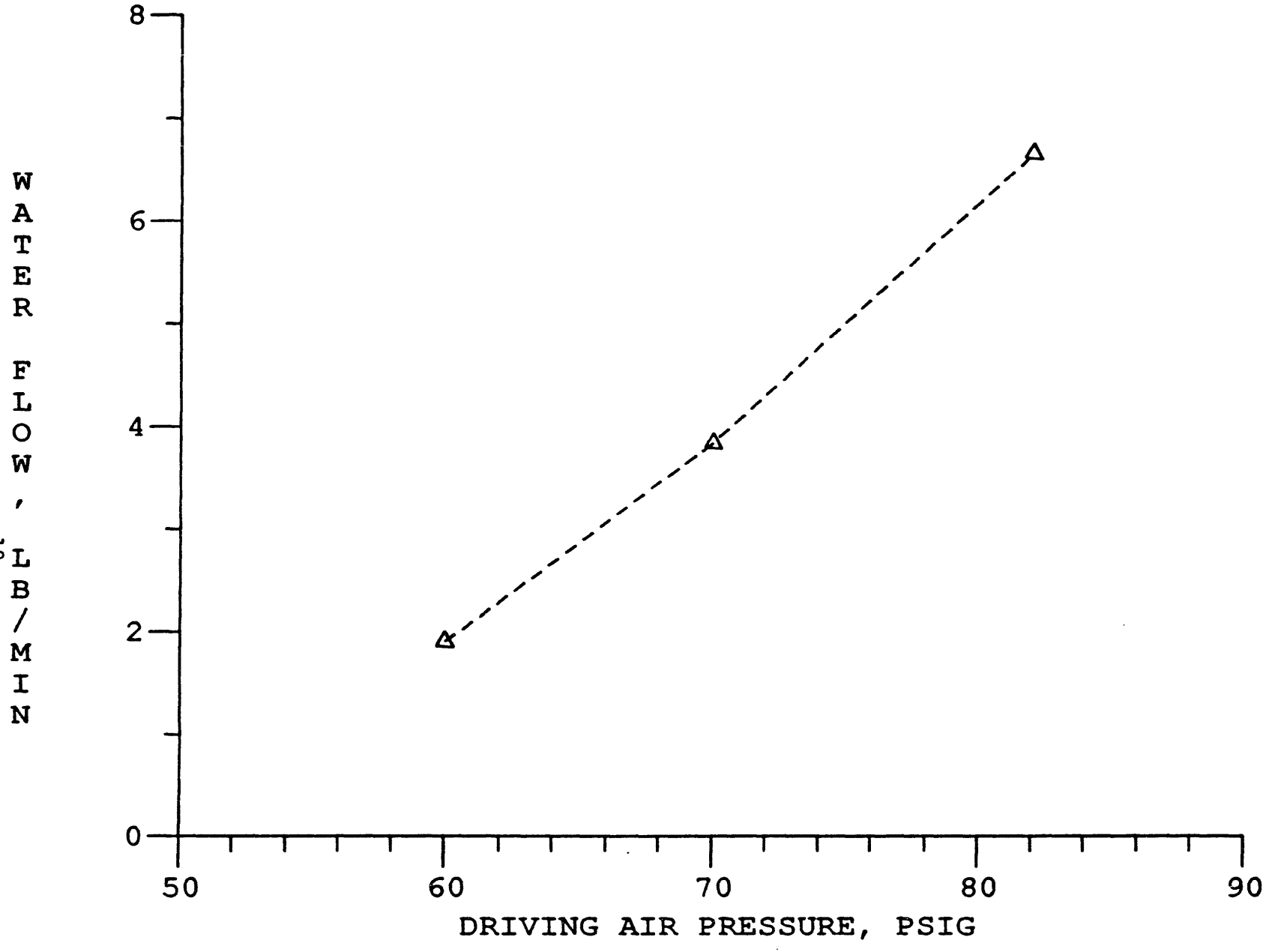

AIR PRESSURE VS. WATER FLOW. SUCTION MAINTAINED AT 5 PSI

Figure 2.2. Driving Air Pressure vs. Water Flow for Annular Eductor, Suction Maintained at 5 PSI

the tank remained at atmospheric pressure. A 1-1/2 inch diameter auger bit was installed at the inlet of the feed line to break up coal lumps. Unfortunately, the geometry of the tank exit appeared to limit the coal flow rate, and the highest flow rate that could be consistently maintained was about 4.5 lb/min (about 4 MBtu/hr using UE3 coal). A similar limitation on the coal flow rate was earlier observed during testing with the pressurized feed system. The exact cause for this phenomenon has not been determined, but it appears to be due to the coal compacting in the conical part of the tank.

Since the amount of material pumped is dependent on the momentum of the driving air, the coal flow rate can be adjusted by varying the pressure of the driving air. This is an important advantage of the eductor coal feed system, since the need for a control valve in the feed line is eliminated. Since the coal tank geometry appeared to influence the coal flow rate, a test was performed in which coal was withdrawn directly from a 55 gallon drum. During that test, it was possible to adjust the coal flow rate from less than 2 lb/min to greater than 6 lb/min by varying the driving air pressure, thus confirming that a 3-to-1 turndown ratio can be attained using the eductor coal feed system. Project plans call for construction of a large atmospheric pressure coal hopper to be used in Phase II testing. The new tank will be designed to insure that the maximum coal flow rate is not restricted by the tank discharge arrangement.

Performance data obtained during the initial combustion testing using the new coal feed system is compared with results obtained during Phase I testing in Figures 2.3 through 2.7.

In the figures, the following abbreviations are used:

CB = original Cleaver-Brooks burner, fitted with a UTSI coal injector,

P1 = Phase I UTSI replacement coal-burner,

P2 = Phase II UTSI replacement coal-burner, and

% in legend = weight % ash in as-fired coal.

Boiler efficiency vs. firing rate data for a variety of coals tested during Phase I is compared to the initial test data for the Phase II combustor in Figure 2.3. In this plot, boiler efficiency is defined as the percentage of the fuel heat input not lost as unburned carbon or as heat contained in the flue gas exiting the stack. Heat loss to the surroundings from the boiler shell and fan power input are not considered. Boiler efficiencies are calculated in this way in order to provide a basis for comparison among various fuels and burners. Efficiency based on steam production is typically 2 to 4 percent lower. The increase in efficiency for the Phase II burner as compared to the Phase I results is due to improved carbon burnout.

Figure 2.4 shows the percentage of fuel ash carried over to the stack as a function of firing rate for the various burners and coals tested. During the initial test using the Phase II burner, nearly 100 percent of the fuel ash carried over to the stack, compared to a maximum ash carryover of about 60 percent during previous testing. The most likely explanation for this result is that by introducing the coal into the burner premixed with air and at a higher velocity, the ash remains better suspended in the gas stream, agglomeration is minimized, and smaller ash particles are produced which are less likely to deposit in the boiler.

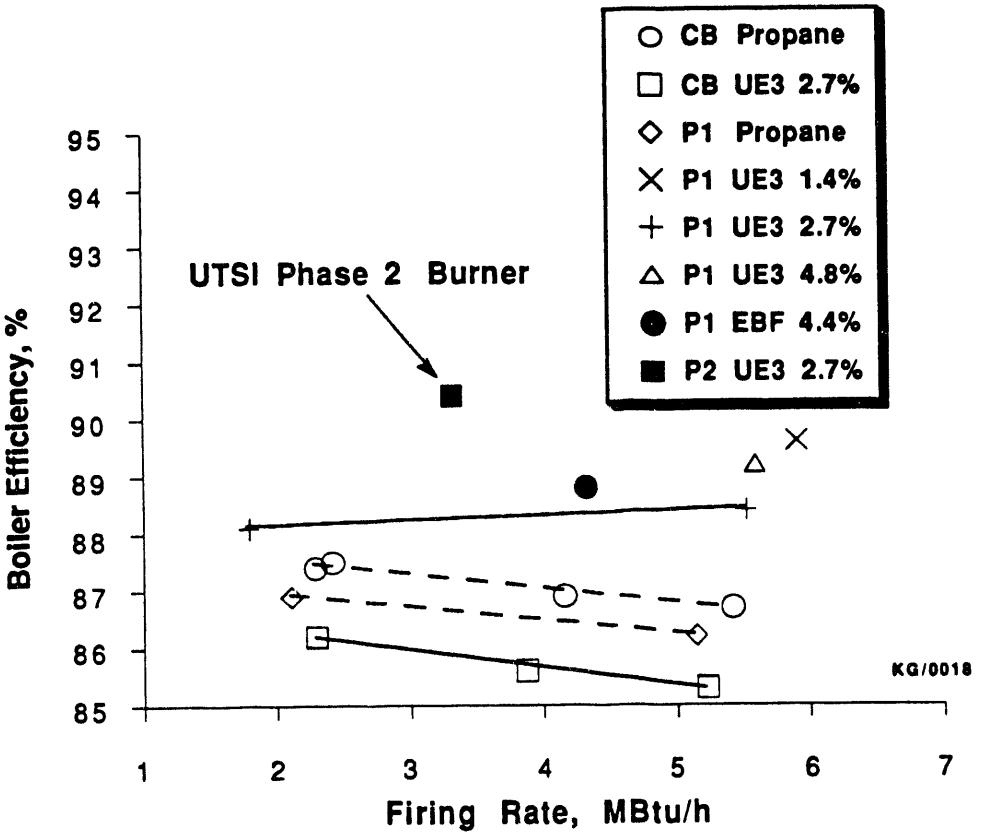

Figure 2.3. Boiler Efficiency vs. Firing Rate, UTSI Phase 2 Burner Performance Comparison

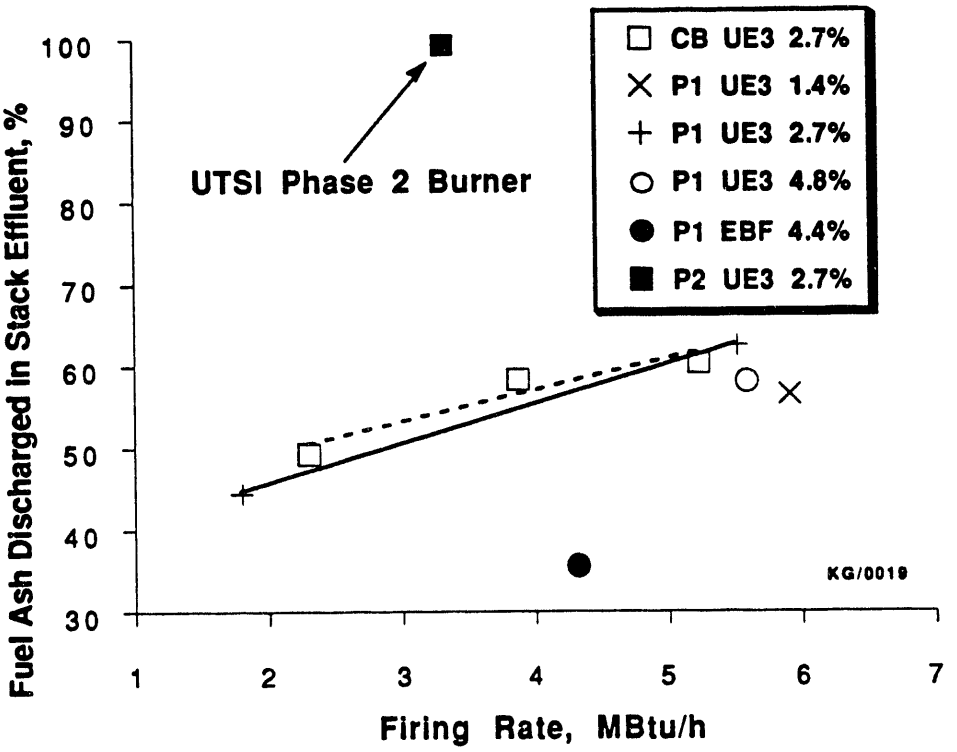

Figure 2.4. Fuel Ash Carried Through Boiler vs. Firing Rate, UTSI Phase 2 Burner Performance Comparison

Figure 2.5 shows percent carbon burnout vs. firing rate for the various burners and coals tested. A carbon burnout of 99.9 percent was achieved using the western Eagle Butte coal with the Phase I burner, probably because the western coal is more reactive than the bituminous coals. Unfortunately, the Eagle Butte coal did not appear to be suitable for long-term boiler operation due to excessive slagging. A significant improvement in carbon conversion efficiency using the 2.7 percent ash UE3 coal was obtained in the initial Phase II test, as compared to the results with the Phase I burner, due to the change in the way the coal is introduced into the burner. **The carbon burnout during the initial Phase II test was 98.9 percent, compared to about 97 percent during Phase I testing**.

Figure 2.6 shows a comparison of NOx emissions vs. firing rate for the various coals and burners tested. The original Cleaver-Brooks burner equipped with a UTSI coal injector, produces a fairly long, cool flame with NOx emissions typically below 0.6 lb/MBtu; however, carbon conversion efficiency with the Cleaver-Brooks burner was approximately 94 percent. This was caused by rapid quenching of the lengthy flame in the firetube. Emissions of NOx produced by the Phase I UTSI burner, which has a much more intense flame, were typically greater than 1.2 lb/MBtu when firing UE3 coal. (Emissions were much lower when firing the subbituminous Eagle Butte 1.3 float coal, which contained much less nitrogen: 0.4% versus 1.2% for the Upper Elkhorn Number 3 bituminous coal.) Initial Phase II results were comparable with Phase I results. During Phase II the burner will be modified to utilize deep air staging for NOx reduction. Based on extensive data on staged combustion reported in the literature, it is reasonable to expect that a 50

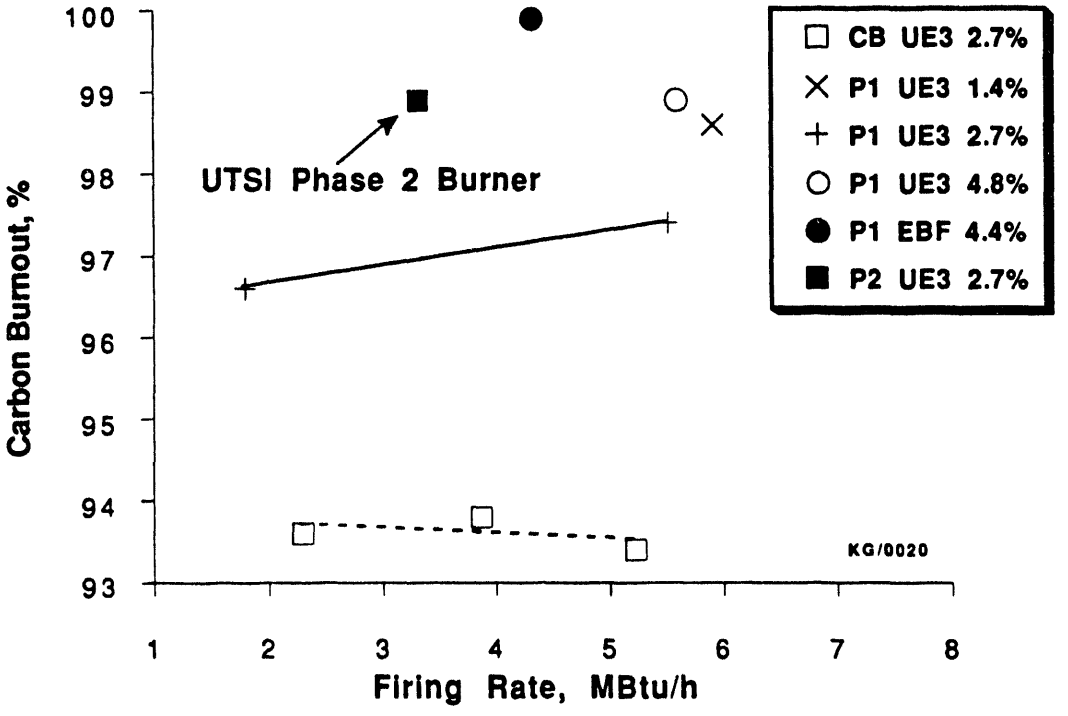

Figure 2.5. Carbon Conversion vs. Firing Rate, UTSI Phase 2 Burner Performance Comparison

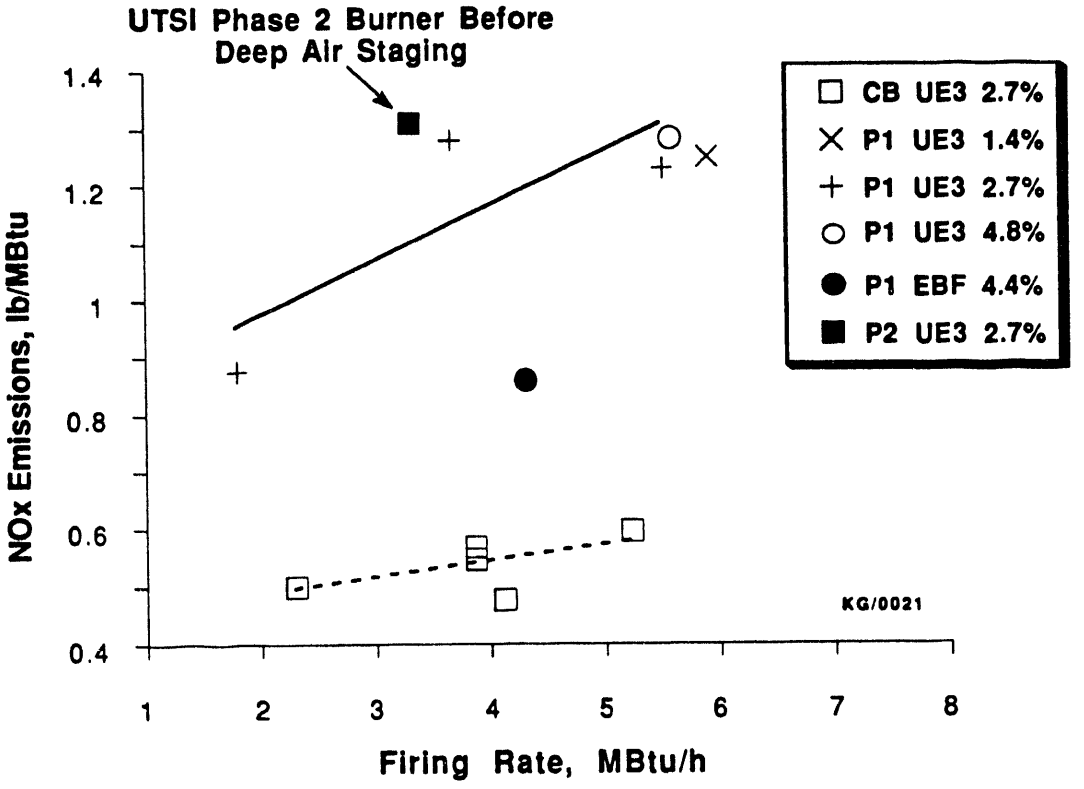

Figure 2.6. NOx Emissions vs. Firing Rate, UTSI Phase 2 Burner Performance Comparison

percent reduction in NOx emissions can be achieved by application of air staging. A 50 percent reduction would bring NOx emissions under the Phase II goal of 0.7 lb/MBtu. Plans also call for addition of natural gas reburning capability in order to reduce NOx even further. Based on reported results, a further NOx reduction of approximately 50 percent can be obtained by reburning.

Figure 2.7 shows a comparison of uncontrolled particulate emissions from the stack for the various coals and burners tested. The differences in emission rates are due to several factors, including the fuel ash content, the amount of unburned carbon, and the rate of deposition in the boiler. The Phase II burner produced somewhat higher particulate emissions from the stack than the Phase I burner firing the same coal, even though the carbon burnout was higher for the Phase II burner. The difference is due to the higher ash carryover with the Phase II burner.

Since the test results using the eductor coal feed system have been very promising, we now intend to use this system exclusively during the remainder of the Phase II activities. **The advantages of the eductor feed system, as compared to the pressurized feed system, can be summarized as follows: (1) the requirement for a pressurized feed tank is eliminated; (2) the coal flow rate can be adjusted by varying the pressure of the eductor driving air, thus eliminating the need for for a control valve in the coal feed line; and (3) the coal is introduced into the combustor premixed with the driving air and at a higher velocity, providing better combustor performance.**

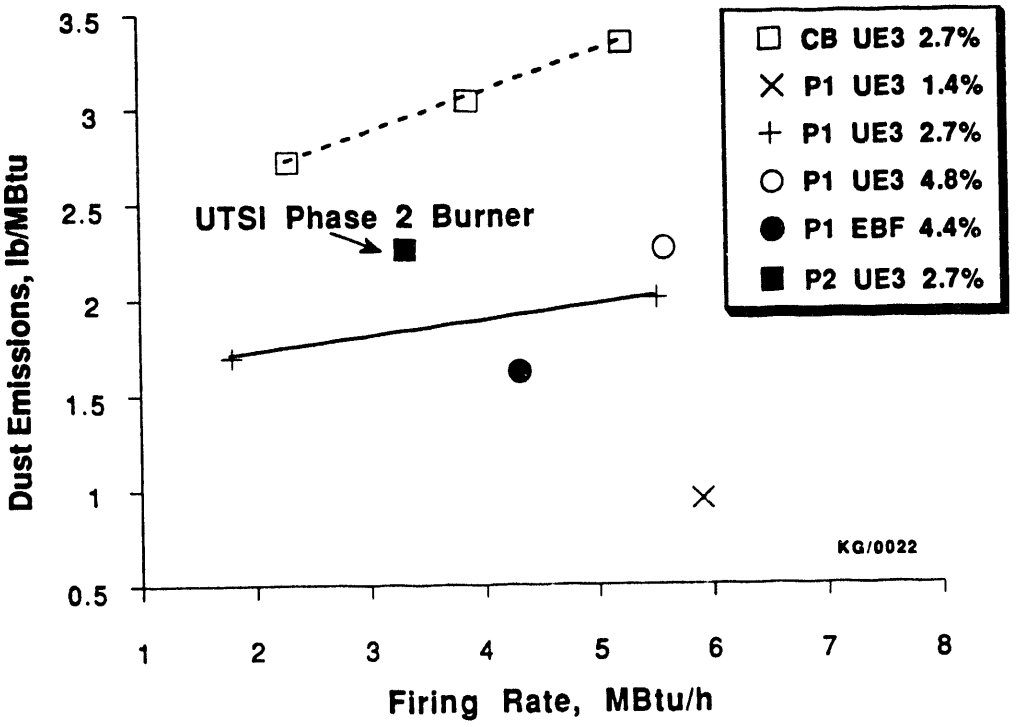

Figure 2.7. Total Particulate Emissions vs. Firing Rate, UTSI Phase 2 Burner Performance Comparison

2.1.2 Design of Burner Modifications for NOx Reduction

During this quarter, a study was undertaken to determine possible methods for reducing NOx emissions from the UTSI burner, while maintianing or improving on the carbon conversion efficiency obtained during previous testing. The NOx reduction techniques that appear most promising for application to the firetube boiler retrofit burner are combustion air staging and gas reburning. Chemical kinetics calculations indicate that if a residence time of approximately 100 ms is provided in a fuel rich combustion zone (stoichiometry about 0.8), most of the fuel bound nitrogen will react to N_2. The volume required for 100 ms residence time is approximately one-third of the firetube length. The UTSI burner will be modified to provide a large refractory-lined section in the first stage, in order to provide the necessary residence time in the fuel-rich zone. The burnout air will be added at the end of the refractory-lined section and the final combustion process will take place in the remainder of the firetube. The modified burner is shown schematically in Figure 2.8. In addition to air staging, provision will be made at a suitable location in the refractory-lined section for injection of propane for reburning.

2.2 Task 4: Project Management and Reporting

During this period, a technical paper and 35mm slides were prepared for presentation at the 15th International Conference on Coal Technologies. The paper was entitled, "Advanced Coal-Combustion System for Retrofitting Oil/Gas-Designed Industrial Boilers." Authors were C. L. Wagoner, J. P. Foote and R. C. Attig.

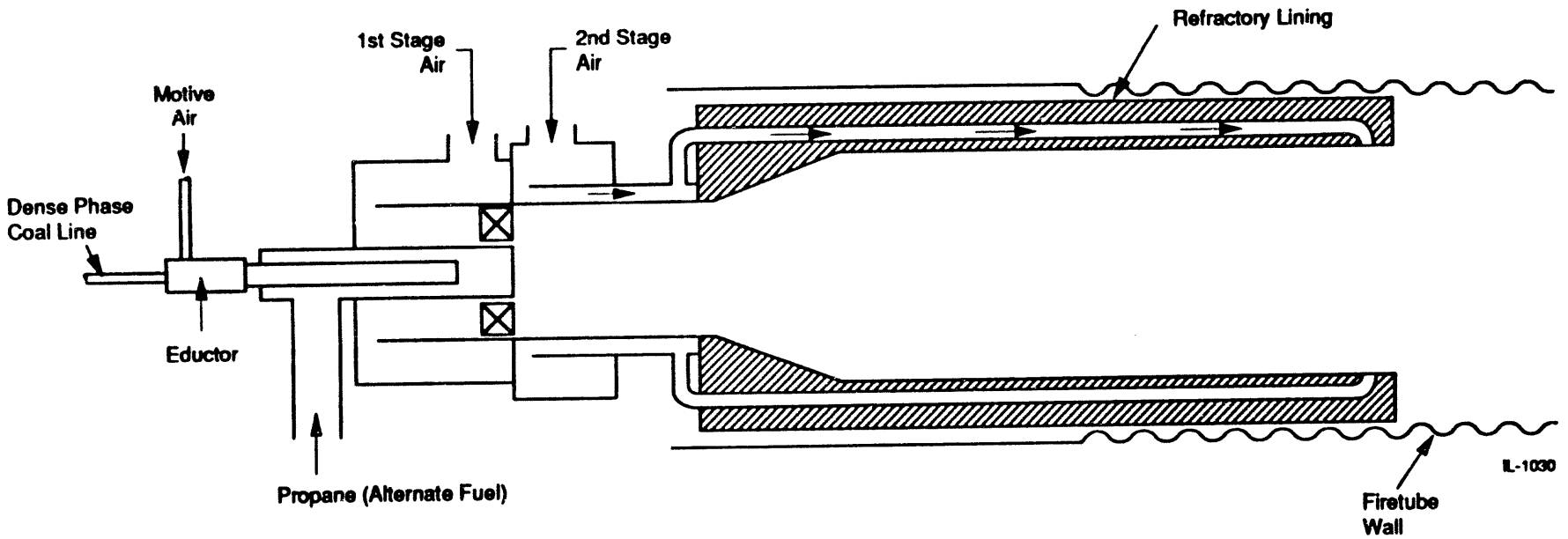

Figure 2.8. UTSI Phase II Replacement Burner with Deep Air Staging

The October 1989 - December 1989, Phase II Quarterly Technical Progress Report was issued. Work continued on preparation of the last quarterly and the final report for Phase I.

The November and December 1989, and the January and February 1990 monthly reports were issued.

3.0 WORK PLANNED FOR APRIL-JUNE 1990

During the next quarter, the design for the new coal feed system will be completed and the necessary equipment will be purchased or fabricated. The required equipment will include the storage hopper, a bin discharger, and equipment needed for loading coal into the hopper. In addition, the burner will be modified to implement deep air staging and initial combustion testing will be performed. Initial testing will be conducted with the burner installed in an outdoor test duct. Information gained from the initial tests will be used to make any needed design changes prior to testing in the boiler.

DATE
FILMED
3/10/94

END