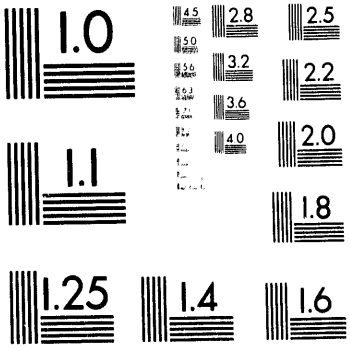
1.0
4.5
2.8
2.5
5.0
3.2
2.2
5.6
3.6
2.0
4.0
1.1
1.8
1.25
1.4
1.6

1 of 1

DOE/PC/79653--T11

DRAFT

ADVANCED COMBUSTION SYSTEM FOR INDUSTRIAL BOILERS

PHASE II

Quarterly Technical Progress Report

APRIL-JUNE 1990

Prepared by:

Charles L. Wagoner
John P. Foote
William P. Millard
Richard C. Attig
Roy J. Schulz

University of Tennessee Space Institute
Tullahoma, Tennessee 37388

DOE Contract No. DE-AC22-87PC79653

MASTER

DISTRIBUTION OF THIS DOCUMENT IS UNLIMITED

Table of Contents

Page

1.0 INTRODUCTION 1
- 1.1 Phase I, Summary of Results 3
- 1.2 Initiation of Phase II 6
- 1.3 Phase II, Summary of Results (October 1989 - March 1990) 8

2.0 TECHNICAL PROGRESS IN PHASE II DURING APRIL-JUNE 1990 10
- 2.1 Task 3: Integrated Combustion System Development 10
  - 2.1.1 Test of Automotive ZrO_2 Oxygen Sensor 10
  - 2.1.2 Procurement of Equipment for Coal Feed System 10
  - 2.1.3 Low-NOx Burner Design, Fabrication, and Testing 11
- 2.2 Task 4: Project Management and Reporting 13

3.0 WORK PLANNED FOR JULY-SEPTEMBER 1990 15

DISCLAIMER

This report was prepared as an account of work sponsored by an agency of the United States Government. Neither the United States Government nor any agency thereof, nor any of their employees, makes any warranty, express or implied, or assumes any legal liability or responsibility for the accuracy, completeness, or usefulness of any information, apparatus, product, or process disclosed, or represents that its use would not infringe privately owned rights. Reference herein to any specific commercial product, process, or service by trade name, trademark, manufacturer, or otherwise does not necessarily constitute or imply its endorsement, recommendation, or favoring by the United States Government or any agency thereof. The views and opinions of authors expressed herein do not necessarily state or reflect those of the United States Government or any agency thereof.

List of Figures

		Page
Figure 1.1	Advanced Coal Combustion System for Industrial Boilers	2
Figure 1.2	UTSI Phase I Replacement Burner	4
Figure 2.1	UTSI Phase II Replacement Burner with Deep Air Staging	12
Figure 2.2	NOx Emissions vs. Firing Rate, UTSI Phase II Burner Performance Comparison	14

1.0 INTRODUCTION

The contract start date (for Phase I) was June 11, 1987. Contract completion date is September 11, 1991.

This is the third quarterly report covering work on Phase II of the project. The period covered is April through June, 1990.

The purpose of this project is to develop an advanced coal combustion system for industrial boilers. With the new combustion system, coal could be used to replace oil and gas as fuels for many industrial boilers.

The advanced coal combustion system concept includes the following components:

- a new burner for ultra-fine coal fuels which could replace existing oil and/or gas burners
- a coal injector that could replace the oil gun in existing burners, as an alternative to complete replacement of the burner assembly
- a coal storage and dense phase coal feed system
- an automatic control system, based on computer control with feedback from low-cost combustion-quality transducers
- ash removal and particulate cleanup equipment.

The components of the advanced coal combustion system are shown schematically in Figure 1.1. Areas of contract activity are enclosed with dotted lines by the large rectangle.

PHASE 1: Design & Evaluate R & D/Prototype Equipment

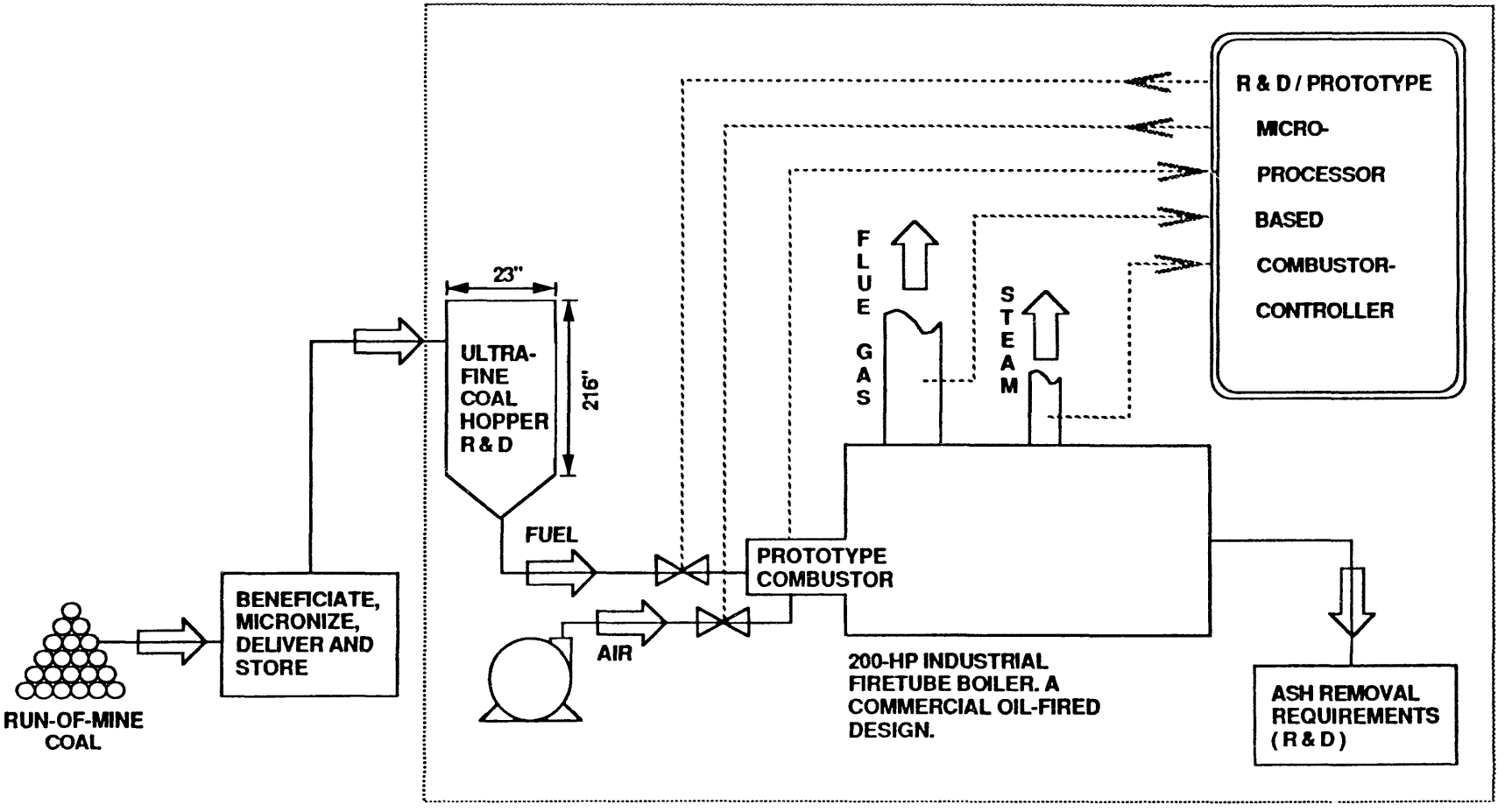

Advanced Combustion System for Industrial Boilers: 6 Million Btu/h

FIGURE 1.1.

1.1 Phase I, Summary of Results

During Phase I of the project, a coal injector was designed, fabricated, and tested. It is a direct replacement for the oil gun in the original equipment of a 200 hp Cleaver-Brooks fire-tube boiler. The system was tested at coal-firing rates in the range of 2 to 6 million Btu's per hour, firing Upper Elkhorn No. 3 (eastern bituminous, "UE3") coal supplied by Energy International, Incorporated. For these tests, propane was used to preheat the boiler before initiation of coal firing. The propane flow was turned off after coal combustion was established. No combustion air preheat was used. During these tests, boiler efficiency was typically about 85 to 86 percent, while carbon conversion efficiency was approximately 94 percent. Concentrations of CO were less than 150 ppm. The NOx emissions were less than 0.6 pounds per million Btu's.

Following a series of laser-illuminated cold-flow-visualization tests, a new burner was also designed, fabricated, and tested during Phase I. The arrangement is shown in Figure 1.2. It is a two-stage, swirl burner which fits in the space previously occupied by the original Cleaver-Brooks burner, and uses the existing section of refractory. Air flow can be regulated independently into each of the two stages. Additionally, the angle is adjustable for individual swirl blades.

Upper Elkhorn No. 3 ultra fine coal was used as the standard fuel for most UTSI-burner tests. Firing rates were in the range of 2 to 6 million Btu's per hour. Upper Elkhorn No. 3 coals were tested with three levels of ash. These were approximately 1.4%, 2.7%, and 4.8% ash, on an as-fired basis. The 2.7%-ash UE3 coal was used for most tests because it exhibited a good balance between ash content and ash-fusion

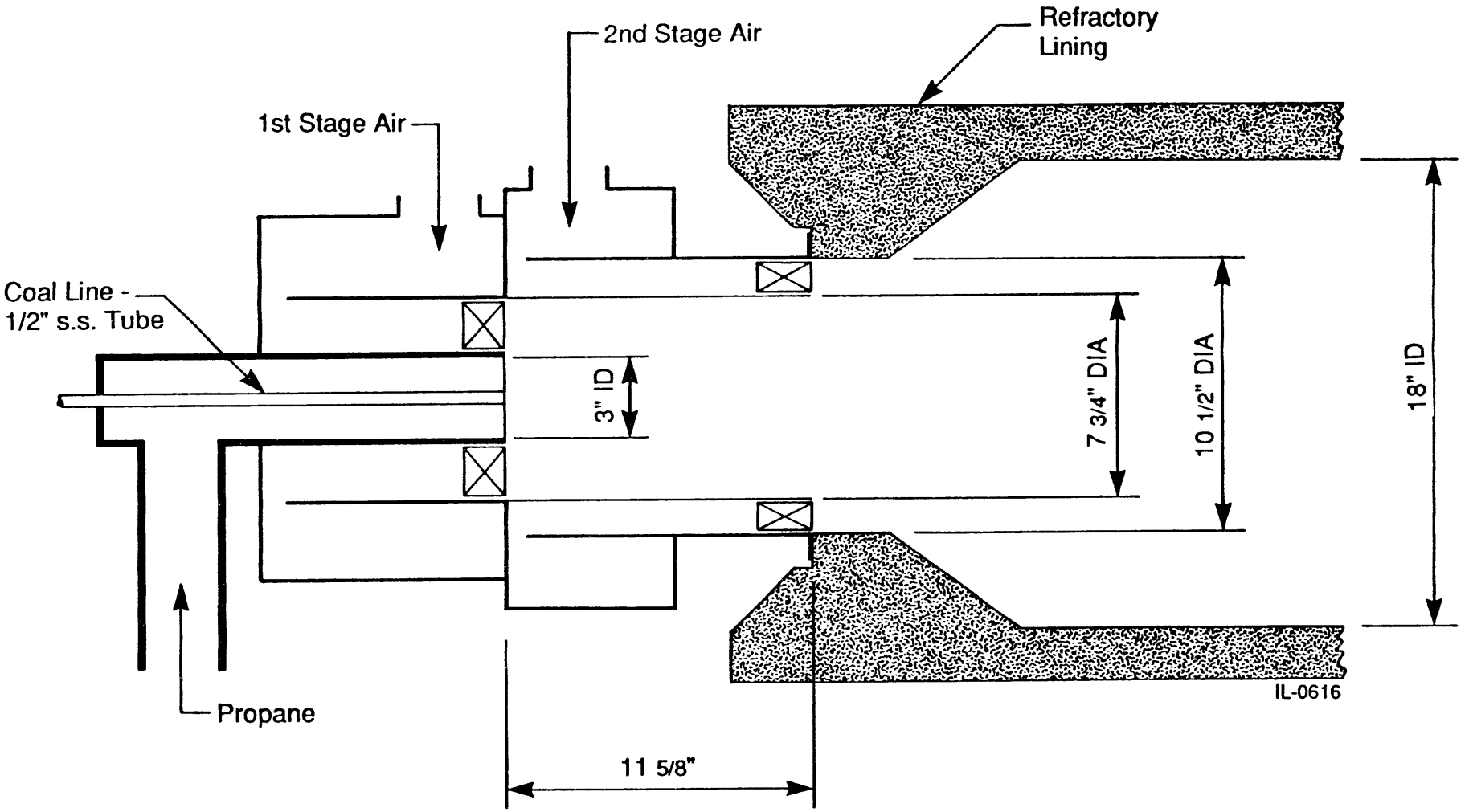

Figure 1.2. UTSI Phase I Replacement Burner

characteristics. The 2.7%-ash UE3 coal also served as a reference and established a baseline for performance. Additionally, a 1.3 float fraction of a western Eagle Butte subbituminous coal was used as the fourth ultra fine test fuel. It contained 4.4% ash on an as-fired basis.

All four test coals were supplied by Energy International, Inc. with a mean particle size of about 10 μm and a top size of 44 μm. The coals were delivered to UTSI in plastic-lined, 55-gallon steel drums.

Following the same approach as previous tests, propane was used to preheat the boiler before initiation of coal firing. The propane flow was turned off after coal combustion was established. No combustion air preheat was used with the UTSI burner. Boiler efficiency was approximately three percent higher with UE3 coal than in the previous test series, and typically was about 88 to 89 percent. Carbon conversion efficiency was approximately 97 to 99 percent for UE3 coals. A very high value of 99.9 percent carbon conversion was attained with the 4.4%-ash Eagle Butte coal. These results are about 3 to 6 percent higher than those measured when the UTSI coal injector was used in the Cleaver-Brooks burner.

Forty to sixty percent of the ASTM coal ash remained in the boiler. However, the deposits were powdery and easy to remove by increasing the fan speed after the conclusion of each combustion test. The increased air velocity quickly re-entrained and removed most of the previously-deposited ash.

Concentrations of CO were below 100 ppm. The NOx emissions ranged from 1.2 to 1.3 pounds per million Btu's with the UE3 coals. With the Eagle Butte coal, a lower level of 0.86 pounds of NOx per million Btu's was achieved.

In addition to the burner-development activities, a system was designed, fabricated, tested, and used routinely for data acquisition and manual boiler/burner control. The system is based upon a dedicated micro-computer based on the Intel "286" cpu chip architecture using UTSI-developed software. **In Phase II this system will provide automation of system control and data acquisition.**

1.2 Initiation of Phase II

Phase II started on October 1, 1989.

The main objective of the current work is to move ahead from the primarily R&D oriented approach of Phase I toward commercialization of a complete coal-retrofit system.

In order to accomplish this, our plans include the following goals and activities.

Goals

- Decrease NOx emissions to less than 0.7 lb/MBtu

  (although the UTSI commercial fire-tube boiler is fired at 6 MBtu/hour and therefore is much smaller than steam generators usually subjected to NOx regulations, we have based our goal upon the value specified in *Performance Standards for Commercial/Industrial/Institutional Steam Generation* for coal-fired boilers in the 100 MBtu/h to 200 MBtu/h range; a level of 0.6 lb NOx/MBtu is specified for coal-fired electric utility steam generators larger

than 250 MBtu/hour by the *Performance Standards for Electric Utility Steam Generating Units Commencing After September 18, 1978.* As a supplemental goal, we will attempt to obtain this lower level of emissions with NOx less than 0.6 lb/MBtu).

- Decrease particulate emissions to less than 0.6 lb/MBtu
  (based upon the current *UTSI site permit* issued by the State of Tennessee; the Tennessee particulate limit is 0.8 lb/MBtu for a 6 MBtu/h boiler such as the UTSI unit).
- Increase carbon burnout so all test coals exceed 99% efficiency as a firing rate of approximately 6 MBtu/h
  (based upon a *stated DOE goal*).
- Increase the turn-down ratio from the present 3:1 capability
  (based upon *extension of previous achievement* of the stated DOE goal of 3:1).

Planned Activities

- Investigate the effects on reducing NOx emissions by deep-staging combustion air or reburning
- Add on-line cleaning capabilities for removal of powdery fireside deposits
- Add particulate-removal equipment to reduce stack emissions
- Develop higher efficiency three-stage burner
- Add air-preheater and evaluate effects

- Add low-cost combustion-quality transducer for automated control of boiler efficiency
- Develop simple, reliable, and inexpensive on-line dense-phase flow-control capability with storage hopper operating at atmospheric pressure and suitable for reloading with coal at any time during extended periods of operation
- Automate the boiler control system
- Evaluate potential of bulk bags for receiving, storing, and unloading ultra fine coal
- Develop a commercially acceptable ultra fine coal storage and dense-phase feed system
- Demonstrate performance of new three-stage burner
- Make an economic evaluation and develop a commercialization plan
- Demonstrate commercial feasibility of the integrated system with a 100-hour test operation

1.3 Phase II, Summary of Results (October 1989 - March 1990)

Initial work in Phase II concentrated on adapting a commercially available automotive oxygen sensor for use in the boiler control system, developing a more commercially oriented dense-phase coal transport system, designing, fabricating and testing an improved burner for better combustion efficiency, and adding deep-air-staging capabilities to the new burner to decrease NOx emissions.

Highlights of the results include:

- A ZrO_2 oxygen sensor was calibrated successfully over the concentration range from 0 to 21 percent O_2 at temperatures from ambient to 400°F. **This inexpensive automotive sensor provides a signal which will be used to monitor and automatically control combustion conditions to maintain consistently high combustion efficiency combined with low NOx emissions.**
- An improved burner was designed and fabricated with an initial "stage" which functions as a coal-eductor/coal-air mixer. Now coal can be transported in dense phase to the burner without pressurizing the coal-storage hopper which had approximately a four-hour capacity. **This permits refilling the hopper during periods of continuous operation of the boiler as required for commercial use.**
- The improved burner produced the highest boiler efficiency to date. Carbon burnout improved to 98.9 percent, compared to about 97 percent during Phase I testing for the same Upper Elkhorn #3 coal with 2.7% ash. **We expect to exceed 99% combustion efficiency with all of the test coals during more optimized future testing.**
- Although the new burner proved to be very efficient, emissions of NOx were higher than those observed during Phase I testing. The new-burner design was modified. **Capability for deep air-staging was added to the new burner to promote low-NOx operation.**

2.0 TECHNICAL PROGRESS IN PHASE II DURING APRIL-JUNE 1990

The third quarter (April '90 - June '90) of Phase II activities is the subject of this report.

2.1 Task 3: Integrated Combustion System Development

During this period, work focused on using a low-cost combustion-quality transducer for real-time control of boiler efficiency, improving the coal-feed system for continuous operation of the boiler, and fabricating and testing a UTSI design of an improved deep-staged, low-NOx combustor.

2.1.1 Test of Automotive ZrO_2 Oxygen Sensor

An automotive ZrO_2 oxygen sensor was mounted in the boiler stack and used to measure oxygen concentration in the flue gas during a combustion test. The oxygen sensor has an internal heater element which is used to maintain the sensor at the correct temperature. A porous ceramic filter was used to protect the sensor from contamination by fly ash. The automotive sensor output agreed closely with the steady state oxygen concentration as measured by a calibrated fuel cell type oxygen analyzer; however, the response time of the ZrO_2 sensor was very slow, apparently because the ceramic filter retarded the gas flow over the sensor. An effort will be made to develop a sensor arrangement that will provide faster response when testing in the boiler resumes.

2.1.2 Procurement of Equipment for Coal Feed System

An atmospheric pressure coal storage hopper with storage capacity for about 5000 lbs of micronized coal (about 12 hours at a firing rate of 6 MBtu/hour) was designed and fabricated. A commercial gyrating bin discharger was purchased. Additional equipment

needed for the coal feed system, including load cells for the tank and a hoist for loading coal into the tank, will be purchased during the next quarter.

2.1.3 Low-NOx Burner Design, Fabrication, and Testing

A new burner was designed employing deep air staging in an effort to reduce NOx emissions. The new burner, shown schematically in Figure 2.1, has a large insulated section which provides for an initial combustion zone under reducing conditions. Secondary air passes through an annular passage behind the insulation and is added at the end of the insulated section. The volume of the insulated section is sufficient to provide a residence time of about 0.1 s in the reducing zone at the maximum firing rate. Chemical kinetics calculations indicate that about 0.1 s under reducing conditions is sufficient for most fuel bound nitrogen to react to N_2.

A prototype combustor was fabricated and tested in a 15-ft long test duct which simulates the boiler fire-tube. The test duct is cooled by an external water spray and exhausts to the atmosphere. Testing in the test duct makes observation of the flame easier, and also makes the burner more accessible for modification. The possibility of damaging the boiler in case of a detonation or filling it with unburned coal is also eliminated. A stainless steel probe was used to collect gas samples at the end of the test duct. An initial test was performed in the test duct with a burner configuration identical to a configuration previously tested in the boiler. NOx concentrations measured at the test duct exit were very similar to the concentrations previously measured at the boiler stack, so it was determined that test duct results are representative of NOx production to be expected in the boiler.

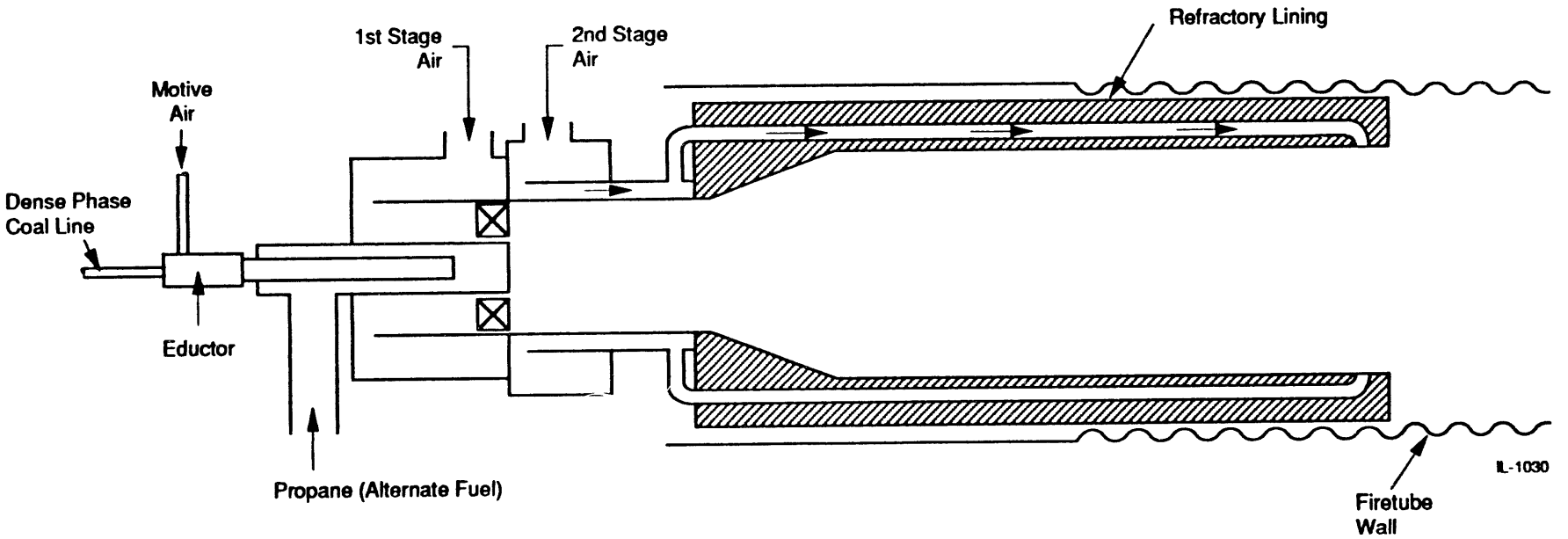

UTSI Phase II Replacement Burner with Deep Air Staging

Figure 2.1.

The prototype combustor was initially tested firing Upper Elkhorn No. 3 coal containing about 2.7 percent ash, at a firing rate of about 3.8 MBtu/hour. NOx emission during this test averaged about 0.84 lb/MBtu, as compared with an emission rate of over 1.3 lb/MBtu for the Phase I burner at a similar firing rate (see Figure 2.2). (In this figure the following explains the legend: CB = original Cleaver-Brooks burner fitted with a UTSI coal injector; PI = Phase I UTSI replacement coal-burner; P2 = Phase II UTSI replacement coal-burner; UE3 = Upper Elkhorn #3 coal; EBF = cleaned Eagle Butte coal; and % = weight percent ash in as-fired coal). During post-test inspection, it was found that some of the ceramic fiber insulation used to insulate the new combustor section had failed, presumably due to attack by the coal slag. As a result, air leaks had formed in the combustion chamber, causing some of the secondary air to be introduced prematurely. This explains why the observed reduction in NOx emission due to staging was only about 35 percent, as compared to reductions of greater than 50 percent reported in the literature. **We believe that a reduction in NOx emission sufficient to meet the statement-of-work and project goals of ≤ 0.7 (and ≤ 0.6) lb/MBtu will be achieved using combustion air staging**. The burner will be repaired and the ceramic fiber insulation will be replaced with a heavy castable refractory which should be much more resistant to slag attack. Testing of the combustor will continue during the next quarter.

2.2 Task 4: Project Management and Reporting

The final report for Phase I was issued. Work started on the January - March 1990 Quarterly Technical Progress Report.

The March, April, and May 1990 monthly reports were issued.

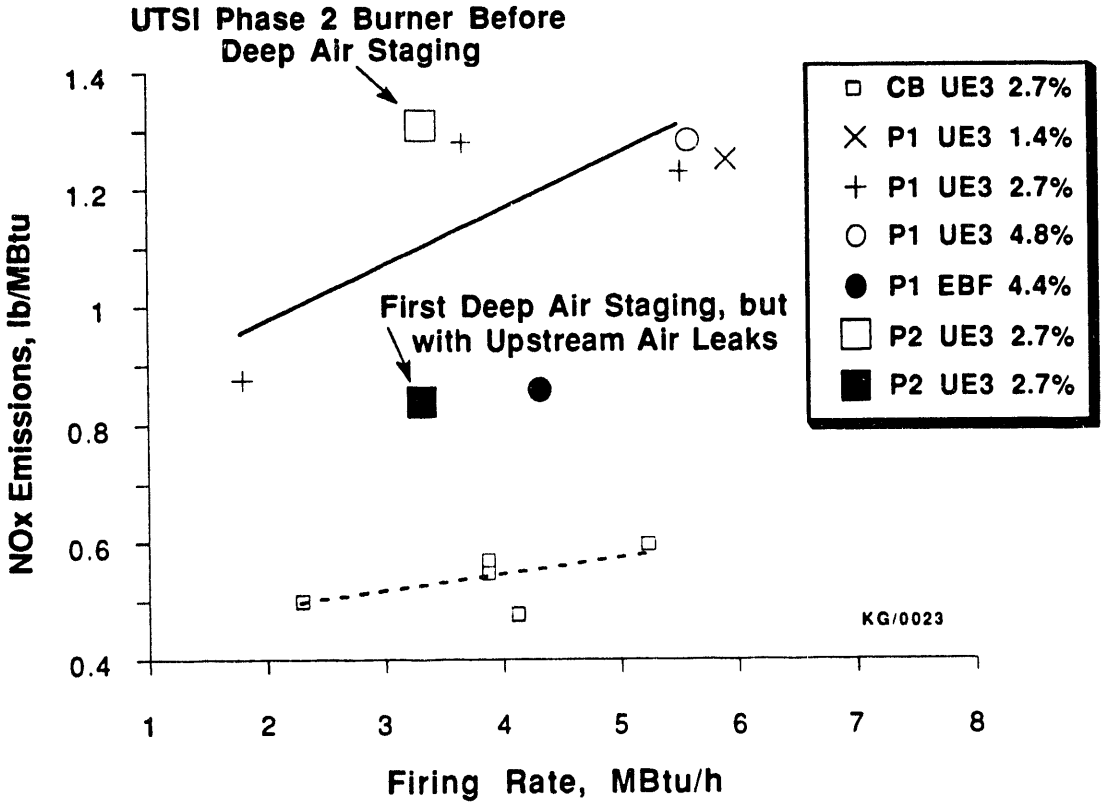

Figure 2.2. NOx Emissions vs. Firing Rate, UTSI Phase II Burner Performance Comparison

3.0 WORK PLANNED FOR JULY-SEPTEMBER 1990

During the next quarter, work will continue on development of a low-NOx coal combustor for the boiler system. Work also will continue on construction of a new coal feed system that will be used for the 100 hour demonstration test.

DATE
FILMED
3/10/94

END