DOE/PC/79653--T12

DRAFT

ADVANCED COMBUSTION SYSTEM FOR INDUSTRIAL BOILERS PHASE II

Quarterly Technical Progress Report

JULY-SEPTEMBER 1990

RECEIVED
USDOE/PETC
91 FEB 28 PM 12:13
ACQUISITION & ASSISTANCE DIV.

Prepared by:

Charles L. Wagoner
John P. Foote
William P. Millard
Richard C. Attig
Roy J. Schulz

University of Tennessee Space Institute
Tullahoma, Tennessee 37388

MASTER

DISTRIBUTION OF THIS DOCUMENT IS UNLIMITED

DOE Contract No. DE-AC22-87PC79653

DISCLAIMER

This report was prepared as an account of work sponsored by an agency of the United States Government. Neither the United States Government nor any agency thereof, nor any of their employees, makes any warranty, express or implied, or assumes any legal liability or responsibility for the accuracy, completeness, or usefulness of any information, apparatus, product, or process disclosed, or represents that its use would not infringe privately owned rights. Reference herein to any specific commercial product, process, or service by trade name, trademark, manufacturer, or otherwise does not necessarily constitute or imply its endorsement, recommendation, or favoring by the United States Government or any agency thereof. The views and opinions of authors expressed herein do not necessarily state or reflect those of the United States Government or any agency thereof.

Table of Contents

Page

1.0 INTRODUCTION 1
- 1.1 Phase I, Summary of Results 2
- 1.2 Initiation of Phase II 7
- 1.3 Phase II, Summary of Previous Results 10

2.0 TECHNICAL PROGRESS IN PHASE II DURING JULY-SEPTEMBER 1990 11
- 2.1 Task 3: Integrated Combustion System Development 11
  - 2.1.1 Procurement of Equipment for Coal Feed System 11
  - 2.1.2 Low-NO_x Burner Modification and Testing .. 12
- 2.2 Task 4: Project Management and Reporting 31

3.0 WORK PLANNED FOR OCTOBER-DECEMBER 1990 32

List of Figures

Page

Figure 1.1. Advanced Coal Combustion System for Industrial Boilers 3
Figure 1.2. UTSI Phase I Replacement Burner 4
Figure 2.1. UTSI Phase II Replacement Burner with Deep Air Staging .. 13
Figure 2.2. Configuration of Air Jets for Deep Staging 15
Figure 2.3. NO_x Emissions for Four-Foot & Six-Foot Refractory 18
Figure 2.4. NO_x Emissions with Opposed Air Jets (6 ft) vs. Four-Foot Benchmark 20
Figure 2.5. NO_x Emissions with 20°cs Jets (6 ft) vs. Four-Foot Benchmark 21
Figure 2.6. NO_x Emissions with **20°cs/45°cc Jets (6 ft) vs. Four-Foot Benchmark** 22
Figure 2.7. NO_x Emissions with Grouped Data from **20°cs and 20°cs/45°cc Jets (6 ft) vs. Four-Foot Benchmark** 23
Figure 2.8. CO Emissions from All Measurements (6 ft) vs. Four-Foot Benchmark 25
Figure 2.9. CO Emissions with Opposed Jets (6 ft) vs. Four-Foot Benchmark 26
Figure 2.10. CO Emissions with 20°cs Air Jets (6 ft) vs. Four-Foot Benchmark 27
Figure 2.11. CO Emissions with 20°cs/45°cc Air Jets (6 ft) vs. Four-Foot Benchmark 28
Figure 2.12. CO Emissions with Grouped Data from 20°cs and 20°cs/45°cc Jets (6 ft) vs. Four-Foot Benchmark 29
Figure 2.13. NO_x Emissions vs. Firing Rate, Detailed UTSI Phase II Burner Performance Comparison 30

List of Tables

Page

Table 2.1. Test Matrix for Deep Air Staging Configurations 16

1.0 INTRODUCTION

The contract start date (for Phase I) was June 11, 1987. Contract completion date is September 11, 1991.

This is the fourth quarterly report covering work on Phase II of the project. The period covered is July through September, 1990.

The purpose of this project is to develop an advanced coal combustion system for industrial boilers. With the new combustion system, coal could be used to replace oil and gas as fuels for many industrial boilers.

The advanced coal combustion system concept includes the following components:

- a new burner for ultra fine coal fuels which could replace existing oil and/or gas burners
- a coal injector that could replace the oil gun in existing burners, as an alternative to complete replacement of the burner assembly
- a coal storage and dense phase coal feed system
- an automatic control system, based on computer control with feedback from low-cost combustion-quality transducers
- ash removal and particulate cleanup equipment.

The components of the advanced coal combustion system are shown schematically in Figure 1.1. Areas of contract activity are enclosed with dotted lines by the large rectangle.

1.1 Phase I, Summary of Results

During Phase I of the project, a coal injector was designed, fabricated, and tested. It is a direct replacement for the oil gun in the original equipment of a 200 hp Cleaver-Brooks fire-tube boiler. The system was tested at coal-firing rates in the range of 2 to 6 million Btu's per hour, firing Upper Elkhorn No. 3 (eastern bituminous, "UE3") coal supplied by Energy International, Incorporated. For these tests, propane was used to preheat the boiler before initiation of coal firing. The propane flow was turned off after coal combustion was established. No combustion air preheat was used. During these tests, boiler efficiency was typically about 85 to 86 percent, while carbon conversion efficiency was approximately 94 percent. Concentrations of CO were less than 150 ppm. The NO_x emissions were less than 0.6 pounds per million Btu's.

Following a series of laser-illuminated cold-flow-visualization tests, a new burner also was designed, fabricated, and tested during Phase I. The arrangement is shown in Figure 1.2. It is a two-stage, swirl

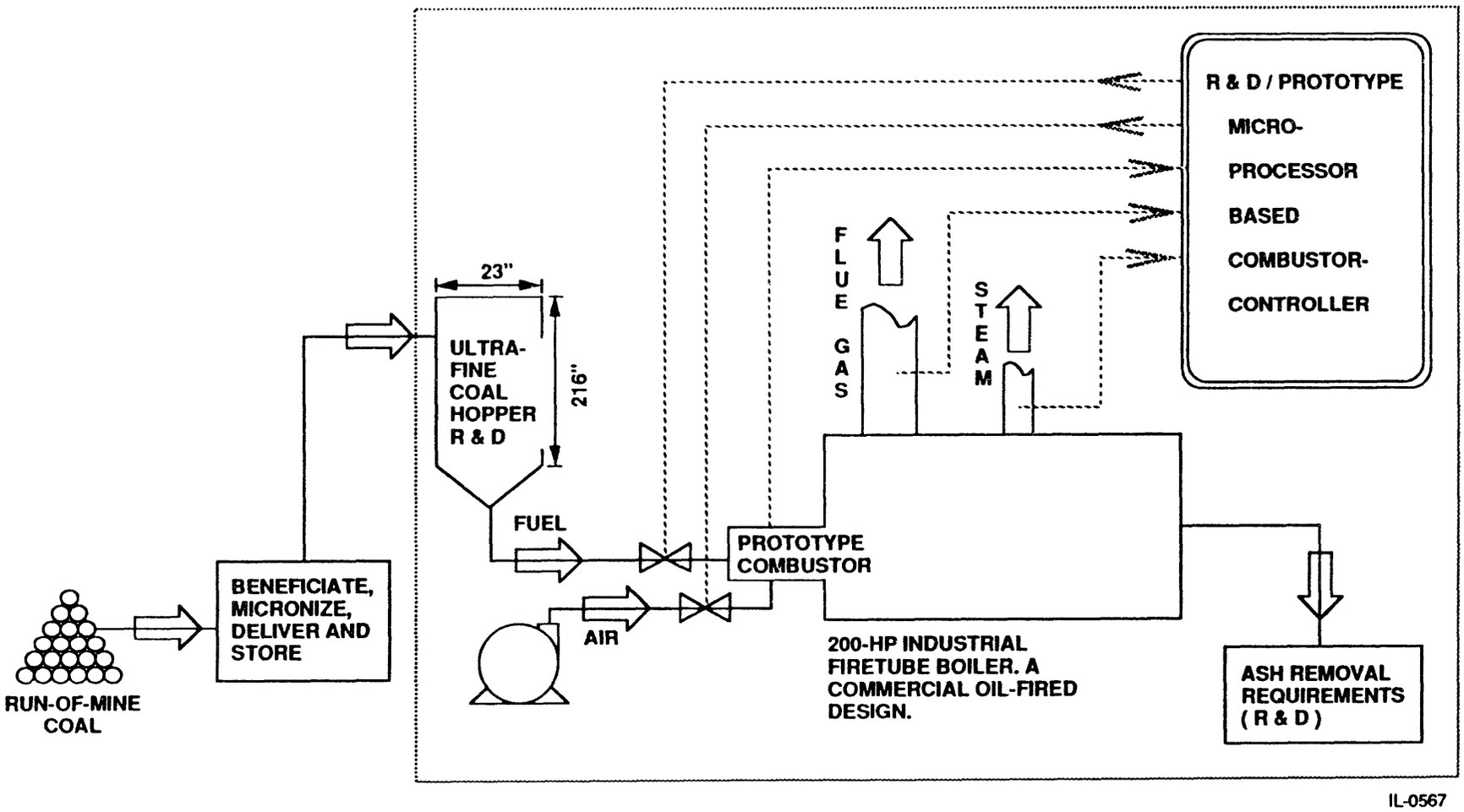

Fig. 1.1. Advanced Combustion System for Industrial Boilers

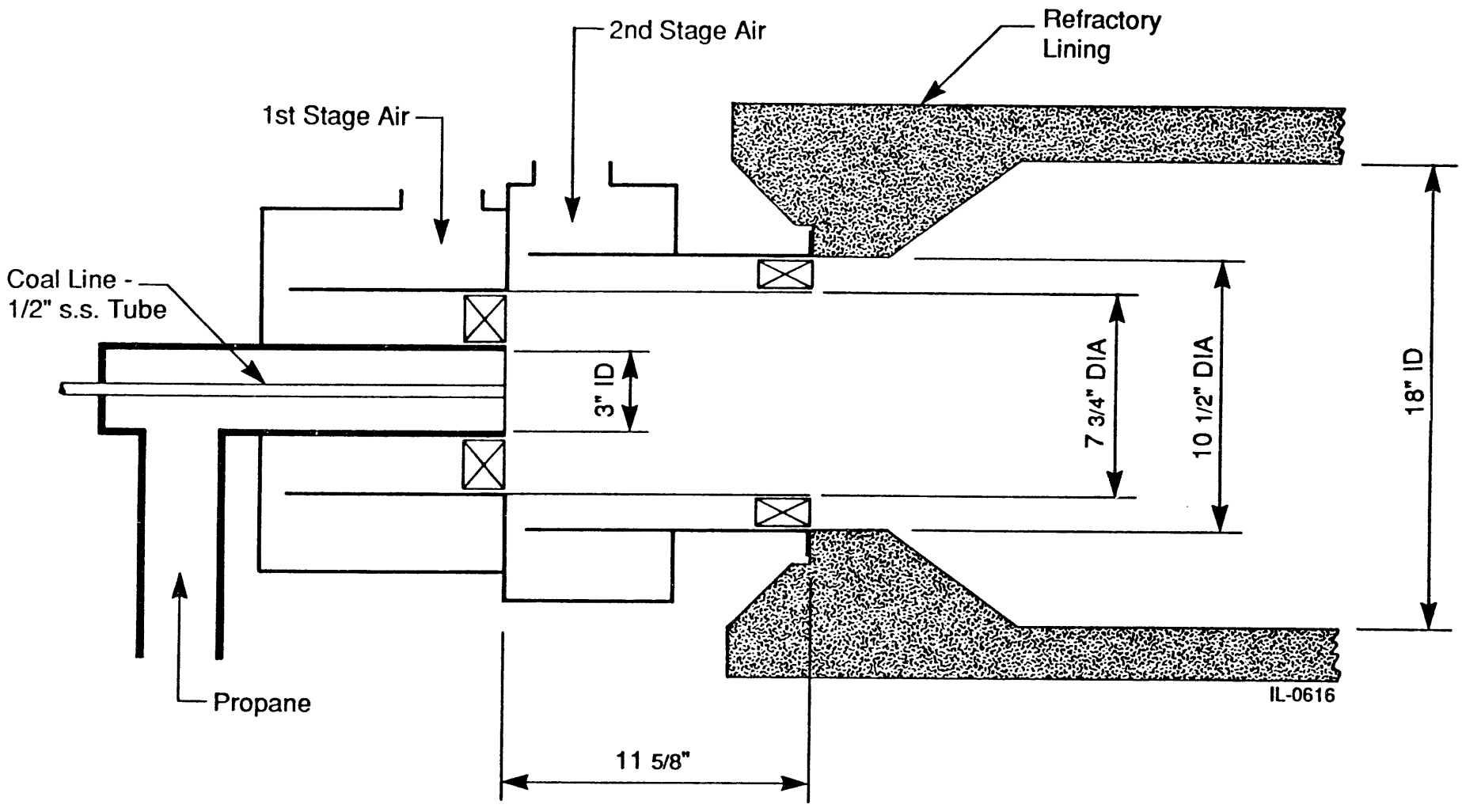

Figure 1.2. UTSI Phase I Replacement Burner

burner which fits in the space previously occupied by the original Cleaver-Brooks burner, and uses the existing section of refractory. Air flow can be regulated independently into each of the two stages. Additionally, the angle is adjustable for individual swirl blades.

Upper Elkhorn No. 3 ultra fine coal was used as the standard fuel for most UTSI-burner tests. Firing rates were in the range of 2 to 6 million Btu's per hour. Upper Elkhorn No. 3 coals were tested with three levels of ash. These were approximately 1.4%, 2.7%, and 4.8% ash, on an as-fired basis. The 2.7%-ash UE3 coal was used for most tests because it exhibited a good balance between ash content and ash-fusion characteristics. The 2.7%-ash UE3 coal also served as a reference and established a baseline for performance. Additionally, a 1.3 float fraction of a western Eagle Butte subbituminous coal was used as the fourth ultra-fine test fuel. It contained 4.4% ash on an as-fired basis.

All four test coals were supplied by Energy International, Inc. with a mean particle size of about 10 μm and a top size of 44 μm. The coals were delivered to UTSI in plastic-lined, 55-gallon steel drums.

Following the same approach as previous tests, propane was used to preheat the boiler before initiation of coal firing. The propane flow was turned off after coal combustion was established. No combustion air

preheat was used with the UTSI burner. Boiler efficiency was approximately three percent higher with UE3 coal than in the previous test series, and typically was about 88 to 89 percent. Carbon conversion efficiency was approximately 97 to 99 percent for UE3 coals. A very high value of 99.9 percent carbon conversion was attained with the 4.4%-ash Eagle Butte coal. These results are about 3 to 6 percent higher than those measured when the UTSI coal injector was used in the Cleaver-Brooks burner.

Forty to sixty percent of the ASTM coal ash remained in the boiler. However, the deposits were powdery and easy to remove by increasing the fan speed after the conclusion of each combustion test. The increased air velocity quickly re-entrained and removed most of the previously-deposited ash.

Concentrations of CO were below 100 ppm. The NO_x emissions ranged from 1.2 to 1.3 pounds per million Btu's with the UE3 coals. With the Eagle Butte coal, a lower level of 0.86 pounds of NO_x per million Btu's was achieved.

In addition to the burner-development activities, a system was designed, fabricated, tested, and used routinely for data acquisition and

manual boiler/burner control. The system is based upon a dedicated micro-computer based on the Intel "286" cpu chip architecture using UTSI-developed software. **In Phase II this system will provide automation of system control and data acquisition.**

1.2 Initiation of Phase II

Phase II started on October 1, 1989.

The main objective of the current work is to move ahead from the primarily R&D oriented approach of Phase I toward commercialization of a complete coal-retrofit system.

In order to accomplish this, our plans include the following goals and activities.

Goals

- Decrease NO_x emissions to less than 0.7 lb/MBtu

  Although the UTSI commercial fire-tube boiler is fired at 6 MBtu/hour and therefore is much smaller than steam generators usually subjected to NO_x regulations, we have based our goal upon the value specified in *Performance Standards for Commercial/Industrial/Institutional Steam Generation* for coal-fired boilers in the 100 MBtu/h to 200 MBtu/h range; a level of 0.6 lb NO_x/MBtu is specified for coal-fired electric utility steam

generators larger than 250 MBtu/hour by the *Performance Standards for Electric Utility Steam Generating Units Commencing After September 18, 1978.* As a supplemental goal, we will attempt to obtain this lower level of emissions with NO_x less than 0.6 lb/MBtu.

- Decrease particulate emissions to less than 0.6 lb/MBtu

  This is based upon the current *UTSI site permit* issued by the state of Tennessee; otherwise, Tennessee particulate limit is 0.8 lb/MBtu for a 6 MBtu/h boiler such as the UTSI unit.

- Increase carbon burnout so all test coals exceed 99% efficiency at a firing rate of approximately 6 MBtu/h

  This is based upon a *stated DOE goal* .

- Increase the turn-down ratio from the present 3:1 capability

  This is based upon *extension of previous achievement* of the stated DOE goal of 3:1.

Planned Activities

- Investigate the effects on reducing NO_x emissions by deep-staging combustion air or reburning
- Add on-line cleaning capabilities for removal of powdery fireside deposits

- Add particulate-removal equipment to reduce stack emissions
- Develop higher efficiency three-stage burner
- Add air pre-heater and evaluate effects
- Add low-cost combustion-quality transducer for automated control of boiler efficiency
- Develop simple, reliable, and inexpensive on-line dense-phase flow-control capability with storage hopper operating at atmospheric pressure and suitable for reloading with coal at any time during extended periods of operation
- Automate the boiler control system
- Evaluate potential of bulk bags for receiving, storing, and unloading ultra fine coal
- Develop a commercially acceptable ultra-fine coal storage and dense-phase feed system
- Demonstrate performance of new three-stage burner
- Make an economic evaluation and develop a commercialization plan
- Demonstrate commercial feasibility of the integrated system with a 100-hour test operation

1.3 Phase II. Summary of Previous Results

Initial work in Phase II concentrated on: a.) adapting a commercially available automotive oxygen sensor for use in the boiler control system; b.) developing a more commercially oriented dense-phase coal transport system; c.) designing, fabricating and testing an improved burner for better combustion efficiency; and d.) adding deep-air-staging capabilities to the new burner to decrease NO_x emissions.

2.0 TECHNICAL PROGRESS IN PHASE II DURING JULY-SEPTEMBER 1990

QUARTERLY SUMMARY: During this quarter, work focused on making improvements in the initial equipment design for the deep air-staging capability needed to reduce NO_x emissions. Several configurations were fabricated and tested in the external test duct. Excellent performance was attained during a series of combustion tests. The lowest NO_x emissions achieved were slightly above 0.4 lb-NO_x/MBtu. This is considerably better than the DOE goal for Phase II work. Additionally, it represents a very significant lowering of NO_x from the previous level of 1.3 lb-NO_x/MBtu, which had been measured without deep air staging.

Also, UTSI personnel attended and made a presentation at the DOE Contractors' Review Meeting in Pittsburgh.

2.1 Task 3: Integrated Combustion System Development

Quarterly activity details follow.

2.1.1 Procurement of Equipment for Coal Feed System

Additional equipment needed for the atmospheric-pressure coal feed system was purchased. This included load cells for the tank and a hoist for loading coal into the tank. Fabrication is underway.

2.1.2 Low-NO_x Burner Modification and Testing

The general configuration of the burner with deep air staging is shown schematically in Figure 2.1. It has a large insulated section which provides for a primary combustion zone operating under reducing conditions with controlled heat losses. Secondary air passes through an annular passage behind the insulation. The air enters at ambient temperature, cools the walls of the primary combustion zone, and heats as it moves through the annulus. Subsequently this *deep-staged* air enters the secondary combustion zone, flowing through multiple orifices and producing eight separate mixing jets.

During this quarter, two insulated (refractory) lengths were tested. These included the original six-foot length and a new four-foot version. The four-foot variation was tested to help identify minimum-length requirements.

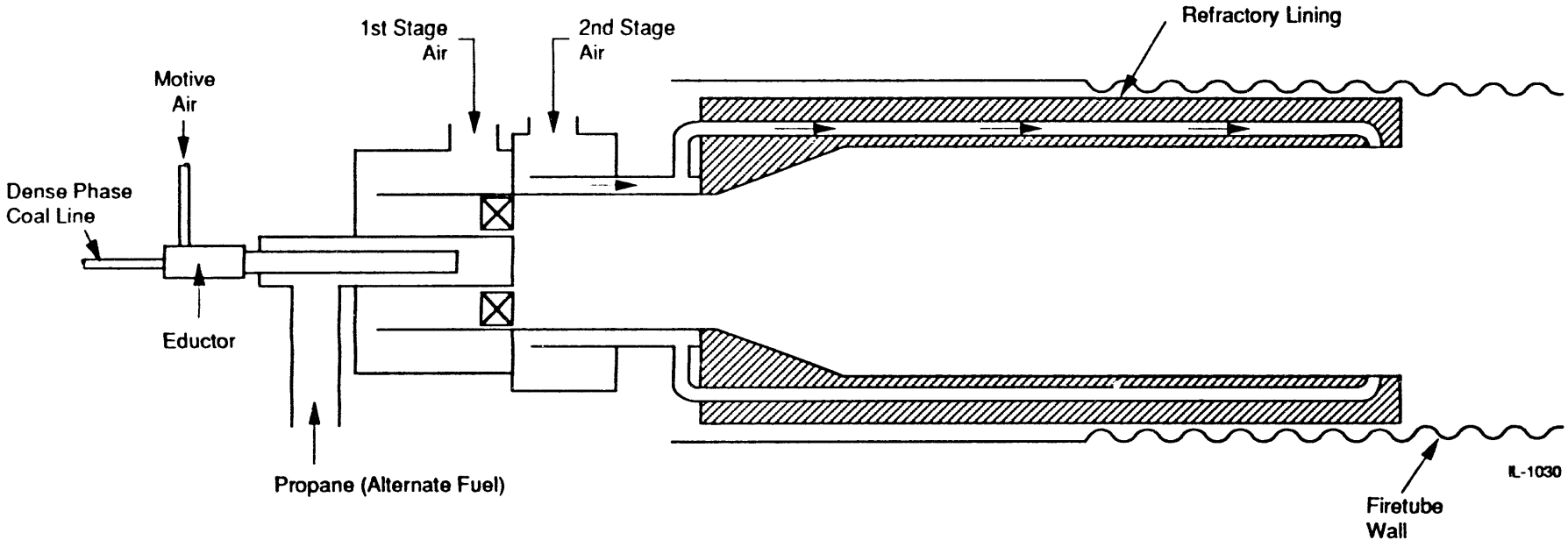

Figure 2.1. UTSI Phase II Replacement Burner with Deep Air Staging

Several arrangements of the air mixing jets also were tested. Figure 2.2 shows that the jets were either opposed (upper half of the figure, right side) or set at a 20° counter-swirl position (lower half of the figure, right side). In addition, the 20° counter swirl was tested in two variations. One of these used 45° counter-current flow (lower half of the figure, left side); the other had no counter-current flow (0°, as shown in the upper half of the figure, left side). The opposed jets were tested without counter flow.

The order of increasing mixing intensity was:

opposed----> 20° counter swirl (cs)----> 20°cs/45° counter current (cc).

The test matrix for the various configurations examined during this reporting period is shown in the following table. Ultra-fine Upper Elkhorn #3 coal with approximately 2.7 weight percent ash was used as the test fuel. This continues to be the "standard" test fuel.

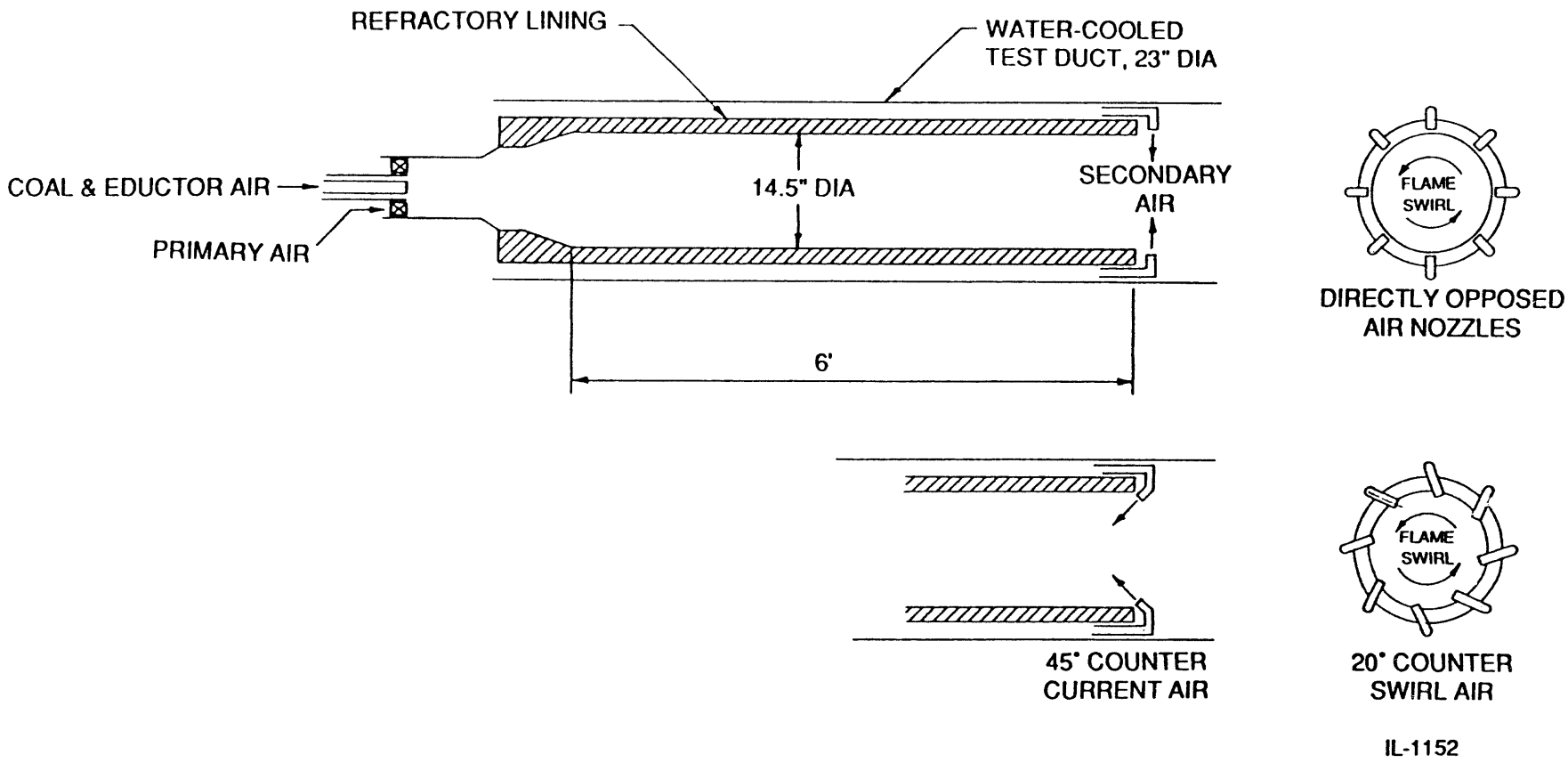

Figure 2.2. Configuration of Air Jets for Deep Staging

Table 2.1. Test Matrix for Deep Air Staging Configurations

REFRACTORY LENGTH, FT	*OPPOSED JETS* (0°cs/0°cc)	*20°cs* (20°cs/0°cc)	*20°cs/45°cc* (20°cs/45°cc)
6	√	√	√
4			√

The principal operational variable was the air-to-fuel ratio in the primary combustion zone. This can be enumerated in terms of stoichiometry, and the symbol ϕ_P indicates the primary stoichiometric ratio (theoretical air/fuel) in this report. For this series of tests, values of ϕ_P were in the range from approximately 0.6 to 0.8. The total (or final) stoichiometric ratio, ϕ_T, was held near 1.2 routinely.

During this reporting period, all tests were made in the external test duct, which is 15-feet long and simulates many of the characteristics of the boiler fire-tube. The test duct is cooled by an external water spray. Combustion gases exhaust directly to the atmosphere. Preliminary testing in the external duct makes observation of the flame much easier, and also makes the burner more accessible for modification. The most successful candidate(s) from the external test

duct screening tests will be evaluated in full detail during future in-boiler tests.

Figure 2.3 is a composite view of the individual NO_x test results. Emissions of NOx are plotted vs. the primary stoichiometric ratio for the normal six-foot refractory configuration and an experimental four-foot design. Figure 2.3 clearly shows that emissions measurements with values of ϕ_P from 0.6 to 0.8 always were lower with the six-foot length than those obtained using the four-foot version with equivalent ϕ_P values. This difference is even more decisive when one considers that the shorter burner was tested only in what was believed to be the most efficient arrangement using the most intense mixing configuration, 20° counter-swirl/45° counter-current. The levels of carbon monoxide (CO) also are significantly lower with the six-foot length. This will be discussed in more detail later in this report.

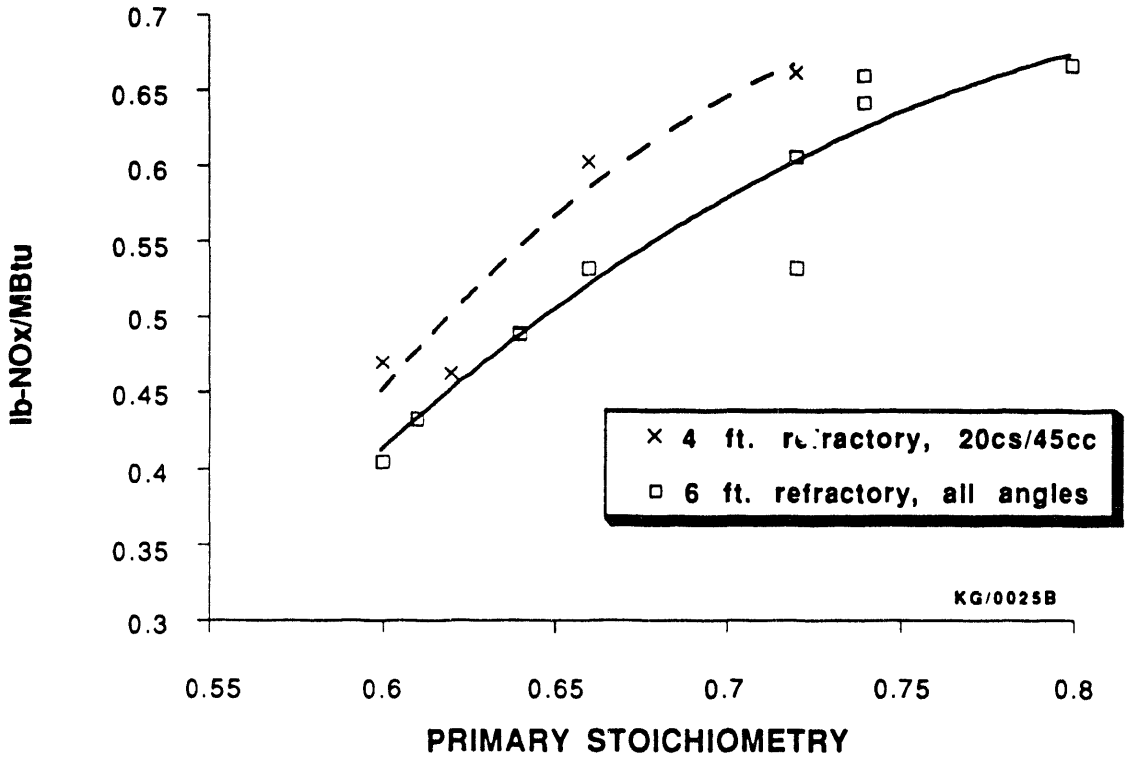

Figure 2.3. NO_x Emissions for Four-Foot & Six-Foot Refractory

In the following figures, the four-foot results (20°cs/45°cc) will be used as a benchmark or standard of comparison for the individual six-foot data sets.

Figures 2.4 through 2.12 illustrate the superior performance of the six-foot burner. These figures illustrate the influence of deep-staged air-jet configuration, first on NO_x (Figures 2.4 through 2.7), and then on CO emissions (Figures 2.8 through 2.12).

Opposed air jets were tested initially with the six-foot burner. This produced the results shown in Figure 2.4. Emissions of NOx were below 0.6 lb-NOx/MBtu. The linear trend line had a relatively low correlation (R^2 for six-foot = 0.70), but it did indicate decreasing NOx emissions were associated with decreasing values of ϕ_P.

The jets were reconfigured with 20° counter swirl, and a second test series was conducted. Results are shown in Figure 2.5. At the lowest primary stoichiometry in this series (ϕ_P = 0.61, with ϕ_T = 1.12), NOx emissions were 0.433 lb-NOx/MBtu. Excellent flame stability and emissions-data correlation were observed (R^2 for six-foot = 0.998, compared with R^2 for four-foot benchmark of 0.911).

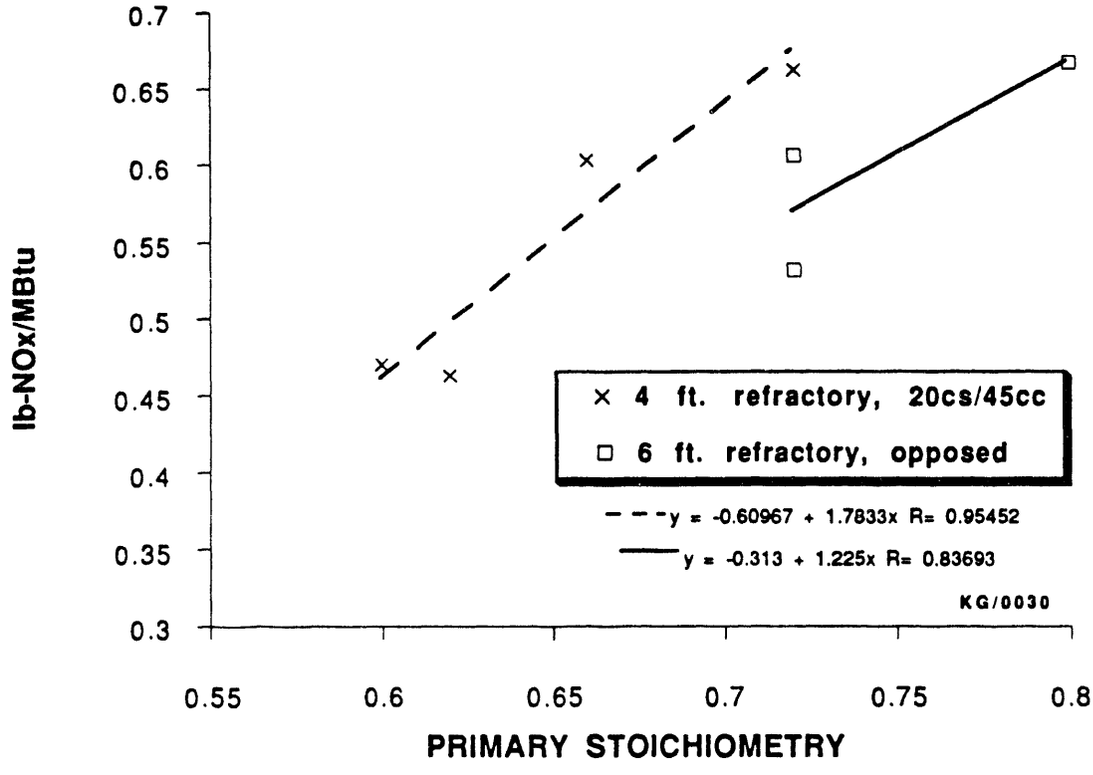

Figure 2.4. NO_x Emissions with Opposed Air Jets (6 ft) vs. Four-Foot Benchmark

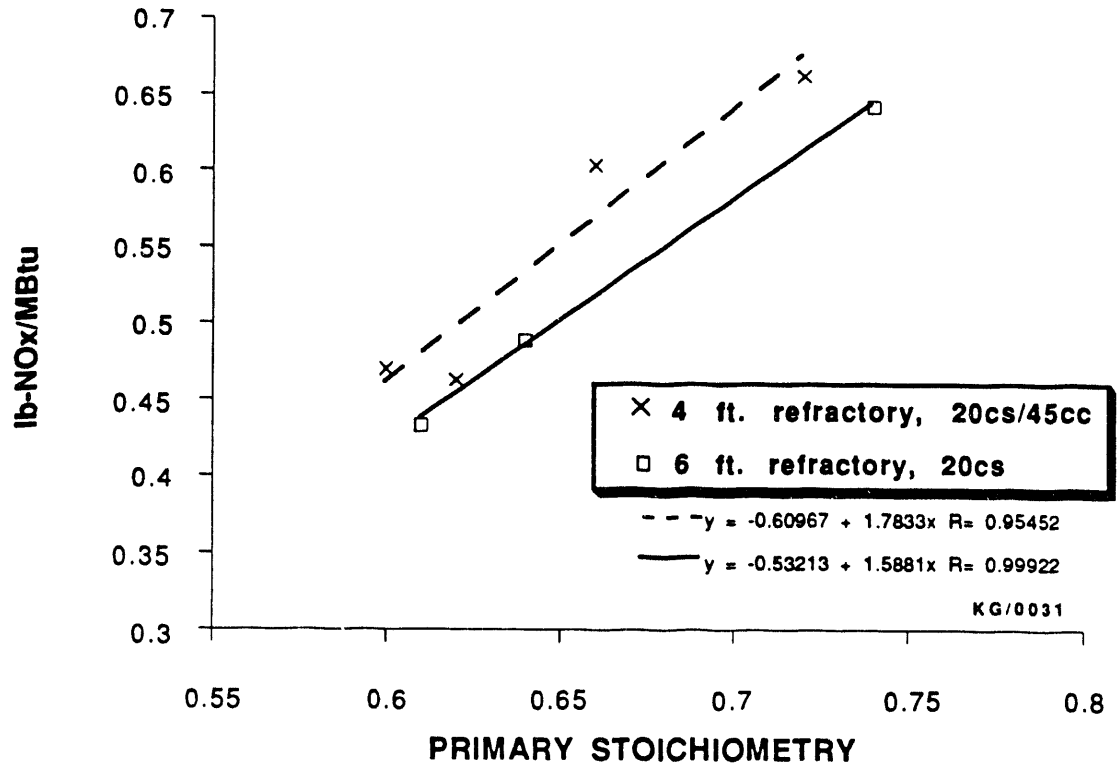

Figure 2.5. NO_x Emissions with 20°cs Jets (6 ft) vs. Four-Foot Benchmark

A third configuration was tested with the six-foot burner (20°cs/45°cc). Results are shown in Figure 2.6. At the lowest primary stoichiometry (ϕ_P = 0.60, with ϕ_T = 1.15), ***NOx emissions were 0.405 lb-NO_x/MBtu.*** Flame stability with ultra fine coal-firing and data correlation remained excellent (R^2 for six-foot = 0.994 where R is the correlation coefficient). The start-up flame (propane-only) was somewhat less stable than normal with the 20°cs/45°cc configuration, however.

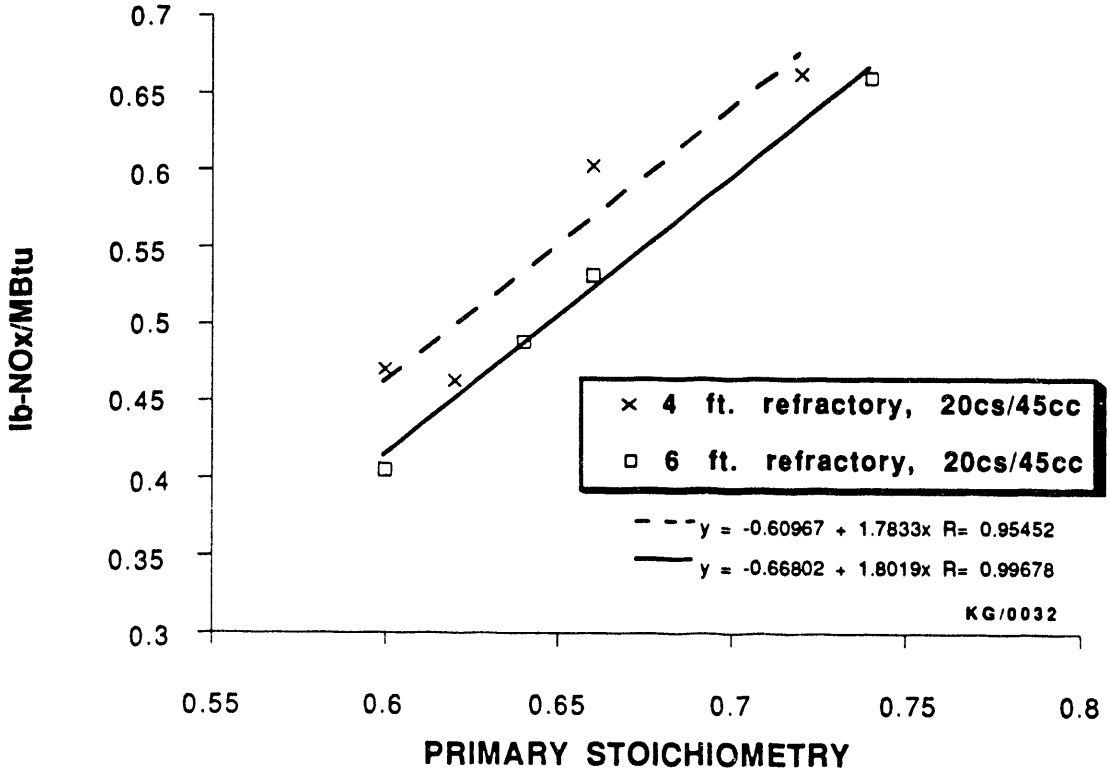

Figure 2.6. NO_x Emissions with 20°cs/45°cc Jets (6 ft) vs. Four-Foot Benchmark

Overall, the six-foot burner performed very well relative to lowered NO_x emissions with either 20°cs or 20°cs/45°cc air jets. Data for both of these designs are grouped for Figure 2.7 to provide a "NO_x-summary" correlation. Even with the grouped data, the data correlation is excellent (R^2 for six-foot = 0.991). The equations presented in Figure 2.7 are recommended for describing NOx characteristics obtained in the external duct using the four- and six-foot burner designs.

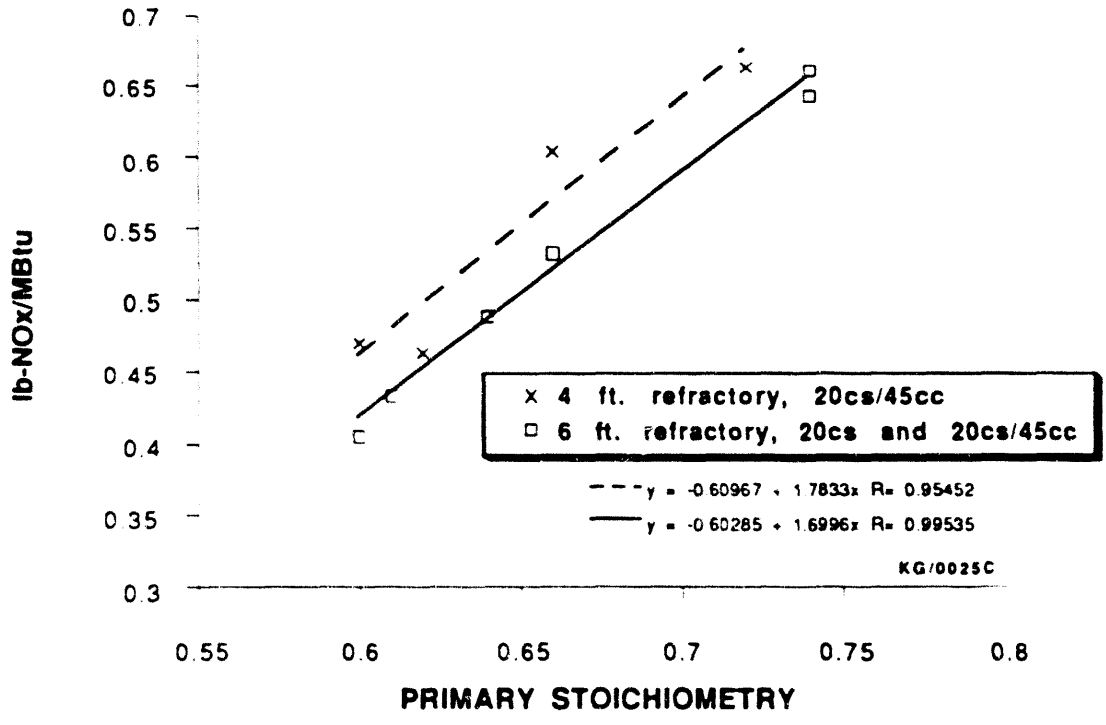

Figure 2.7. NO_x Emissions with Grouped Data from 20°cs and 20°cs/45°cc Jets (6 ft) vs. Four-Foot Benchmark

Carbon monoxide emissions also were monitored during the series of tests. The values reported for CO should be considered mainly as relative numbers. They are significantly higher than what we anticipate for operation inside the boiler with a "closed" combustion chamber as opposed to the "open-ended" test duct combustion-gas exit. Additionally, the instrumentation available during these tests was operated at the low end of the measurement span, thus decreasing accuracy.

Figure 2.8 is a composite view of the individual CO test results which will follow in separate figures. Emissions of CO are plotted vs. the primary stoichiometric ratio for the normal six-foot refractory configuration and the experimental four-foot design. **Figure 2.8 shows emissions with ϕ_P from 0.6 to 0.8 always were much lower with the six-foot length than those obtained using the four-foot version, regardless of the value of ϕ_P.**

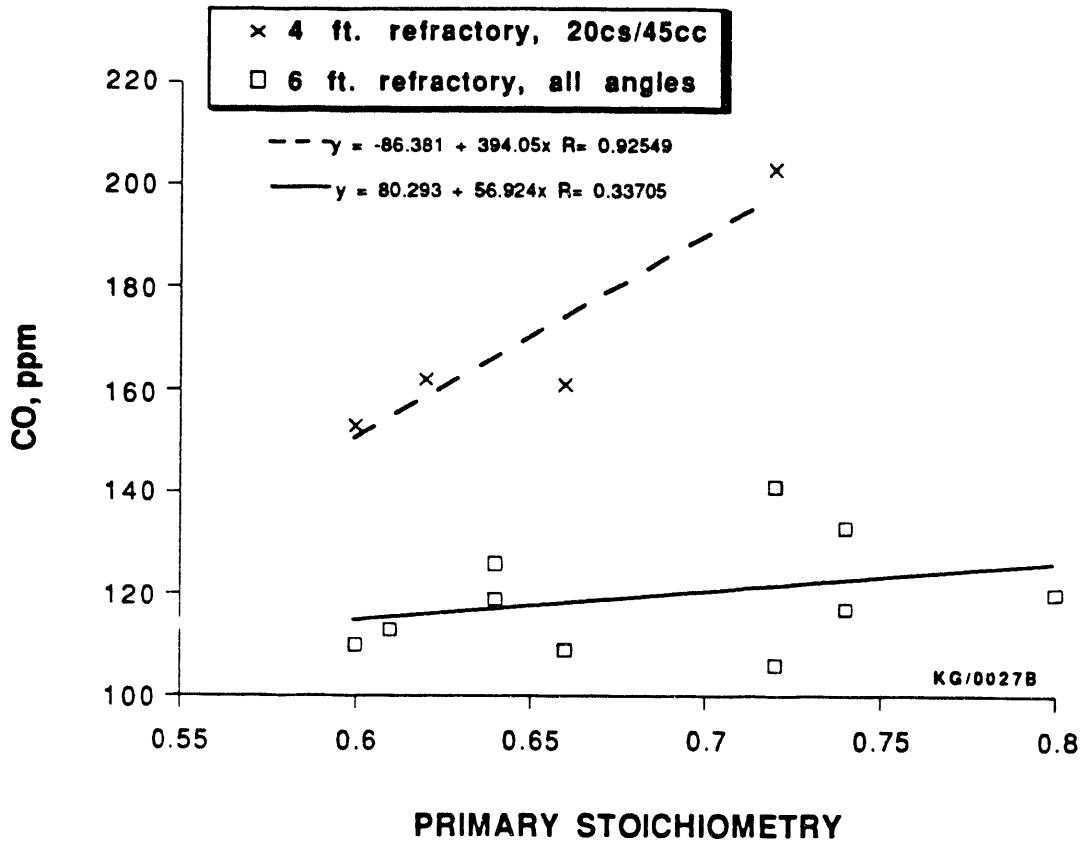

Figure 2.8. CO Emissions from <u>All Measurements (6 ft)</u> vs. Four-Foot Benchmark

Results with opposed air jets with the six-foot burner are shown in Figure 2.9. Emissions of CO always were below 142 ppm with the six-foot burner and above 153 ppm with the four-foot. The linear trend line had essentially no correlation for the three-point six-foot data (R^2 = 0.013), but indicated decreasing CO emissions were associated with decreasing values of ϕ_P for the four-foot burner (R^2 = 0.86). The data had significant scatter.

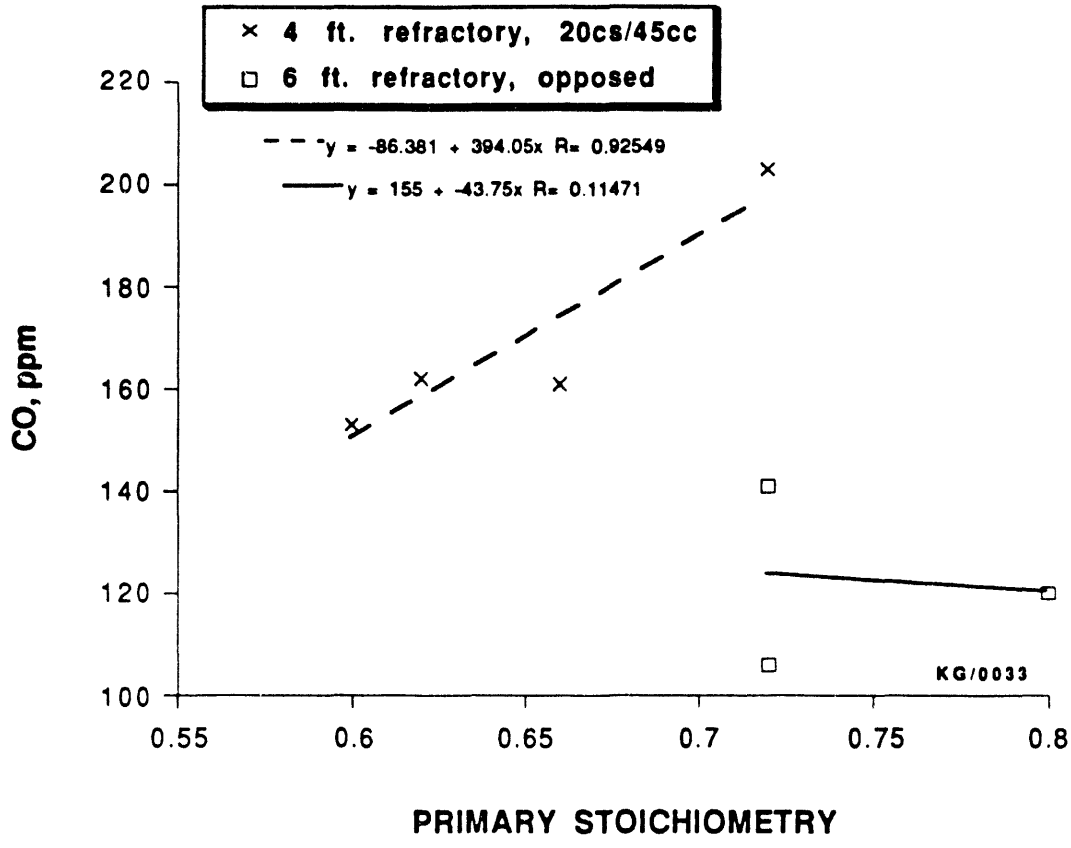

Figure 2.9. CO Emissions with <u>Opposed Jets (6 ft)</u> vs. Four-Foot Benchmark

Results are shown in Figure 2.10 for the six-foot, 20° counter-swirl test series. At the lowest primary stoichiometry in this series (ϕ_P = 0.61, with ϕ_T = 1.12), CO emissions were 113 ppm. Excellent flame stability and emissions-data correlation were observed (R^2 for six-foot = 0.994), compared with R^2 for four-foot benchmark of 0.86). Emissions of CO decreased with decreasing values of ϕ_P. Therefore, ***operation with lower values of ϕ_P decreases emissions of both NO_x and CO.***

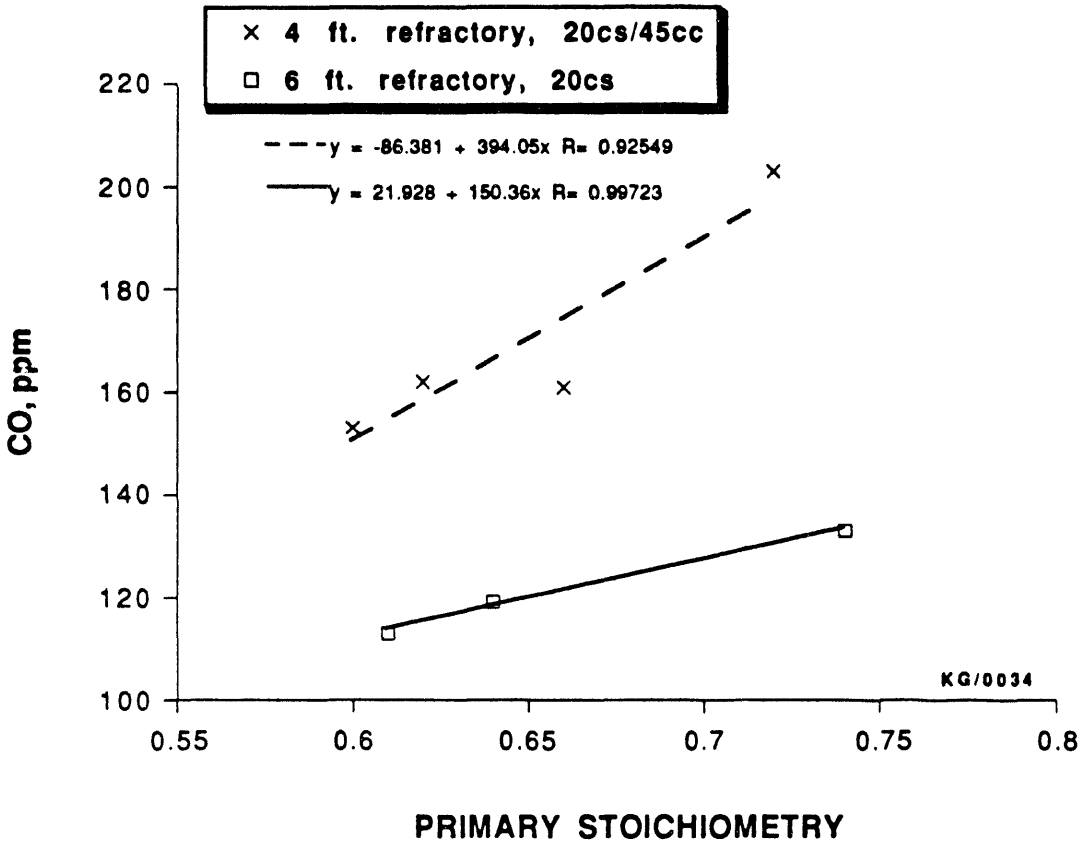

Figure 2.10. CO Emissions with 20°cs Air Jets (6 ft) vs. Four-Foot Benchmark

Results are shown in Figure 2.11 for the six-foot burner with a 20°cs/45°cc configuration. At the lowest primary stoichiometry (ϕ_P = 0.60, with ϕ_T = 1.15), CO emissions were 110 ppm. Data correlation decreased greatly and showed significant scatter (R^2 for six-foot = 0.030), but the range of values was extremely small (CO = 109 to 126 ppm). Thus, the level of CO emissions was low and essentially constant during this test series.

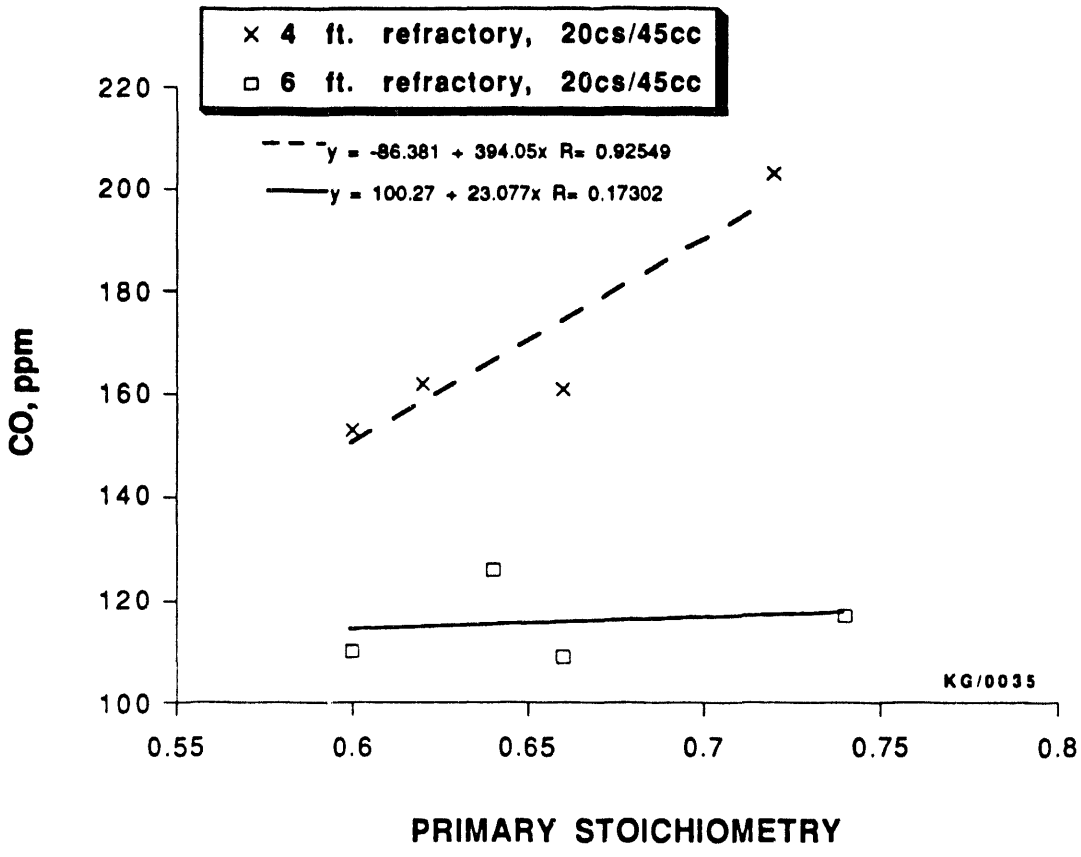

Figure 2.11. CO Emissions with 20°cs/45°cc Air Jets (6 ft) vs. Four-Foot Benchmark

Overall, the six-foot burner performed very well relative to lowered CO emissions with either 20°cs or 20°cs/45°cc air jets. Data for both of these designs are grouped for Figure 2.12 to provide a "CO-summary" correlation. With the grouped data, the correlation line shows a very slight trend for lower CO emissions with lower ϕ_P values (R^2 for six-foot = 0.31). The equations presented in Figure 2.12 are recommended for

describing NOx characteristics obtained in the external duct using the four- and six-foot burner designs.

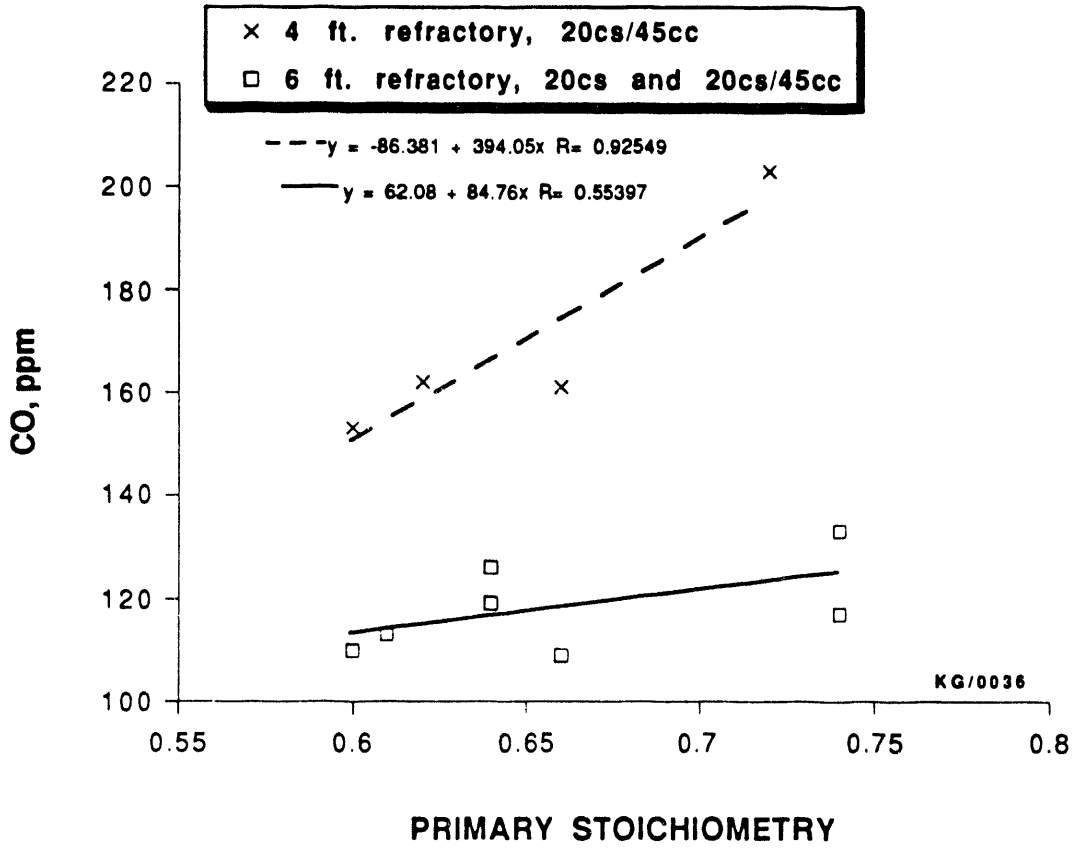

Figure 2.12. CO Emissions with Grouped Data from 20°cs and 20°cs/45°cc Jets (6 ft) vs. Four-Foot Benchmark

In Figure 2.13 the best deep-staged performance achieved this quarter with 2.7% ash Upper Elkhorn #3, ultra-fine coal (P2, filled-square symbol) is compared with previous results. This figure includes data from the Phase 2 burner before staging (P2, open-square symbol), the original Cleaver-Brooks burner fitted with a UTSI coal injector (CB), and the Phase 1 UTSI burner (P1). In this figure UE3 = Upper Elkhorn #3 coal; EBF = cleaned Eagle Butte coal, and % = weight percent ash in as-fired coal.

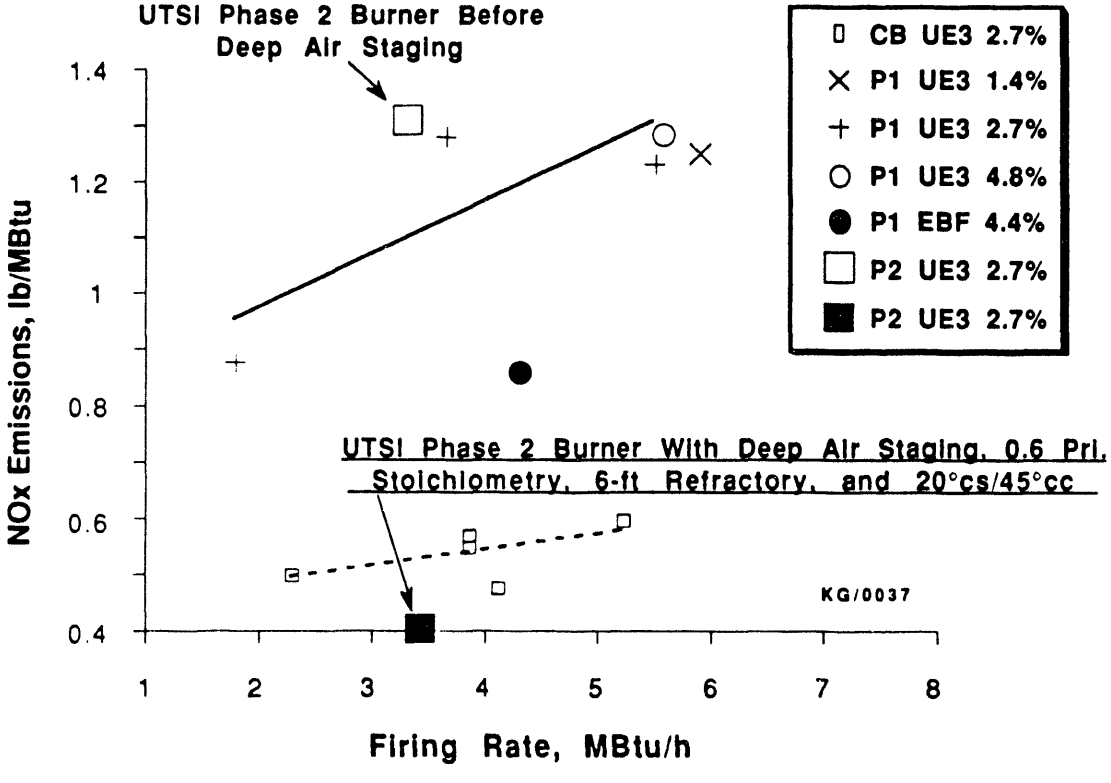

Figure 2.13. NO_x Emissions vs. Firing Rate, Detailed UTSI Phase II Burner Performance Comparison

The Phase 2 burner with deep air staging has produced the lowest NOx emissions to date. This is significantly better than the contract goal of <0.7 lb/MBtu or the supplemental UTSI goal of <0.6 lb/MBtu. It is expected that the carbon conversion efficiency will continue to exceed 99 percent when the burner is installed inside the Cleaver-Brooks 200 hp fire tube boiler.

2.2 Task 4: Project Management and Reporting

The June, July, and August 1990 monthly reports were issued.

The January - March 1990 Quarterly Technical Progress Report was completed.

John Foote and Charles Wagoner attended the DOE Contractors' Review Meeting in Pittsburgh, Pennsylvania and presented the results of the project to August, 1990.

3.0 WORK PLANNED FOR OCTOBER-DECEMBER 1990

During the next quarter, work will continue on development of a low-NO_x coal combustor for the boiler system. Reburning tests are planned using propane to reduce the NO_x levels even further. Work also will continue on construction of a new coal feed system that will be used for the 100-hour demonstration test. Initial tests will be conducted with the UTSI boiler control and automation system.

It is planned to try burning a normally-pulverized coal sample (approximately 70% passing a number 200 sieve). This will help evaluate the ability of the burner to handle fuel that is not micronized to the ultra fine level.

END

DATE FILMED

3/14/94