DOE/PC/79653--715

DRAFT

ADVANCED COMBUSTION SYSTEM FOR INDUSTRIAL BOILERS PHASE II

Quarterly Technical Progress Report

APRIL-JUNE 1991

Prepared by:

Charles L. Wagoner
John P. Foote
William P. Millard
Richard C. Attig
Roy J. Schulz

University of Tennessee Space Institute
Tullahoma, Tennessee 37388

DOE Contract No. DE-AC22-87PC79653

DISCLAIMER

This report was prepared as an account of work sponsored by an agency of the United States Government. Neither the United States Government nor any agency thereof, nor any of their employees, makes any warranty, express or implied, or assumes any legal liability or responsibility for the accuracy, completeness, or usefulness of any information, apparatus, product, or process disclosed, or represents that its use would not infringe privately owned rights. Reference herein to any specific commercial product, process, or service by trade name, trademark, manufacturer, or otherwise does not necessarily constitute or imply its endorsement, recommendation, or favoring by the United States Government or any agency thereof. The views and opinions of authors expressed herein do not necessarily state or reflect those of the United States Government or any agency thereof.

MASTER

DISTRIBUTION OF THIS DOCUMENT IS UNLIMITED

Table of Contents

Page

1.0 INTRODUCTION 1
- 1.1 Phase I, Summary of Results 1
- 1.2 Initiation of Phase II 4
- 1.3 Phase II, Summary of Previous Results 6

2.0 TECHNICAL PROGRESS IN PHASE II DURING APRIL-JUNE 1991 7
- 2.1 Task 3: Integrated Combustion System Development 7
  - 2.1.1 Combustion Testing 7
  - 2.1.2 Controls Development 16
  - 2.1.3 Preparations for 100 Hour Combustion Test 20
  - 2.1.4 Commercialization Effort 21
- 2.2 Task 4 - Project Management and Reporting 22

3.0 WORK PLANNED FOR JULY-SEPTEMBER 1991 22

List of Figures

		Page
Figure 2.1	Coal Feed System	8
Figure 2.2	Two-Stage Low-NOx Combustor	9
Figure 2.3	High Fire NOx and CO vs. Primary Stoichiometry	12
Figure 2.4	Baghouse Installation	15
Figure 2.5	Photos Showing Soot Blower Installation	17
Figure 2.6	Spectral Response of Flame Detector Photodiode	19

List of Tables

Page

Table 2.1. Results of Tailpipe Arrangement Variation Tests 11

1.0 INTRODUCTION

The contract start date (for Phase I) was June 11, 1987. Contract completion date is November 30, 1991.

This is the seventh quarterly report covering work on Phase II of the project. The period covered is April through June 1991.

The purpose of this project is to develop an advanced coal combustion system for industrial boilers. With the new combustion system, coal could be used to replace oil and gas as fuels for many industrial boilers.

The advanced coal combustion system concept includes the following components:

- a new burner for ultra fine coal fuels which could replace existing oil and/or gas burners
- a coal injector that could replace the oil gun in existing burners, as an alternative to complete replacement of the burner assembly
- a coal storage and dense phase coal feed system
- an automatic control system, based on computer control with feedback from low-cost combustion-quality transducers
- ash removal and particulate cleanup equipment.

1.1 Phase I. Summary of Results

During Phase I of the project, a coal injector was designed, fabricated, and tested. It is a direct replacement for the oil gun in the original equipment of a 200 hp Cleaver-Brooks fire-tube boiler. The system was tested at coal-firing rates in the range of 2 to 6 million Btu's per hour, firing Upper Elkhorn No. 3 (eastern bituminous, "UE3")

coal supplied by Energy International, Incorporated. For these tests, propane was used to preheat the boiler before initiation of coal firing. The propane flow was turned off after coal combustion was established. No combustion air preheat was used. During these tests, boiler efficiency was typically about 85 to 86 percent, while carbon conversion efficiency was approximately 94 percent. Concentrations of CO were less than 150 ppm. The NO_x emissions were less than 0.6 pounds per million Btu's.

Following a series of laser-illuminated cold-flow-visualization tests, a new burner also was designed, fabricated, and tested during Phase I. It is a two-stage, swirl burner which fits in the space previously occupied by the original Cleaver-Brooks burner, and uses the existing section of refractory. Air flow can be regulated independently into each of the two stages. Additionally, the angle is adjustable for individual swirl blades.

Upper Elkhorn No. 3 ultra fine coal was used as the standard fuel for most UTSI-burner tests. Firing rates were in the range of 2 to 6 million Btu's per hour. Upper Elkhorn No. 3 coals were tested with three levels of ash. These were approximately 1.4%, 2.7%, and 4.8%, on an as-fired basis. The 2.7%-ash UE3 coal was used for most tests because it exhibited a good balance between ash content and ash-fusion characteristics. The 2.7%-ash UE3 coal also served as a reference and established a baseline for performance. Additionally, a 1.3 float fraction of a western Eagle Butte subbituminous coal was used as the fourth ultra-fine test fuel. It contained 4.4% ash on an as-fired basis.

All four test coals were supplied by Energy International, Inc. with a mean particle size of about 10 μm and a top size of 44 μm. The coals were delivered to UTSI in plastic-lined, 55-gallon steel drums.

Following the same approach as previous tests, propane was used to preheat the boiler before initiation of coal firing. The propane flow was turned off after coal combustion was established. No combustion air preheat was used with the UTSI burner. Boiler efficiency was approximately three percent higher with UE3 coal than in the previous test series, and typically was about 88 to 89 percent. Carbon conversion efficiency was approximately 97 to 99 percent for UE3 coals. A very high value of 99.9 percent carbon conversion was attained with the 4.4%-ash Eagle Butte coal. These results are about 3 to 6 percent higher than those measured when the UTSI coal injector was used in the Cleaver-Brooks burner.

Forty to sixty percent of the ASTM coal ash remained in the boiler. However, the deposits were powdery and easy to remove by increasing the fan speed after the conclusion of each combustion test. The increased air velocity quickly re-entrained and removed most of the previously-deposited ash.

Concentrations of CO were below 100 ppm. The NO_x emissions ranged from 1.2 to 1.3 pounds per million Btu's with the UE3 coals. With the Eagle Butte coal, a lower level of 0.86 pounds of NO_x per million Btu's was measured.

In addition to the burner-development activities, a system was designed, fabricated, tested, and used routinely for data acquisition and manual boiler/burner control. The system is based upon a dedicated micro-computer based on the Intel

"286" cpu chip architecture using UTSI-developed software. **In Phase II this system will provide automation of system control and data acquisition.**

1.2 Initiation of Phase II

Phase II started on October 1, 1989.

The main objective of the current work is to move ahead from the primarily R&D oriented approach of Phase I toward commercialization of a complete coal-retrofit system.

In order to accomplish this, our plans include the following goals and activities.

Goals

- Decrease NO_x emissions to less than 0.7 lb/MBtu

  Although the UTSI commercial fire-tube boiler is fired at 6 MBtu/hour and, therefore, is much smaller than steam generators usually subjected to strict NO_x regulations, we have based our goal upon the value specified in *Performance Standards for Commercial/Industrial/Institutional Steam Generation* for coal-fired boilers in the 100 MBtu/h to 200 MBtu/h range. A level of 0.6 lb NO_x/MBtu is specified for coal-fired electric utility steam generators larger than 250 MBtu/hour by the *Performance Standards for Electric Utility Steam Generating Units Commencing After September 18, 1978.* As a supplemental goal, we will attempt to obtain this lower level of emissions with NO_x less than 0.6 lb/MBtu.

- Decrease particulate emissions to less than 0.6 lb/MBtu

  This is based upon the current *UTSI site permit* issued by the state of Tennessee; otherwise, Tennessee particulate limit is 0.8 lb/MBtu for a 6 MBtu/h boiler such as the UTSI unit.

- Increase carbon burnout so all test coals exceed 99% efficiency at a firing rate of approximately 6 MBtu/h

  This is based upon a *stated DOE goal*.

- Increase the turn-down ratio from the present 3:1 capability

  This is based upon *extension of previous achievement* of the stated DOE goal of 3:1.

Planned Activities

- Investigate the effects on reducing NO_x emissions by deep-staging combustion air or reburning
- Add on-line cleaning capabilities for removal of powdery fireside deposits
- Add particulate-removal equipment to reduce stack emissions
- Develop higher efficiency three-stage burner
- Add air pre-heater and evaluate effects
- Add low-cost combustion-quality transducer for automated control of boiler efficiency

- Develop simple, reliable, and inexpensive on-line dense-phase flow-control capability with storage hopper operating at atmospheric pressure and suitable for reloading with coal at any time during extended periods of operation
- Automate the boiler control system
- Evaluate potential of bulk bags for receiving, storing, and unloading ultra fine coal
- Develop a commercially acceptable ultra-fine coal storage and dense-phase feed system
- Demonstrate performance of new three-stage burner
- Make an economic evaluation and develop a commercialization plan
- Demonstrate commercial feasibility of the integrated system with a 100-hour test operation

1.3 Phase II, Summary of Previous Results

Work in Phase II has concentrated on: a.) adapting a commercially available automotive oxygen sensor for use in the boiler control system; b.) developing a commercially oriented dense-phase coal transport system; c.) designing, fabricating, testing, and fine tuning an improved burner for better combustion efficiency; and d.) adding deep-air-staging capabilities to the new burner to decrease NO_x emissions to slightly above 0.4 lb-NOx/MBtu with ultra fine coal. Carbon burnout of 99.1 percent was achieved in the Cleaver-Brooks fire-tube boiler with NOx emission of 0.44 lb/MBtu during testing with micronized Upper Elkhorn #3 coal with 2.4% ash, as fired. This performance is considerably better than the DOE goal for Phase II work.

Reburning tests were conducted using ultra fine coal and propane in the external, water-cooled 15-foot long test duct. When propane supplied approximately 14% of the heat input, NO_x levels were as low as 0.295 lb-NOx/MBtu. Initial testing of the UTSI boiler control and automation system was successful.

Normally-pulverized coal (PC) with approximately 70% passing through a number 200 sieve was burned with promising results for this economical fuel.

With the newly-completed UTSI on-line refillable coal feed system operating in air at atmospheric pressure, long-duration operation is feasible with coal being loaded periodically into the hopper from bulk bags. This technique will be used during the upcoming 100-hour demonstration test.

2.0 TECHNICAL PROGRESS IN PHASE II DURING APRIL-JUNE 1991

2.1 Task 3: Integrated Combustion System Development

Quarterly activity details follow.

2.1.1 Combustion Testing

During this quarter, several coal combustion tests were carried out in the boiler using the eductor coal feed system and the two-stage combustor. The coal feed system and combustor are shown in Figures 2.1 and 2.2. The main goal for these tests was to determine the optimum combustor setup for low NOx emissions while maintaining good carbon conversion efficiency. It was found during the tests that the amount of air introduced into the combustor along with the coal through the eductor tailpipe was a critical parameter for both NOx formation and carbon conversion. Using the new fluidized coal hopper discharge arrangement, the air required for eductor

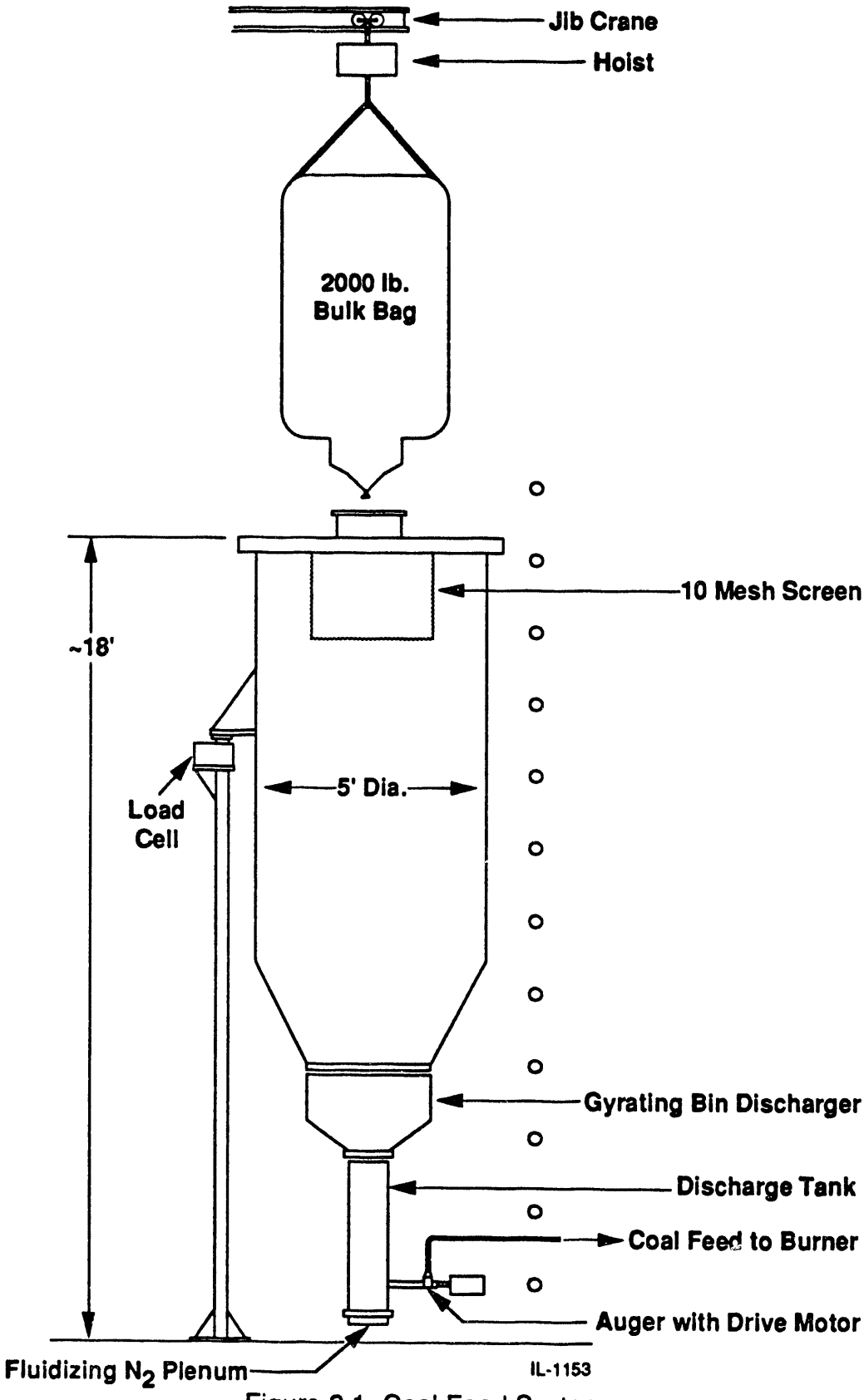

Figure 2.1 Coal Feed System

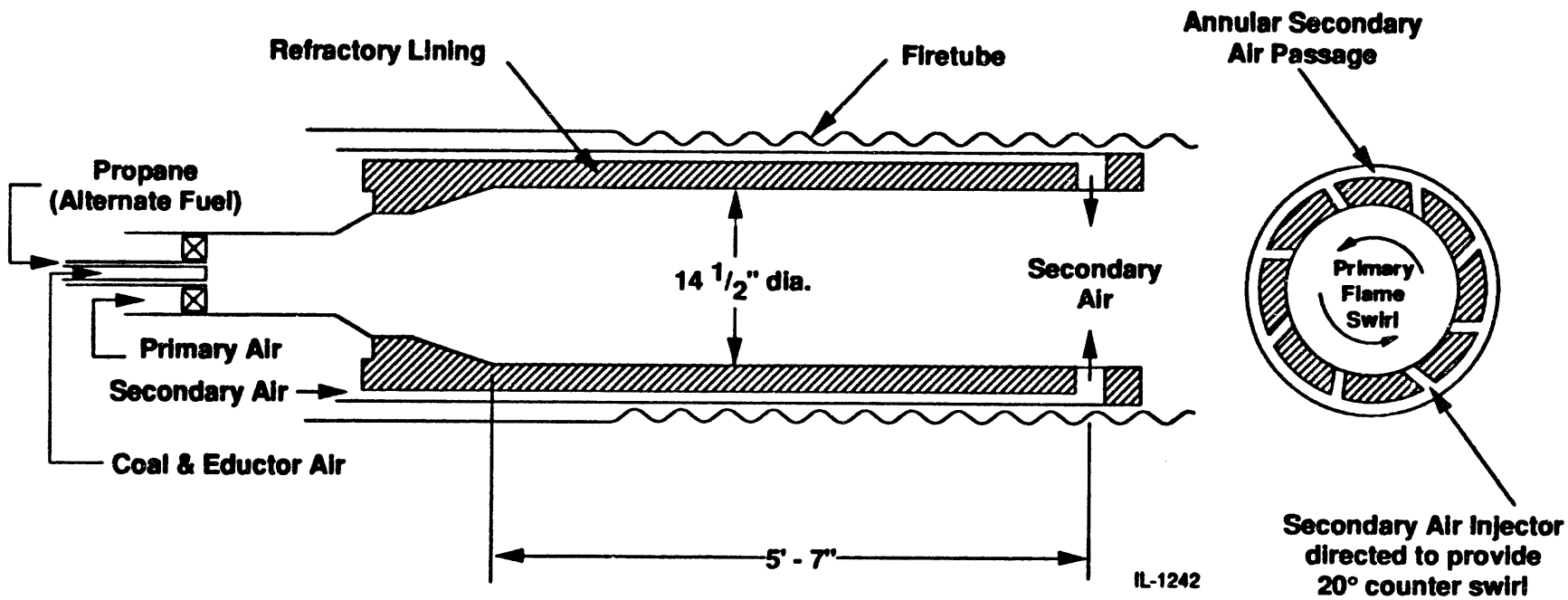

Figure 2.2 Two-Stage Low-NO_x Combustor

operation varies from about 12 percent of the total combustion air at a 2 MBtu/h firing rate to about 8 percent at 4 and 6 MBtu/h. (During previous testing using the old coal tank, the eductor air requirement was about 12 percent at 4 MBtu/h.) In initial tests, only the amount of air needed for eductor operation was introduced through the tailpipe. Combustor operation under this condition was satisfactory at 2 MBtu/h but not at 4 or 6 MBtu/h. At 4 and 6 MBtu/h firing rates, carbon conversion was typically less than 98 percent (based on ash exiting the stack), and CO was relatively high. It was necessary to operate the combustor at a primary stoichiometry of 0.40 or less in order to meet the goal of 0.6 lb/MBtu for NOx emission.

A second test was carried out in which the inside diameter of the eductor tailpipe was reduced from 1.61 inches to 1.05 inches, while all other parameters were maintained the same. The velocity of the coal-air mixture entering the combustor was thus increased by a factor of about 2.35 compared to the previous arrangement. However, the increased coal-air velocity resulted in only a minor improvement in combustor performance. A third test was carried out in which the 1.61 inch ID eductor tailpipe was modified to allow addition of air independent of the eductor air. During this test, it was found that satisfactory combustor performance could be achieved at all firing rates by introducing about 12 percent of the total combustion air through the tailpipe (equivalent to a tailpipe exit stoichiometry of about 0.15). Apparently the amount of air premixed with the coal is critical in achieving the very intense combustion needed in the reducing zone of the combustor. With the increased tailpipe air, the minimum primary zone stoichiometry needed to maintain NOx emission below 0.6 lb/MBtu increased from about 0.40 to about 0.55. Apparently in the low tailpipe

stoichiometry case, the effective residence time in the reducing zone is less, thus allowing more fuel-bound nitrogen to enter the oxidizing zone before reacting to the N_2. Results of the tests are summarized in Table 2.1.

Table 2.1. Results of Tailpipe Arrangement Variation Tests

TAILPIPE ARRANGEMENT	FIRING RATE (MBtu/h)	TAILPIPE EXIT STOICH.	STAGE 1 STOICH.	TOTAL STOICH.	% CARBON BURNOUT	NOx EMISSION (lb/MBtu)	CO EMISSION (ppm dry)
1.61 inch dia., eductor air only	1.61	0.16	0.65	1.42	98.7	0.45	21
	4.17	0.08	0.39	1.22	97.8	0.59	81
	5.86	0.09	0.36	1.10	96.3	0.58	156
1.05 inch dia., eductor air only	1.93	0.13	0.61	1.29	98.8	0.42	32
	3.86	0.09	0.41	1.23	97.8	0.51	114
	5.67	0.08	0.41	1.15	98.4	0.55	132
1.61 inch dia., extra aid added	3.93	0.15	0.54	1.21	99.4	0.55	23
	5.63	0.14	0.55	1.20	98.9	0.56	30

Stoichiometry in the reducing zone was also found to be a critical parameter for NOx formation and carbon burnout. A test was carried out in which the firing rate was maintained constant at about 6 MBtu/h, tailpipe exit stoichiometry was maintained at about 0.15, and total stoichiometry was maintained at about 1.20, while the primary zone stoichiometry was varied from 0.66 to 0.46. Results are plotted in Figure 2.3. It was found that NOx emission decreased with decreasing primary stoichiometry over the entire range tested, while CO concentration remained essentially constant at 20-30 ppm down to a primary stoichiometry of 0.53. As primary stoichiometry was decreased below 0.53, CO concentration increased and the boiler stack became noticeably dirtier. A probable explanation for this behavior is that the stoichiometry required for conversion of all carbon in the fuel to CO is about 0.58 (assuming all carbon as CO

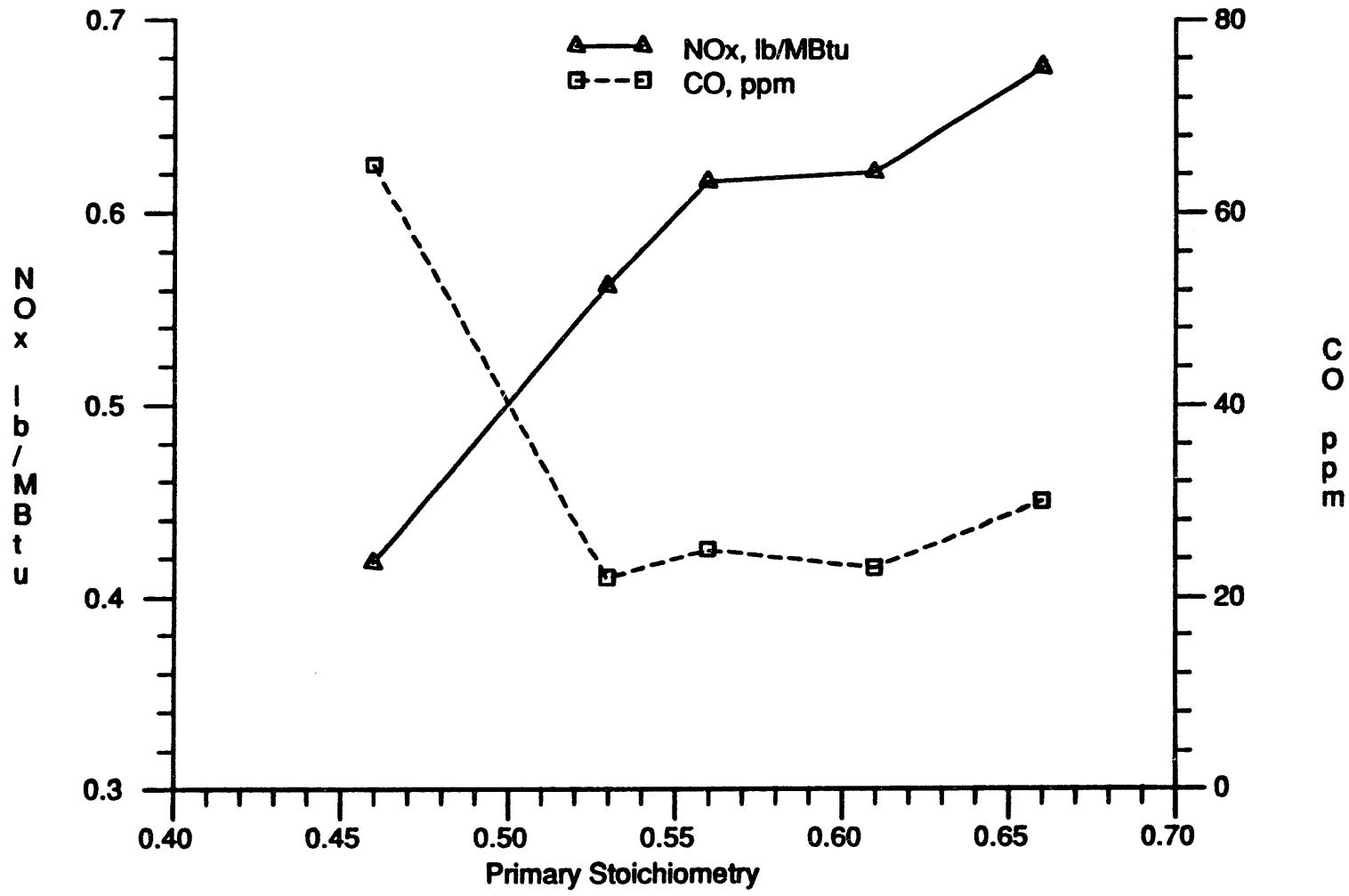

Figure 2.3 High Fire NO_x and CO vs. Primary Stoichiometry

and all hydrogen as H_2O). When the stoichiometry is reduced much below this value, a significant amount of char enters the secondary zone, where it is rapidly chilled and does not burn out completely.

As a result of the tests, it was determined that optimum combustor operation is achieved with a tailpipe exit stoichiometry of about 0.15 and a primary zone stoichiometry of about 0.55. During the next quarter, long term combustion testing will be carried out to determine if satisfactory combustor performance can be maintained for long periods of continuous operation.

Installation of Baghouse and Soot Blowers

During this quarter a baghouse was installed on the 200 hp boiler. The bag baghouse was manufactured by Aeropulse Co. and was originally purchased in 1976 for use in MHD studies. The baghouse contains 36 4-5/8 inch diameter x 10 ft long bags, providing approximately 436 sq ft of cloth area. A pulse jet cleaning system is employed to remove dust from the bags. The flue gas flow at a firing rate of 6 MBtu/h is approximately 1850 acfm, providing a maximum filtration velocity of about 4.2 ft/min. Filtration velocities of around 4 ft/min are typical for pulse-jet baghouse operations collecting fly ash. Based on discussions with bag vendors, a standard 16 oz woven fiberglass fabric with acid resistant finish was chosen for testing in the boiler system. Over 90 percent of coal fired boiler baghouses use this type of fabric, and the vendors did not feel that the unusually small particle size of the fly ash produced by combustion of micronized coal would present a problem for the standard fabric. Whether or not the standard fabric is adequate for the micronized coal combustion system will be determined during the 100 hour combustion test to be carried out next quarter.

The layout of the baghouse installation is shown in Figure 2.4. The baghouse inlet duct is connected to the side of the existing boiler stack. Dampers are used to direct the flue gas through the baghouse or bypass it to the stack. Rather than returning the cleaned flue gas to the existing stack, a new exit duct was constructed. This was necessary to avoid the possibility of dust leakage through the damper influencing the particulate measurements at the baghouse exit. (For example, if the baghouse collection efficiency is 99.9 percent, and the leakage rate through the damper is 1 percent, the amount of dust in the effluent due to leakage is ten times the amount escaping from the baghouse. For a commercial boiler system, it would be necessary to use a multiple damper system if very low emissions were required.) The baghouse will be bypassed during startups until the stack reaches operating temperature. Particulate samples representative of the material entering the baghouse will be obtained while the baghouse is bypassed, and baghouse outlet samples will be obtained at a new sample port in the exit duct. Ash from the baghouse will be collected in 55 gallon drums, weighed, and sampled for chemical analysis.

Soot blowers were also installed on the boiler during this quarter. The soot blowers consist of 1/4 inch o.d. x 0.035 inch wall stainless steel tubes which are inserted into the upstream end of each boiler tube in the second, third, and fourth passes. The soot-blower tubes in the second pass are type 310 stainless steel, as 310 ss has previously demonstrated good corrosion resistance in the fire tube exit area. The tubes on the other passes are type 316 ss, which is a more standard material. In order to install the soot blowers on the second and fourth passes, it was necessary to drill an individual hole for each tube through the boiler end bell and the refractory

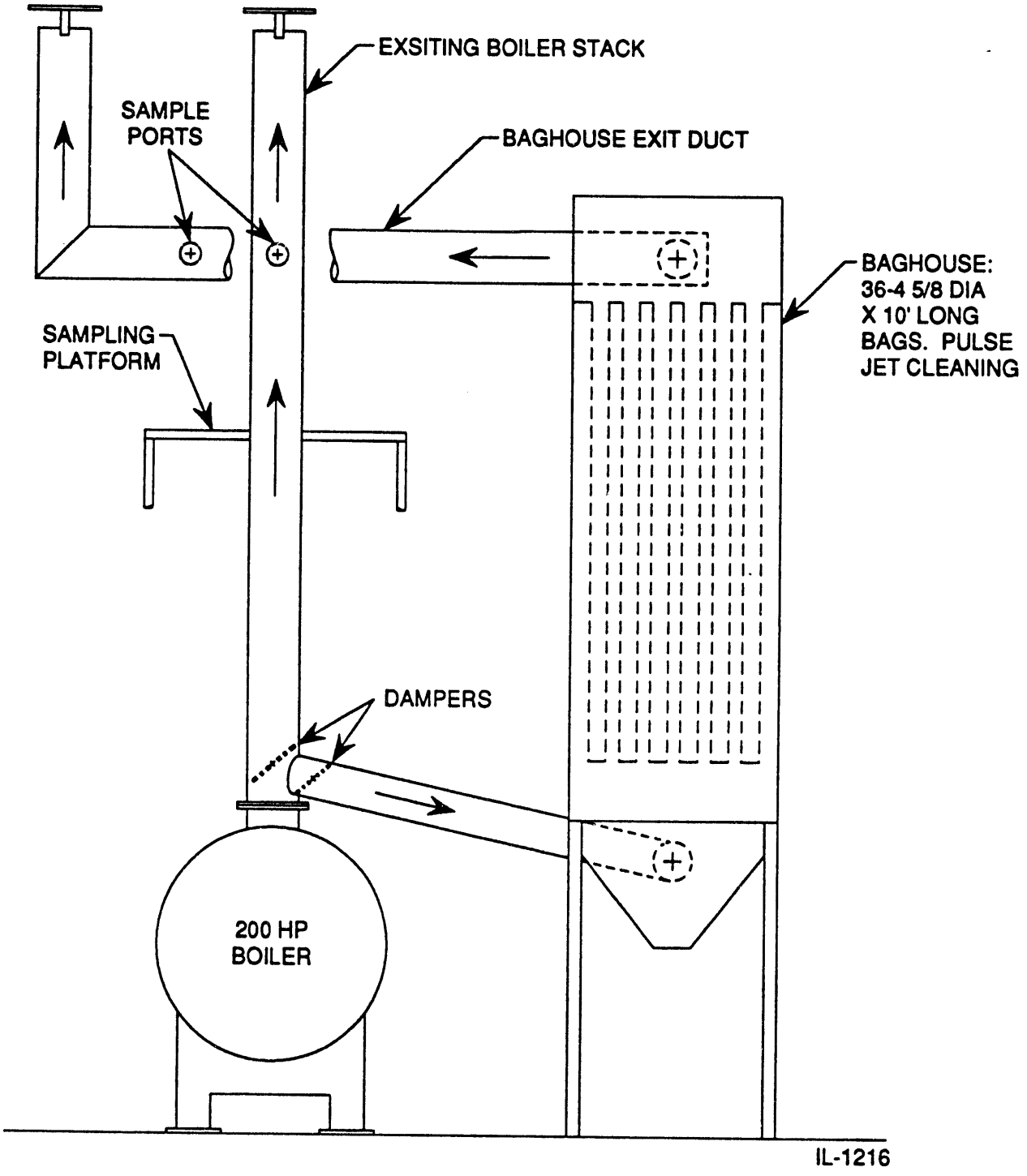

Figure 2.4 Baghouse Installation

inside, as there was no room for headers inside the boiler. The third pass installation was much simpler, as there was room for an internal header there. The soot blowers installation is shown in Figure 2.5. For a commercial retrofit, it would probably be more practical to fabricate a new, deeper end bell which would have internal soot blower headers installed in the shop. A deeper end bell would have an additional benefit if it turns out that removal of ash from the fire tube is required, as there would be more room for an ash discharge point. The second pass has 46 tubes; the third and fourth passes each have 30 tubes. The soot blower tubes are connected to three separate headers on the second pass, in groups of 16, 15, and 15. The third and fourth passes each have two separate headers, with 15 tubes per header. The soot blowing-medium is 120 psi nitrogen. (Although 120 psi nitrogen was available and used at the UTSI test site, a commercial-system application would use air.) During preliminary tests, the soot blowers appeared to do a good job removing dust from the tubes. The ability of the soot blowers to control ash buildup in the boiler will be evaluated during the upcoming 100 hour test.

2.1.2 Controls Development

During this quarter, testing of a photodiode-based flame detector system was conducted. A method of flame detection separate from the "Fire-eye" system originally supplied with the boiler is needed because the radiation emission from the pilot, propane, and coal flames vary widely, and the addition of a long refractory-lined burner section makes it difficult to separate emission from the flame from emission from hot refractory. A photodiode-based detector provides a voltage or current output signal that is easy to interface with the PC-based control system. The photodiode used

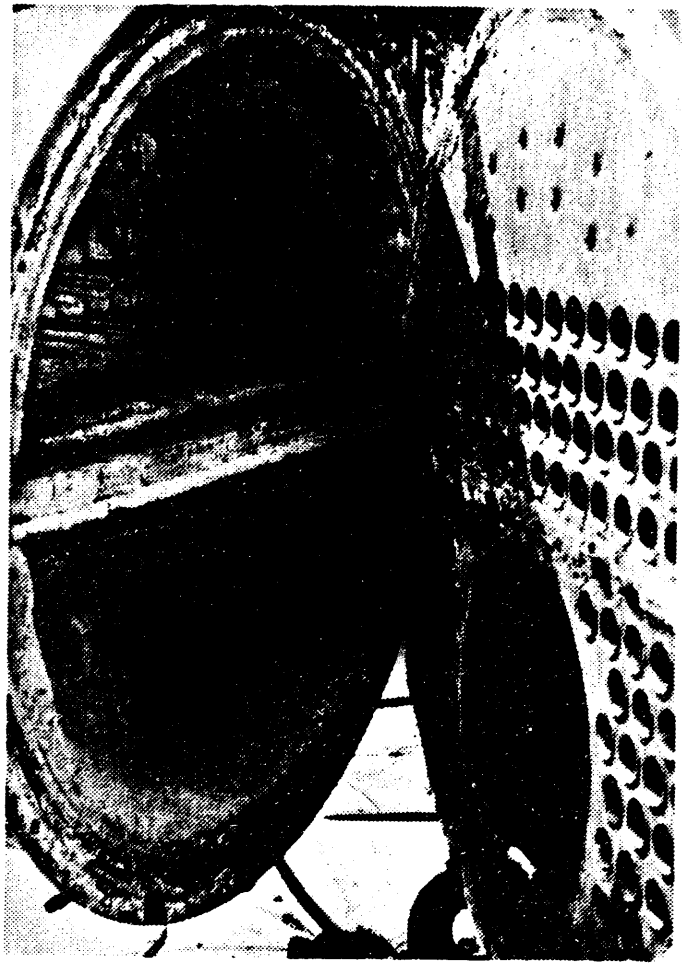

Second and Fourth Pass Installation

Third Pass Installation

Figure 2.5 Photos Showing Soot Blower Installation

in the system was Hamamatsu No. S1133. This photodiode is equipped with an IR-absorbing filter which makes it sensitive only to visible light in the range from 320 to 730 nm. The peak response is at 550 nm. During initial testing, it was found that the response due to emission from the hot refractory after an interruption in coal flow was comparable to response from the coal flame. An attempt was made to exclude the refractory from the field of view of the photodiode using a series of apertures. The apertures were successful in eliminating the response from the hot refractory, but the field of view was so narrow that the normal flicker in the flame caused the signal to be very erratic. A satisfactory solution was achieved by using an optical filter to filter out the emission from the refractory. The optical filter has a central wavelength of 506 nm and a half-peak bandwidth of 73 nm. The unfiltered and filtered response of the photodiode are plotted in Figure 2.6. Using the filtered arrangement, the photodiode signal consistently decreased by 75 percent within 2 seconds after a loss of flame. The signal level varied depending on the type of fuel being fired and the firing rate, so it would probably be desirable to program in different thresholds for shutdown for each situation. The threshold for shutdown might be chosen by the system-control computer as a percentage of the light-off signal level.

Work also continued during this quarter on development of a system for regulating combustion air flow using an automotive oxygen sensor. The oxygen sensor is a zirconium oxide model which was purchased at a local automotive parts store. The sensor has an built-in heater element which is powered by a 15 volt dc power supply. The oxygen sensor is mounted in the boiler stack, and is protected from contamination by coal ash by a filter constructed from Gore-tex laminated fiberglass

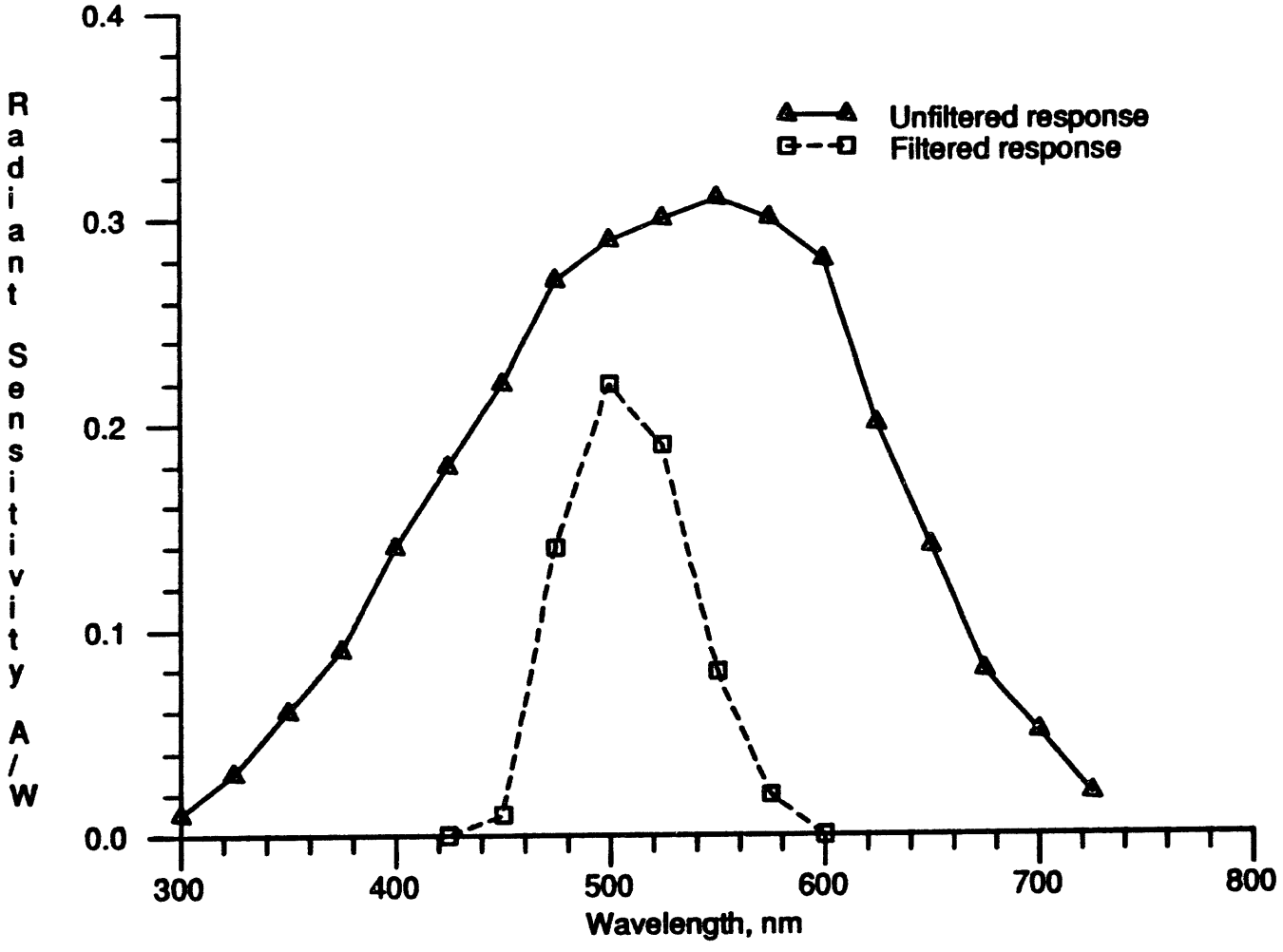

Figure 2.6 Spectral Response of Flame Detector Photodiode

cloth. The signal from the sensor is used in a control loop which varies the speed of the combustion air fan motor, thus regulating the combustion air supply to maintain a set oxygen concentration in the flue gas. The filter extends into the flowing gas stream, so the velocity pressure of the gas promotes flow across the filter. However, there is no provision for forcing gas flow across the filter, or for removing ash buildup from it. Plans called for addition of a system for periodically purging the filter to remove ash buildup if it fouled to the point that the sensor response was not adequate for control. Fortunately, there has been no problem with sensor response in tests conducted to date. One sensor was poisoned by condensation on the zirconium oxide element between tests, but this problem was eliminated by leaving the heater in the sensor turned on between tests. The response of the fan speed control loop was intentionally made fairly slow in order to avoid having the control loop respond to momentary disturbances in coal flow, but the system has performed well in maintaining a set oxygen concentration during gradual load changes. The system promises to be an effective replacement for the mechanical damper adjustment system typically employed for regulating combustion air flow in fire tube boilers, and is very cost effective since the pressure drop across the damper is eliminated.

2.1.3 Preparations for 100 Hour Combustion Test

During this quarter, coal for the upcoming 100 hour combustion test was transferred from 55 gallon drums into bulk bags. A total of approximately 29,600 lbs of Upper Elkhorn No. 3 coal with nominal 2.6 percent ash content (UE3-195) was loaded into 17 bags. This is all of the low ash UE3 coal we have left. Two of these bags will be dumped into the coal hopper at approximately 12 hour intervals during the test. Coal

will be loaded without interrupting coal flow to the burner. The test plan for the 100 hour test was also developed during this quarter. The available coal supply allows for an average coal flow rate of 296 lb/hour, for an average firing rate of 4.35 MBtu/h. The boiler will be operated at firing rates ranging from 4 to 6 MBtu/h during the test, with gradual changes in firing rate to simulate operation of a typical boiler installation under load demand. The goal for the test is to operate continuously for 100 hours firing coal. Reliability of the various system components will be evaluated, and the long-term ash deposition behavior will be determined. Carbon conversion efficiency will be determined from the ash collected by the baghouse, and gas analyzers will be operated continuously during the test to evaluate NOx and CO emissions.

2.1.4 Commercialization Effort

Commercialization efforts continued during this quarter, with a visit to UTSI on May 1, 1991 by Mr. Charles W. Ebbert, Product Manager for Rotary Kiln Thermal Processing of Cleaver-Brooks Boiler Co., and Mr. James C. Oakley, Executive Vice President of Boiler Supply Company, the local distributor for Cleaver-Brooks boilers. **A presentation giving an overview of the project and a performance demonstration of the boiler system were provided for these visitors. It was very well received.** Discussions were held concerning possible commercial application of the retrofit system by Cleaver-Brooks. Mr. Ebbert will present the information gained during his visit to Cleaver-Brooks' upper management, and said that a decision on whether or not to pursue commercialization of the system would depend on a determination of whether or not a reasonable chance exists that there will be a market for small scale coal-fired boilers within the next 10 years.

2.2 Task 4 - Project Management and Reporting

The March, April, and May 1991 monthly reports and the October-December 1990 quarterly report were issued. Material was prepared for presentation at the July Contractors Review Conference.

3.0 WORK PLANNED FOR JULY-SEPTEMBER 1991

During the next quarter, the 100-hour long-duration combustion test will be conducted. Data from the test will be reduced and analyzed, and work will begin on the Phase II final report.

END

DATE FILMED

3/10/94