High Temperature Condensed Phase Mass Spectrometric Analysis

G.F. Kessinger, D.A. Dahl,

J.E. Olson and J.E. Delmore

April 2000

Objective

- ***Design and construct a mass spectrometer for analysis of high temperature materials***
- ***Use this instrument to develop techniques for analysis of waste form materials***

HLW Analytical Needs

- ***Detect volatile species evolving from heated calcine as a function of temperature***
- ***Detect volatile species evolving from frit-calcine mixtures as a function of temperature***
- ***Identify chemical species present on the surface of calcine at as a function of temperature***
- ***Identify chemical species present in the surface of glass melts as a function of temperature***

Analysis of Materials at High Temperatures

- ***Allow analysis of materials at temperatures ranging from room up to 1750°C***
- ***EI (Electron Impact Ionization) of gas phase neutrals***
- ***Static SIMS of surface species***
- ***Dynamic SIMS of bulk species***
- ***Surface ionization of surface species***
- ***Positive and negative ion measurement***
- ***Rapid interlacing of these analysis modes***
- ***All analyses on the same sample***

Instrumental Features

- ***Miniaturized sample mount: samples masses on the order of milligrams***
- ***High temperatures: up to 1750 Celsius***
- ***Ultrahigh vacuum***
- ***Ion milling***
- ***Single mass analyzer: Extrel quadrupole mass analyzer***
- ***Multiple ionization modes***

Sample Containment

- ***Sample sits either on a filament, or is packed into a tube, that can be heated with an electric current and the potential biased with a power supply***
- ***The surface to be analyzed sits at a position optimal for the transmission of ions from the surface into the quadrupole mass spectrometer***
- ***Mounted onto a 1" vacuum lock probe***
- ***Vacuum lock is 2 stage, with a mechanical pump on the first stage, and a turbo pump on the second***
- ***An optical pyrometer measures elevated temperatures***
- ***A thermocouple can be inserted into the rear of the tube for measuring lower temperatures***

Ion Source

- ***The ion source surrounds the sample***
- ***The lens voltages are adjusted to focus ions from either the sample surface or from the area in space just in front of the sample***
- ***The entire source was designed with SIMION 7.0 for interfacing to a set of 3/4" quadrupole rods***
- ***The EI filament is turned on to produce ions from gas phase neutrals, off when analyzing ions originating from the surface***

Ionization Modes

- ***Electron impact ionization of neutral vapor species: positive ions***
- ***Thermal (surface) ionization: positive and negative gas phase ions***
- ***Secondary ion mass spectrometry (SIMS): positive and negative secondary ions***
- ***Electron impact ionization of SIMS neutrals: positive ions***

Electron Impact Mode

- *A hot filament surrounds the sample*
- *Electrons are emitted from this filament, and converge at a region in space just in front of the heated sample*
- *Permanent gases are ionized, along with condensable vapors*
- *Condensable vapors are ionized immediately following volatilization, prior to coming to a surface on which they can condense*
- *Sensitivity is much higher than anticipated*
- *Combined with the dynamic SIMS gun, it is anticipated that analysis of sputtered neutrals will be feasible*

Static SIMS Mode

- ***Perrhenate Anion (ReO_4^-) Gun, 0.1 to 1 nanoampere***
- ***Focuses onto the sample***
- ***Sample charging of insulating samples controlled by leakage ring technology***
- ***Secondary Ions sputtered from surface that are indicative of the atomic and molecular species present on the surface of the sample***
- ***Beam intensity is sufficiently low that the surface is not changed appreciably over the course of the measurement***

Dynamic SIMS

- ***Argon sputter ion gun with currents up to a few mA***
- ***Erodes surface at significant rate***
- ***Cleans surface***
- ***Both ions and neutrals are sputtered with high abundance***
- ***Useful for bulk elemental analysis***
- ***Ions are analyzed with high sensitivity***
- ***Substantial bias in favor of easily ionized elements***

Sputtered Neutrals

- ***The dynamic SIMS gun sputters substantial quantities of neutrals into the gas phase with minimal matrix effects***
- ***Ionization biases are much less with EI that from any process producing ions directly from the surface, so that the sputtered neutrals are more representative of the ratio of elements present in the bulk***
- ***Ionizing these neutrals with EI (sputtered neutrals) provides an elemental analysis with minimal matrix and ionization bias***

High Temperature SIMS Instrument

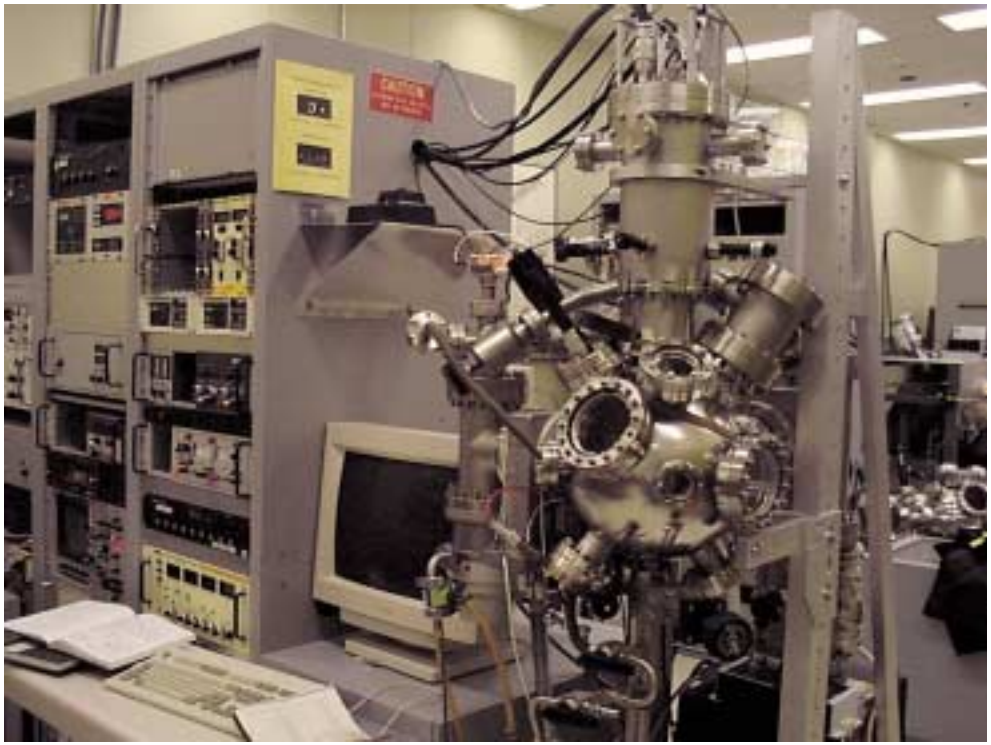

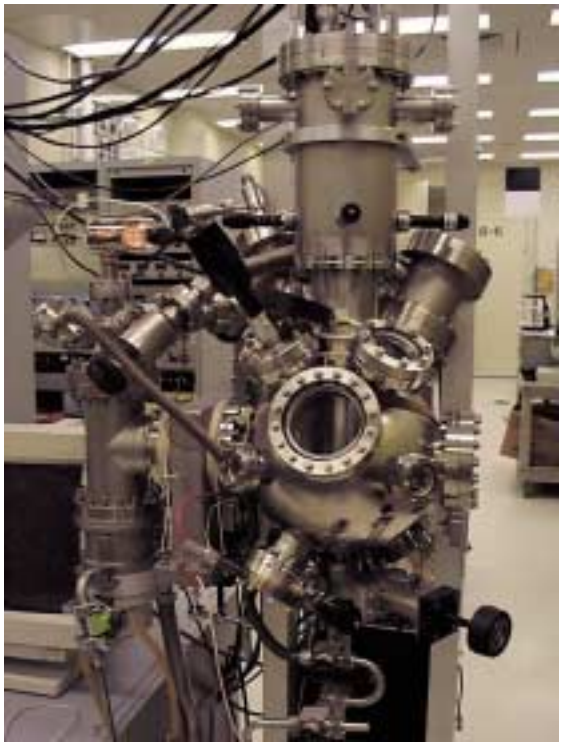

Electrode Stack

Ion Optics and E.I. Source

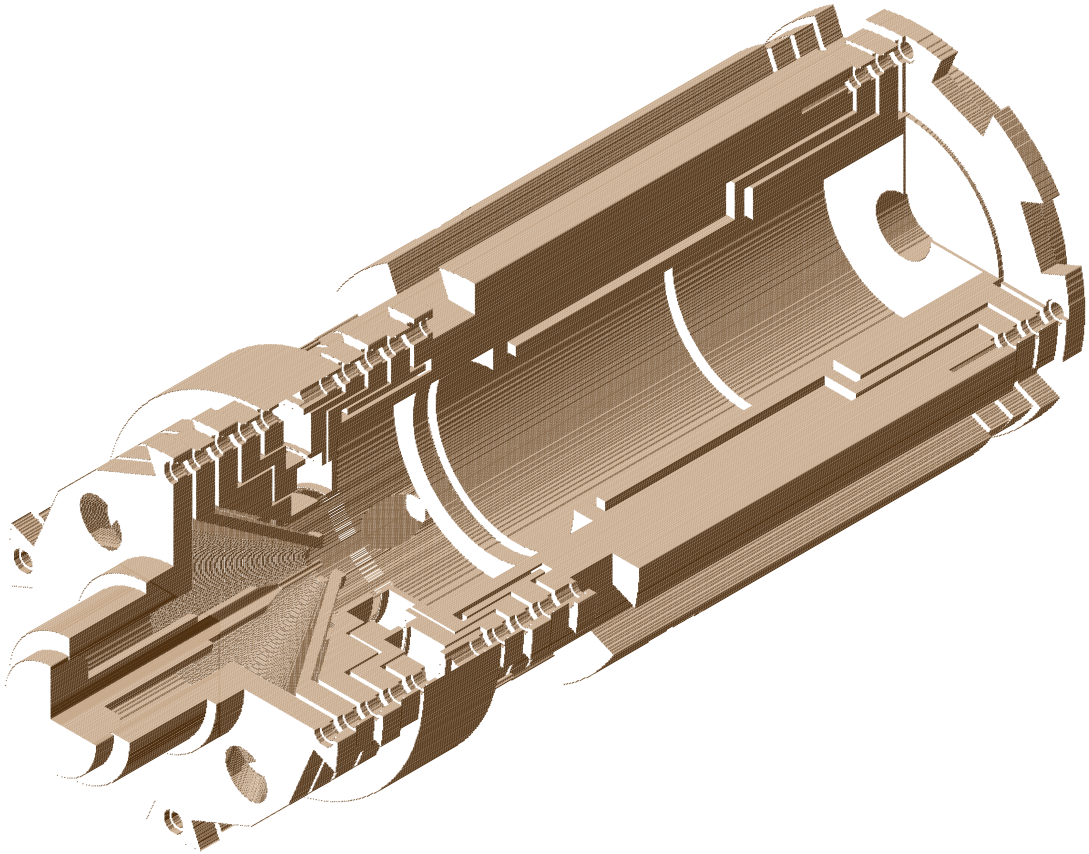

SIMION-computed Ion Trajectories

E.I. Ions

SIMS Ions

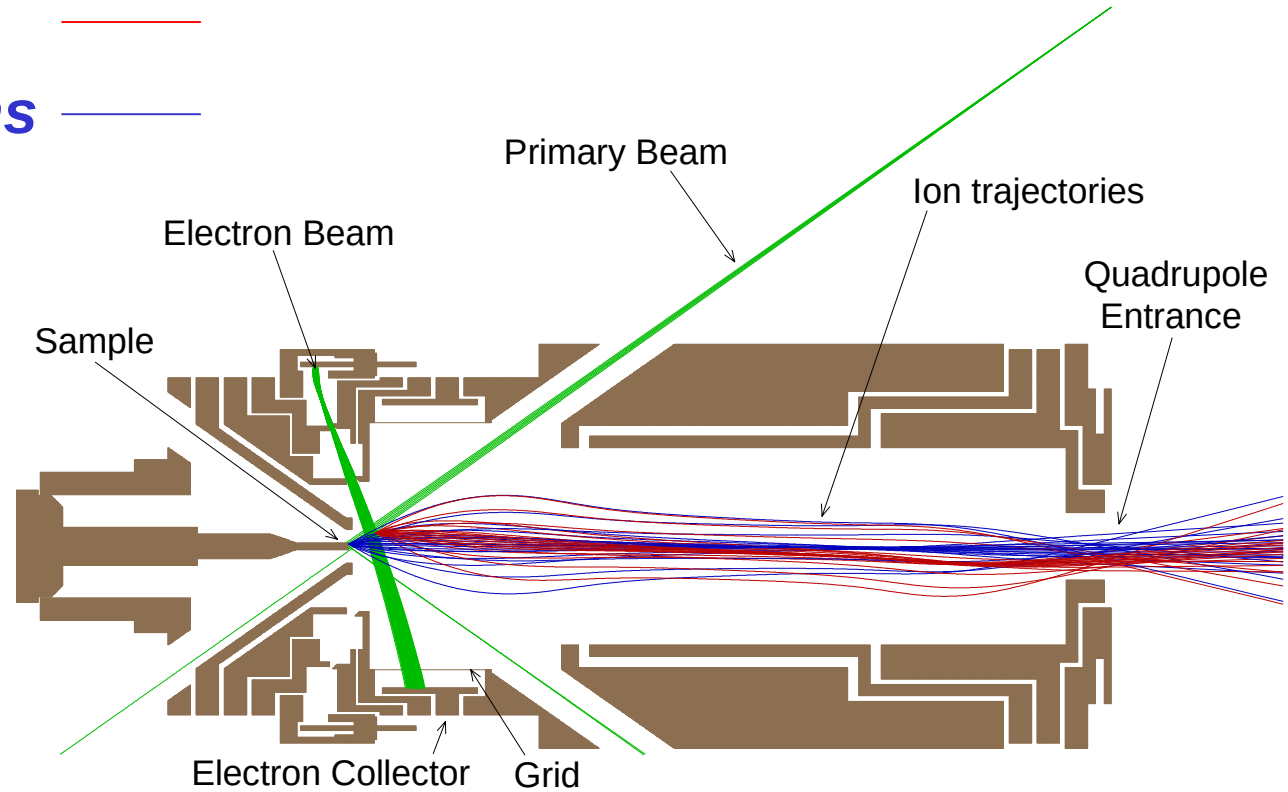

Electron Gun/E.I. Source Region

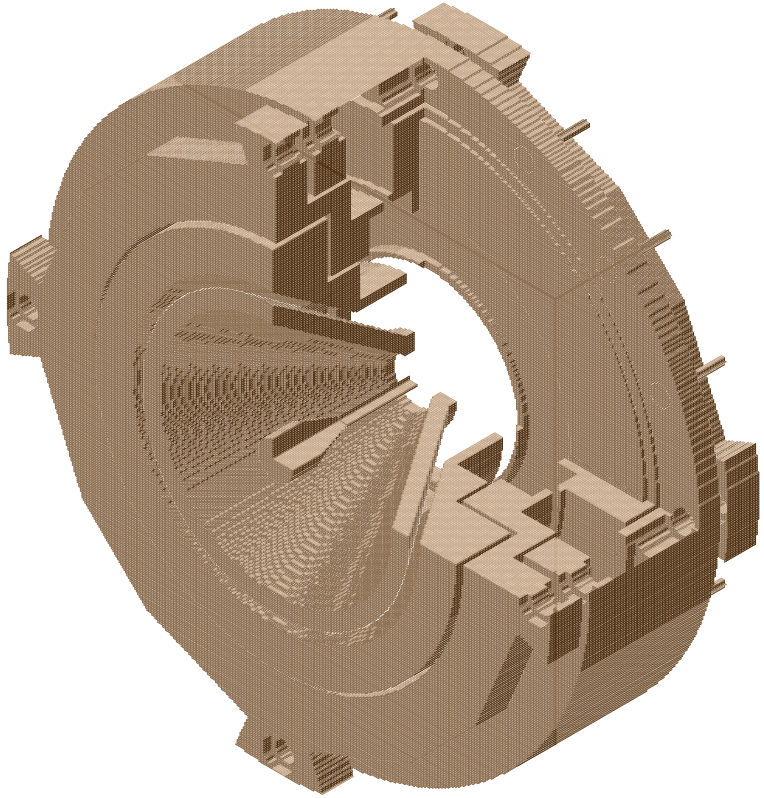

Electron Gun and Ion Source Region Potential Energy Surface

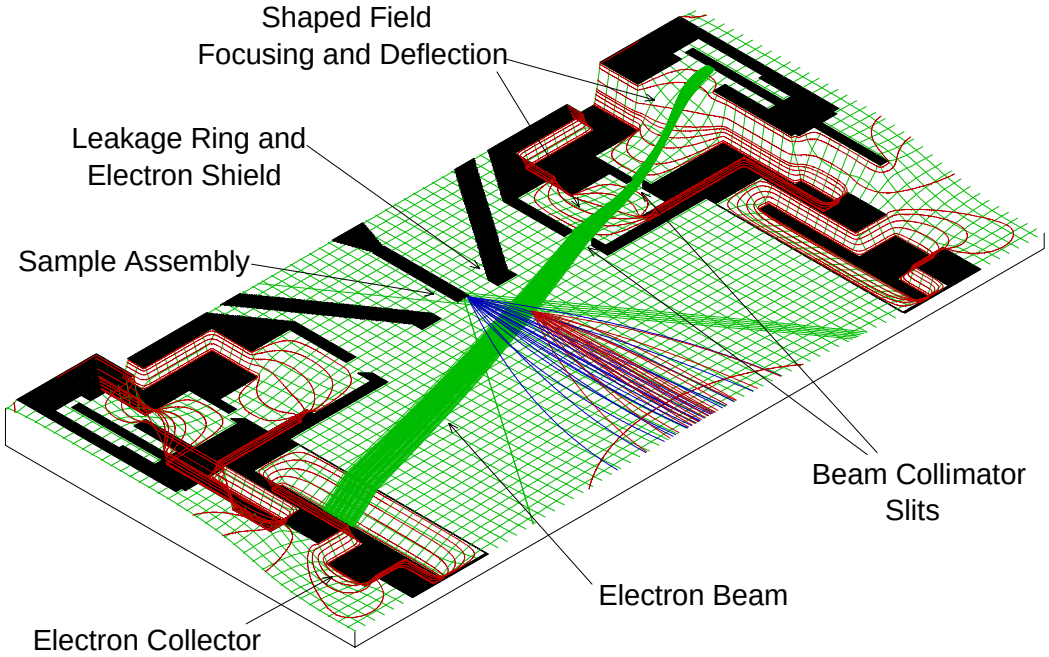

Background E.I. Spectra Before Bake-out

- *Re tube*
- *T ~ ambient*

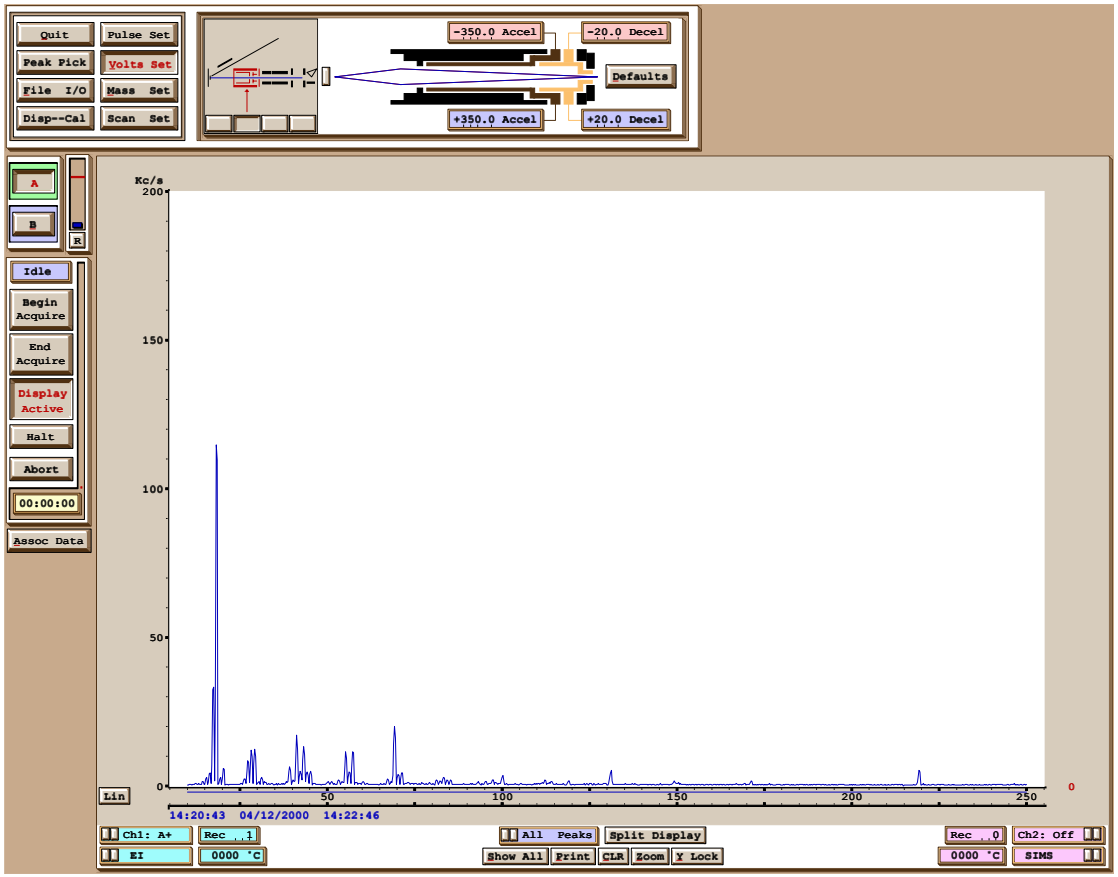

High Temperature E.I. Spectra

- ***Re tube***
- ***T ~ 1090 Celsius***

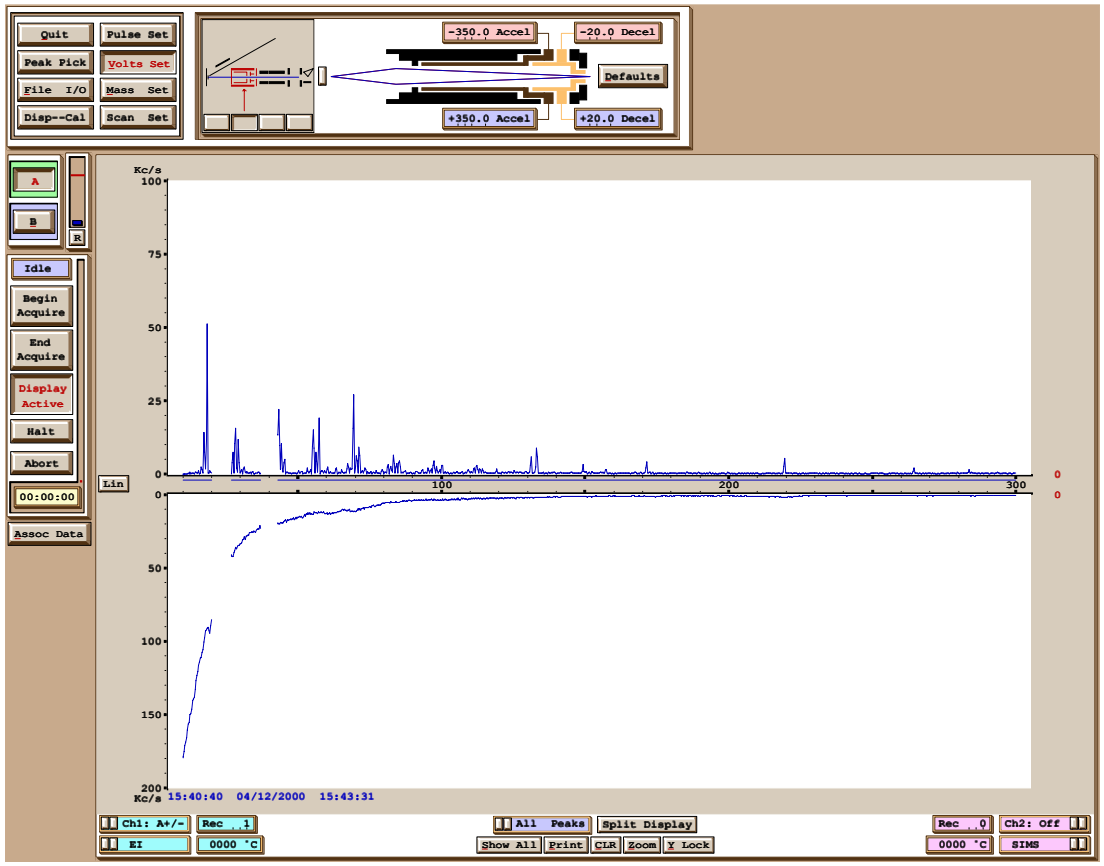

High Temperature SIMS Spectra

- *Re tube*
- *T ~ 1090 Celsius*

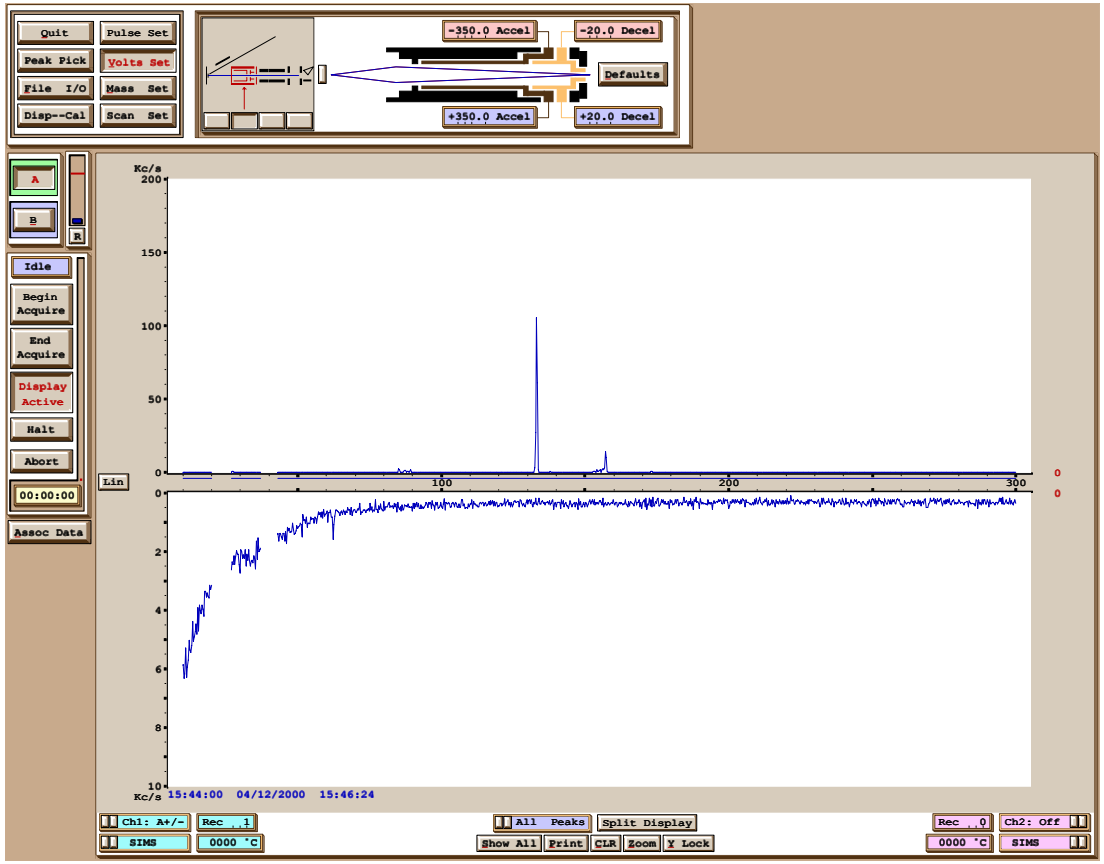

Current Status of Instrument

- ***Sample insertion and temperature control operational***
- ***EI, surface ionization and Static SIMS modes are operational under computer control***
- ***Dynamic SIMS and Sputtered neutrals under development***
- ***Programming for sequencing between operational modes and automated data storage under development***

Automated Data Collection

- *Computer system controls the mass spectrometer and all associated focusing lenses*
- *Data bank for storing focusing conditions for each different ionization mode*
- *Additional data banks for storing data*
- *System will sequence between focusing modes and store data*
- *Final configuration for data storage as related to temperature profiles still being developed*

Operating Temperatures

- ***Filaments have been operated up to 1750 °C***
- ***The limits on operating temperature of filaments are the volatility and reactivity of the sample with the filament material, and strength of the filament at operating temperature.***
- ***Tubes have been operated at temperatures up to 1500°C***
- ***The limits on operating temperatures of tubes seems to be a function of the samples reactivity and volatility, and the strength of the supporting filament material***

Projected Application - HLW Characterization

- ***INEEL high level waste has unique chemical composition as compared to other DOE HLW: high in Ca^{2+}, F^{-} and NO_3^{-}***
- ***INEEL HLW has unique physical character: interim multi-phase composite waste form (calcine) of refractory materials and low-melting materials***
- ***The high temperature behavior of calcined HLW is poorly understood***
- ***Analytical techniques for characterizing the high temperature chemistry of HLW calcine are needed to support process development activities***

Types of Analyses

- ***Study of evolved gases as a function of time, temperature and reaction chemistry***
- ***Study of the emission of condensable vapor species by ionizing prior to reaching a cool surface on which they can condense, as a function of time and temperature***
- ***Study of atomic and molecular species present on the surface as a function of time, temperature and reaction chemistry***
- ***Study of the chemical species present in the bulk sample and how they change as a function of time, temperature and reaction chemistry***

Understanding Chemical Reactions

- ***Are the volatilizing species attributable to the known chemistry of the material?***
- ***In what sequence are the reactions occurring, and at what temperatures?***
- ***Can analysis of the surface and bulk properties detect reaction parameters in such a way as to offer new insights into the reaction chemistry?***
- ***Are the surface species the same as the bulk species?***
- ***Are phase transitions occurring with temperature variation and is a distinct phase building up on the surface?***

Chemical Implications of Heating Rates

- *Is fast or slow heating preferable for producing a glass or ceramic material?*
- *Will complete degassing of the components prior to heating to full reaction temperature produce a more desirable product?*
- *How does this affect the final product?*
- *What is the optimum temperature ramp?*
- *What are the intermediate products and what is the reaction chemistry that might effect the final product?*