High Fluence Neutron Source for Nondestructive Characterization of Nuclear Materials

54571

Mark M. Pickrell, NIS-5
Richard Nebel, T-15

- Purpose and objectives.
- Physics basis and logic.
- Status and work completed.

Purpose and Background

- Develop a safe, long lifetime, very high output neutron source.
- Use for "hard to measure" nuclear materials.
- Substantial improvement from present sources.
- Modest size, weight, cost. Power ~ 5kW

*Table 1: Present and Target Operating Parameters for **Small** Neutron Generators*

Parameter	Present	IEC Target or Already Proven
Neutron Yield (n/s)	10^8	10^{11}
Lifetime (hours)	500	10,000
Operation	Pulsed	Pulsed or steady state
Nominal cost $k	$100k	Same
Power	1kW	10kW

IEC: LANL Approach and Objectives

- Objective:
  - 10^{11} n/s. Factor of 10^3 improvement.
  - 10,000 hour lifetime.
  - Less than 10kW power consumption.
  - 6 inch diameter sphere.
  - 1 rack of control / power electronics.
  - < $150k.
- Neutron source: ***turn it off.***
  - Limit personnel dose.
- Long lifetime from plasma target.
- Basic physics very well established.

IEC Source

- Inertial Electrostatically Confined Plasma.
- Plasma Accelerator. D-T process.
  - Central plasma focus.
- Long Lifetime
  - Plasma target-not hard target:
  - Existing experimental lifetime 10,000 hours.
- Developed by Hirsch in the 1950s.
  - Achieved 2×10^{10} n/s. 10kw, Desktop experiment.
  - Subsequently studied at LANL, INEL, and University of Illinois.

IEC Description

- The IEC device is a spherical vacuum chamber that accelerates ions into the center.

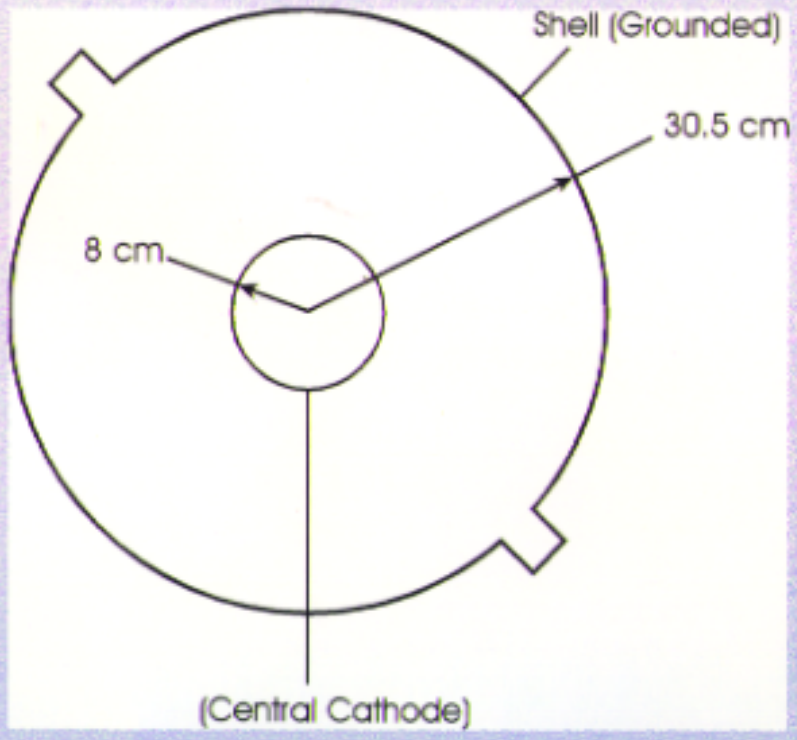

Single Grid

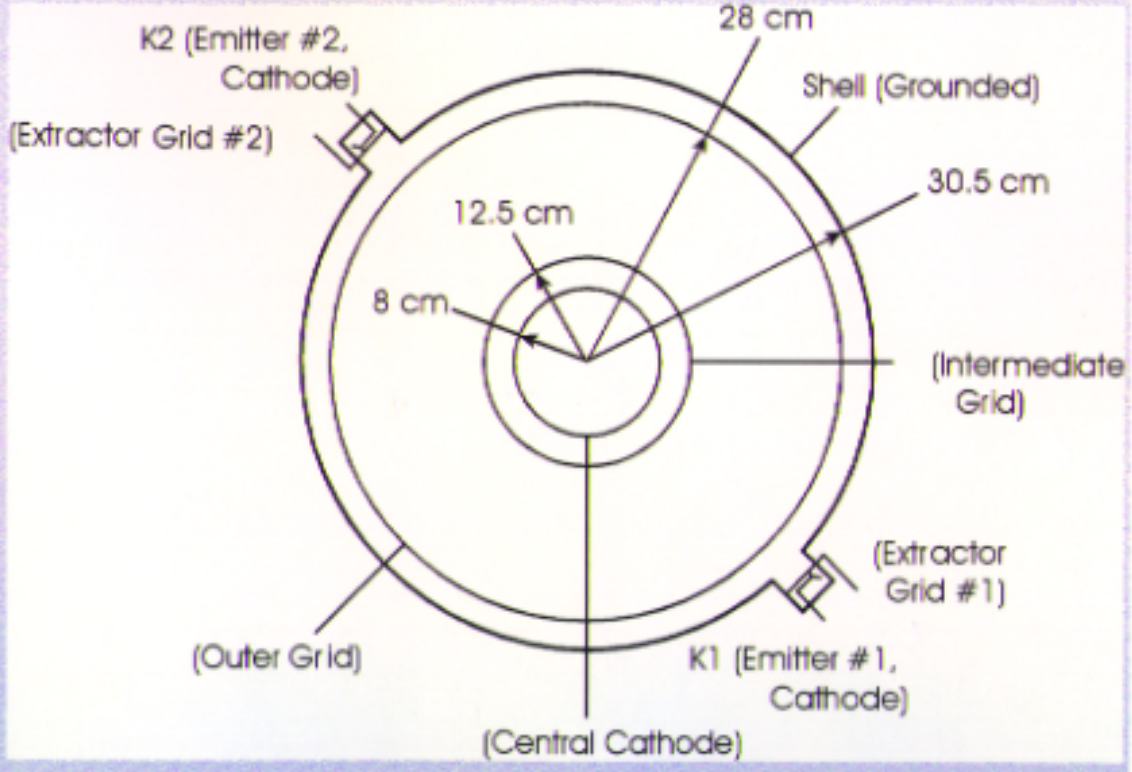

New LANL Triple Grid

IEC Physics

- Low density increases neutron output:
  - D-T fusion reaction cross section depends on energy. High energy increases yield.
  - Low density allows particles to collide at the center (beam - beam) rather than with background (beam - background).
  - Low density allows particles to reach full accelerating potential: one collision at center rather than many.
  - Somewhat counter-intuitive: reaction rate $\propto n^2$
- High density decreases yield also:
  - Do not achieve as tight a plasma focus.
  - Plasma shielding is greater.

Density Limit

- Density fixed by the Paschen breakdown curve, which relates density to electric field.
  - E/P is fixed for a normal (non arcing) breakdown.
  - Very high accelerating potential forces high density for single grid device.
  - Attempt at lower density causes arcing, not plasma

Triple Grid Lowers Density

- Triple grid allows a lower electric field at plasma source. (Paschen curve).
  - Inner grid: accelerating grid
  - Middle grid: ground, shielding grid
  - Outer grid: modest positive potential. Causes breakdown.
- Electrons injected to assist breakdown.
- Combination of electrons and low potential yield low density.
- After breakdown, ions drift across ground grid to feel full accelerating potential.
- Physics confirmed with a 1.5 dimensional, fully kinetic, plasma physics code with full atomic physics.

Single and Triple Grid Density Profiles

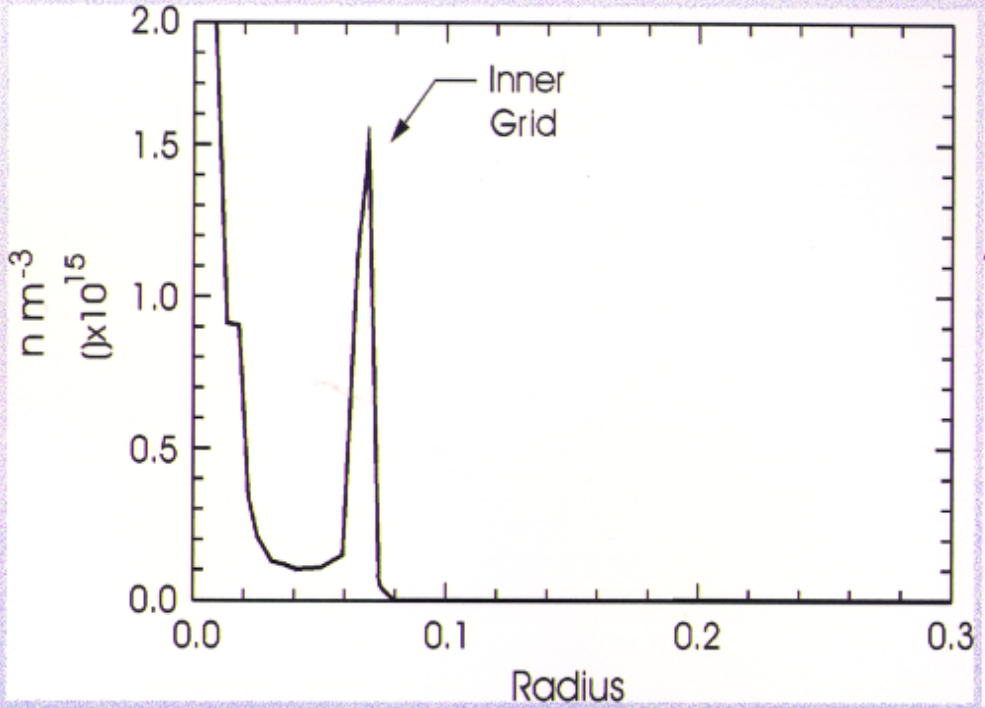

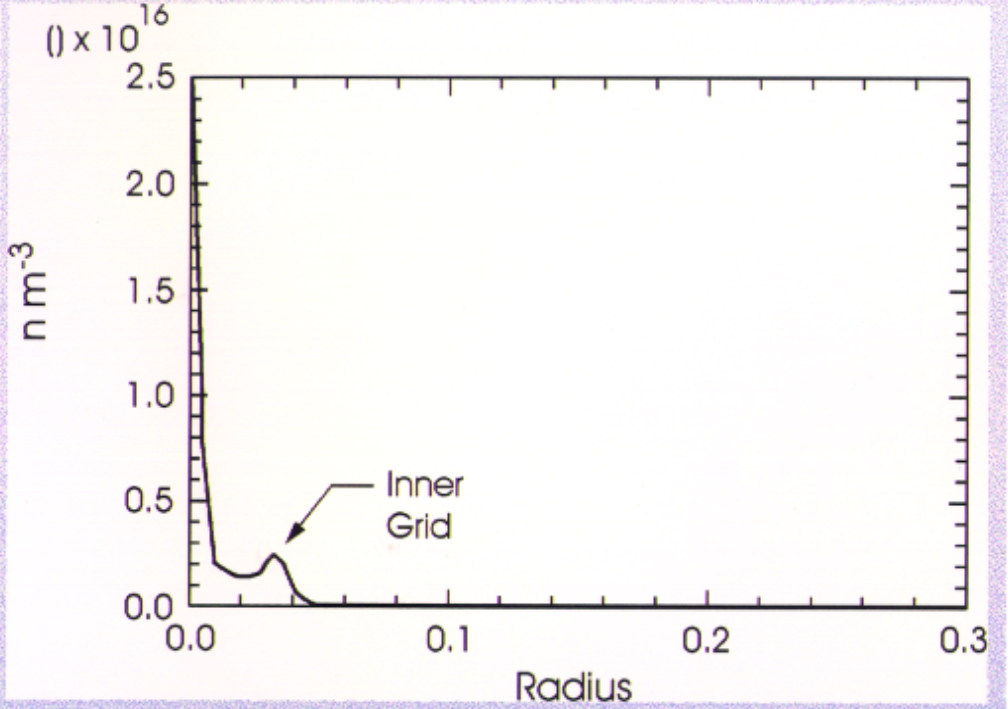

Single grid. Note density spike near grid.

Triple grid. Note that density scale is roughly x10 other plot. Note that density spike is gone.

Single and Triple Grid Potential Profiles

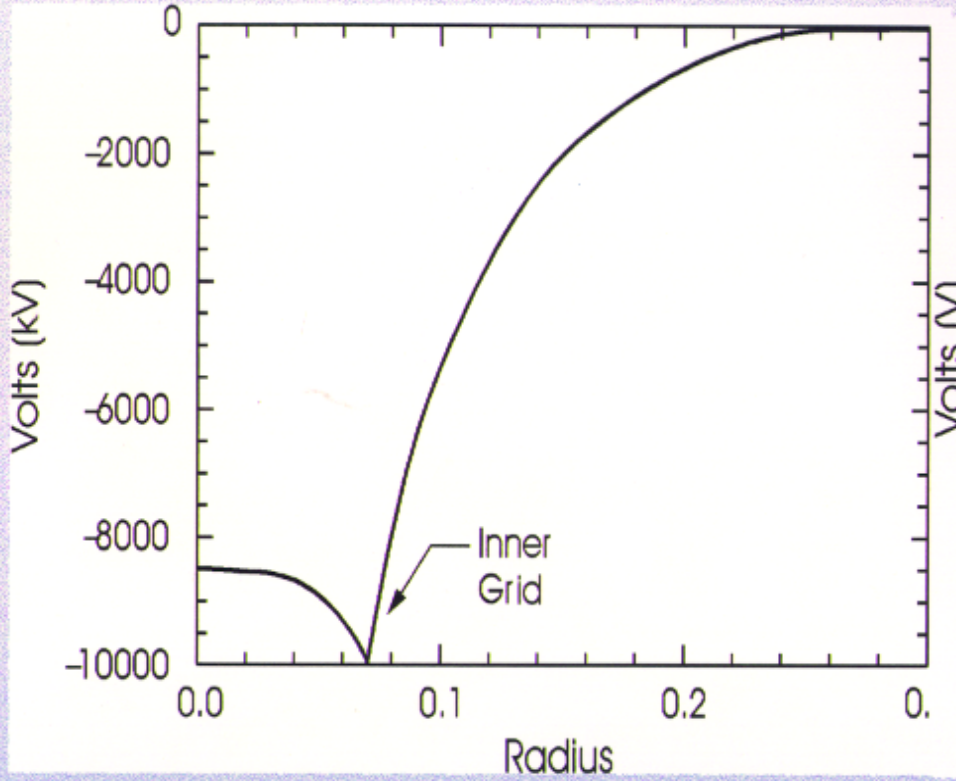

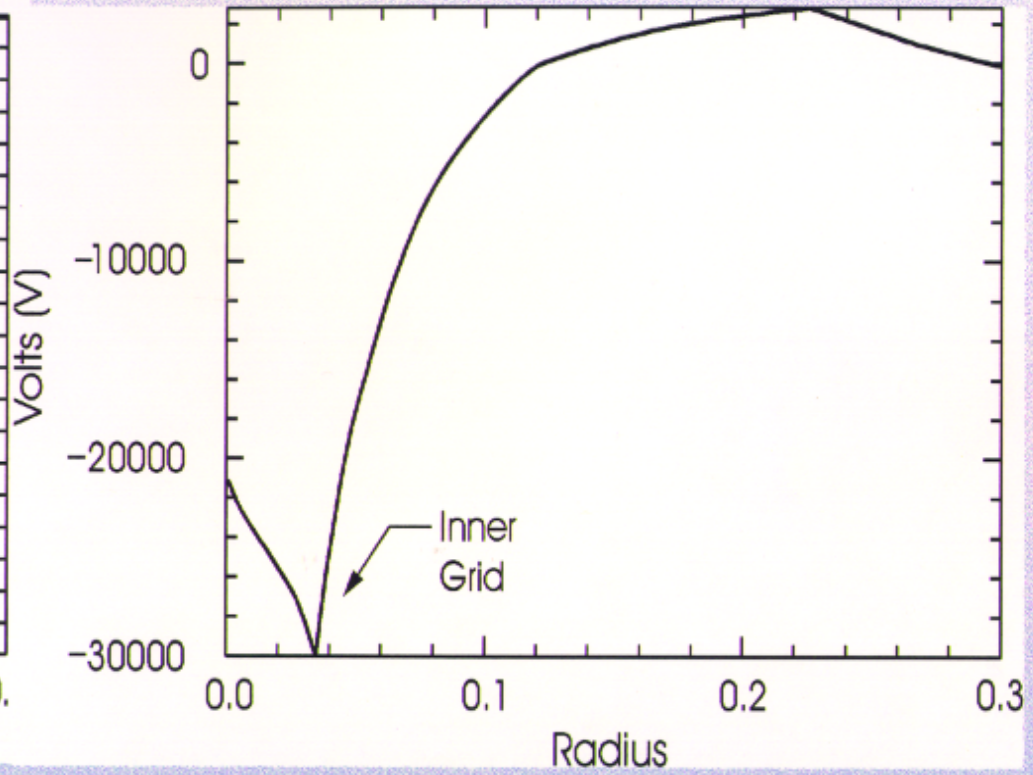

Single Grid

Triple Grid. Note potential well is 3 times deeper than single.

IEC Scaling.

- Hirsch results confirm density scaling.
- 3 Reasons to support triple grid design: to reduce density to increase yield:
  - Basic Scaling. Move to collisionless regime.
  - 1.5 D, fully kinetic transport code simulations.
  - Hirsch Results

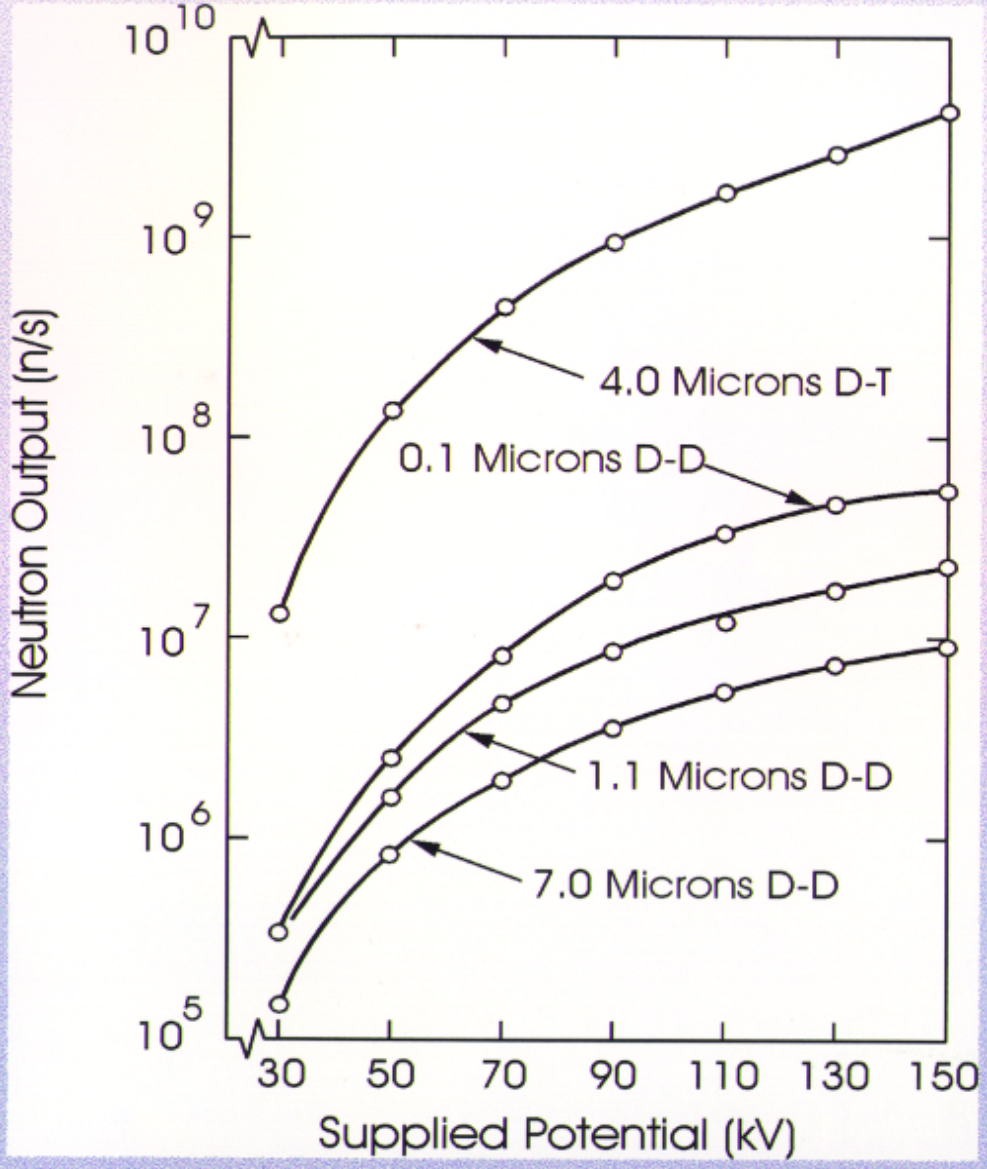

Vacuum Chamber in Hot Cell

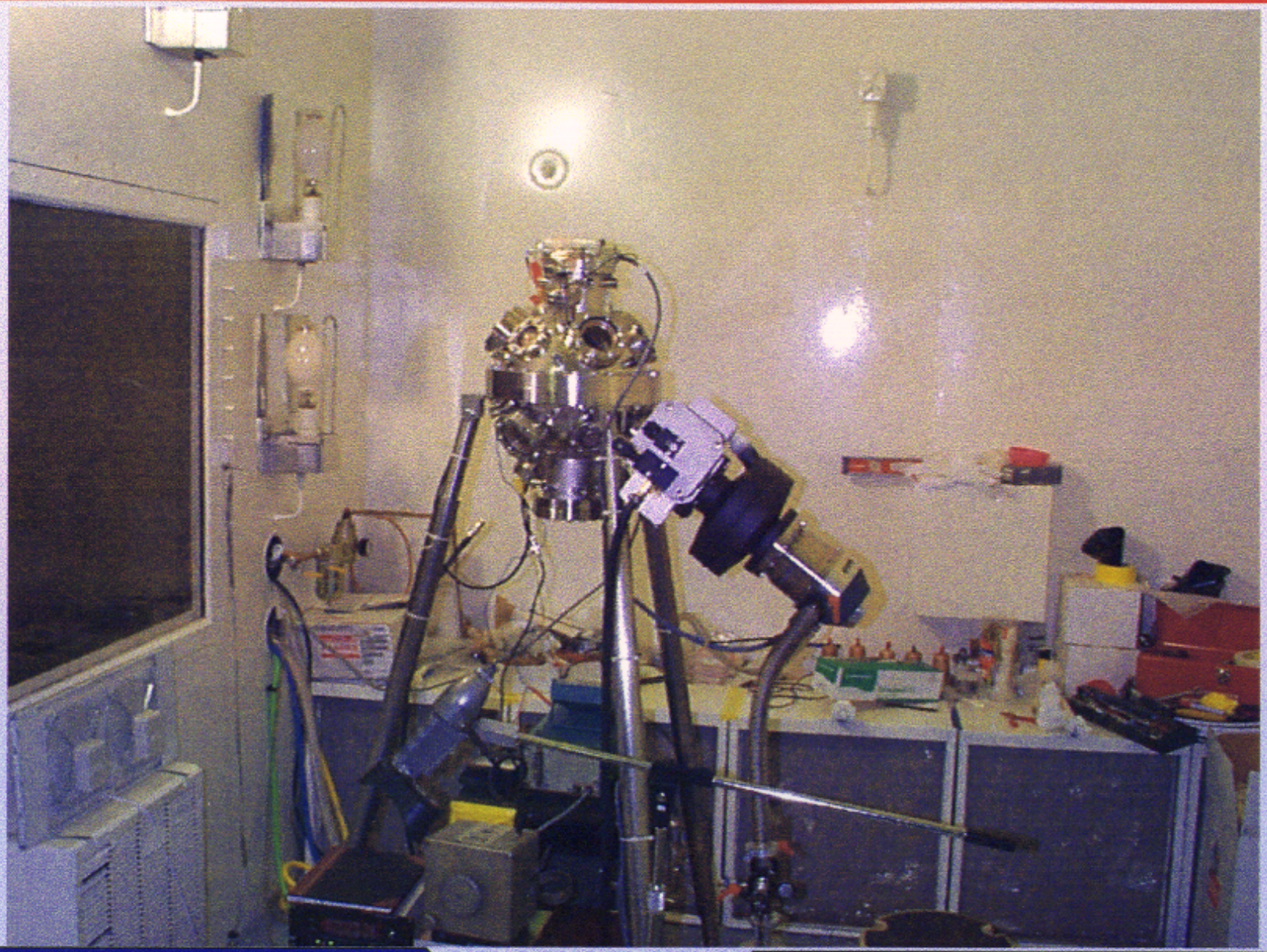

Vacuum Chamber Components

Power Systems

Power Systems

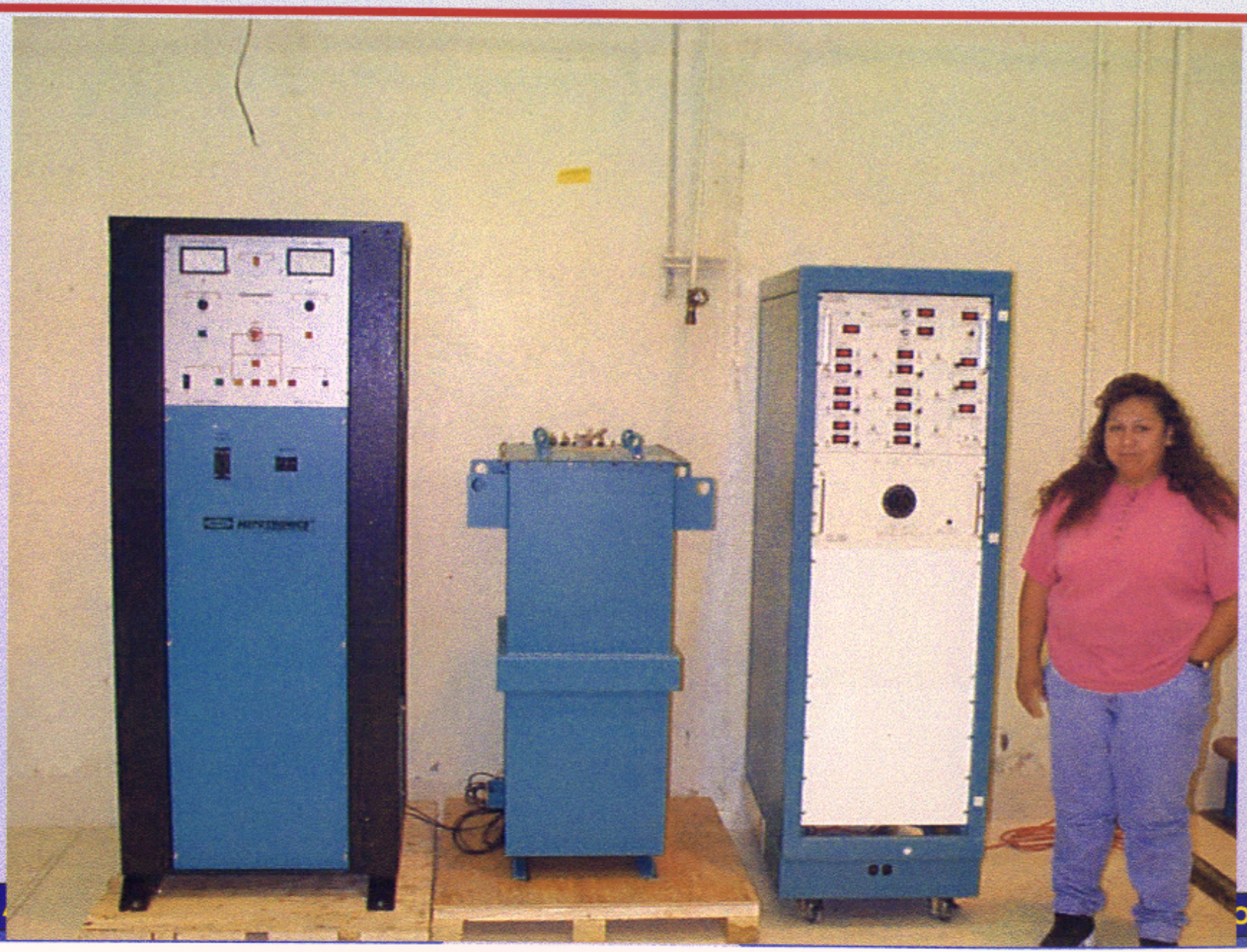

System Assembly Inside Hot Cell

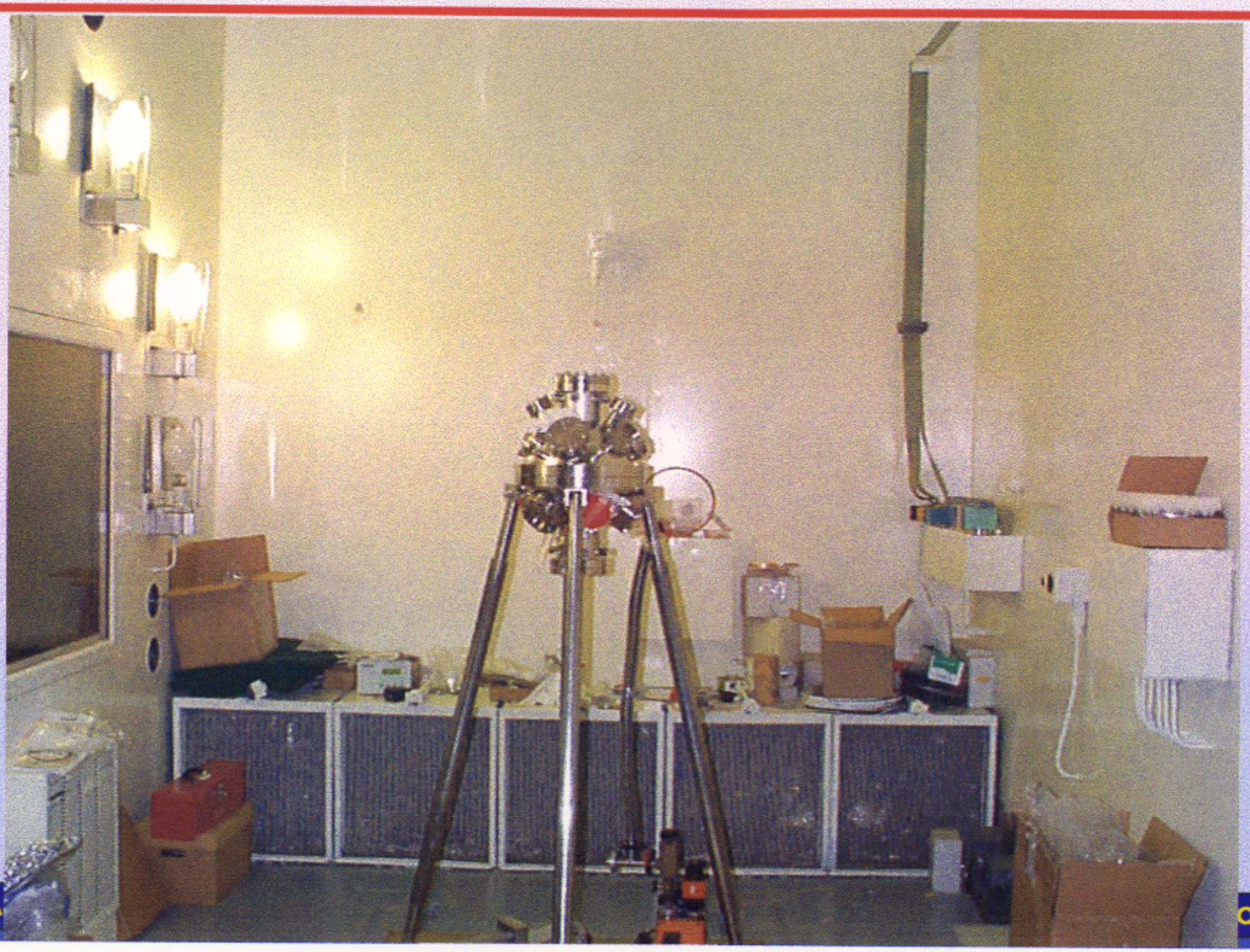

High Fluence Applications

- Brute force.
  - Leverage existing systems.
- Any application requiring measurement of material with a high background.
- Any application with highly shielding matrix.

- Immobilized material in glass.
- Fission product tagging.
- Spent fuel assay (fissile content).
- Remote handled transuranic waste (RH/TRU).
- Nuclear smuggling.
- Land Mine Detection

Immobilized Material in Glass

- Measure material for materials disposition.
- Pu immobilized in borosilicate glass
  - Shields and absorbs neutrons.
- Combined with fission products.
  - Spent fuel standard
  - Very high ambient radiation background (neutron and gamma).
- Use the high fluence source to:
  - Get signals above high background.
  - Provide sufficient interrogation to overcome absorption of glass matrix.

Fission Product Tagging

- Needed for arms control:
  - START III
  - Transparency
  - Pit accountability.
- Present system uses the LANL Godiva "burst mode" criticality system.
- Replace the Godiva with the IEC.

Landmine Consequences

Conceptual Approach

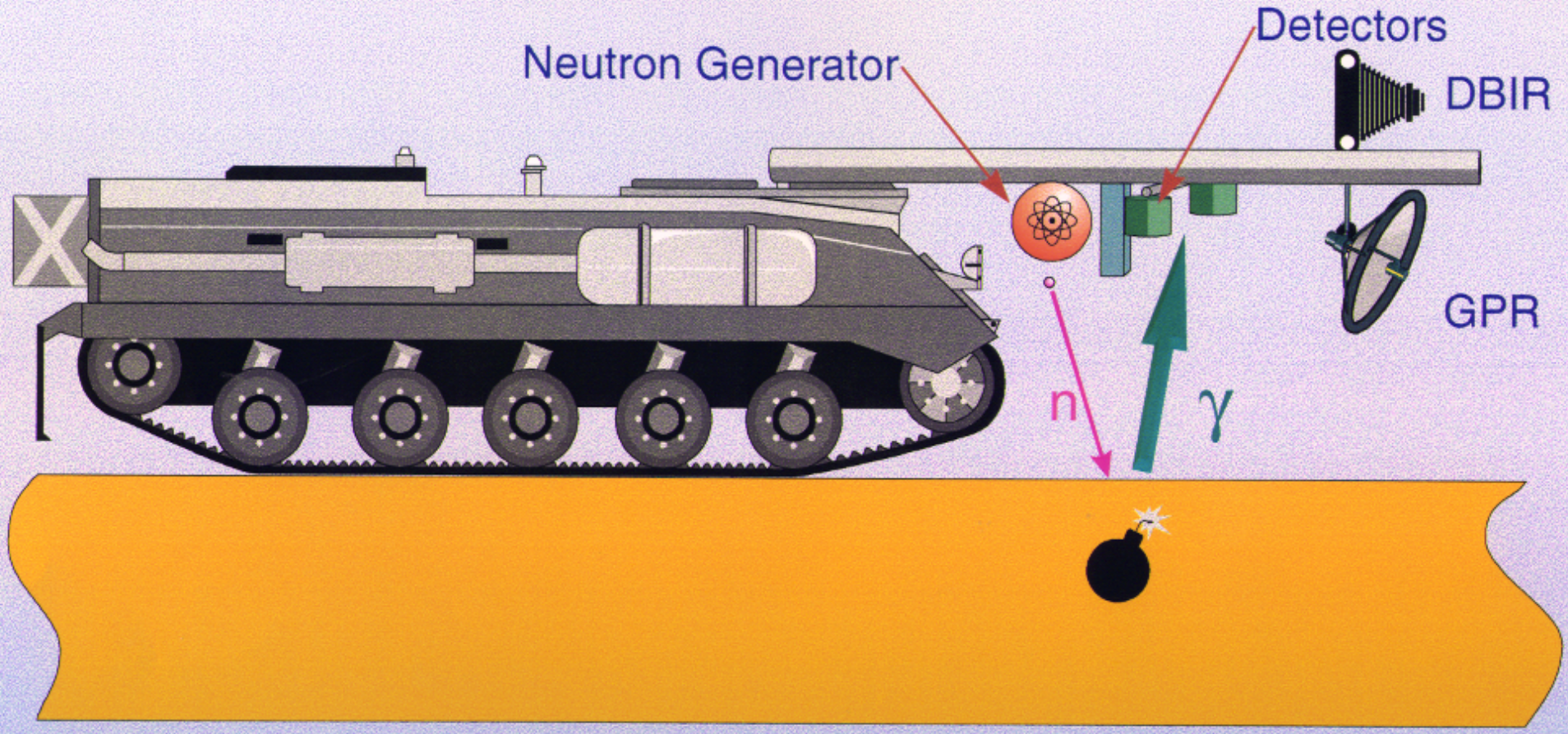

- Data Fusion Method: Recon, Screen, Contact
- Fast but inaccurate ==> modestly slow and accurate

Conclusions / Status

- On schedule.
- On budget.
- Requires commercial partner

Milestone	Date	Accomplishment	Status
1	4 mos	Procure all power supplies and vacuum equipment.	Done
2	8 mos	Execute CRADA agreement	Not Done.
3	8 mos	Complete construction of electrical systems.	Done
4	10 mos	Build vacuum chamber	Done
5	11 mos	Initiate experimental program	Done
6	16 mos	Complete initial experimental program.	Done
7	20 mos	Build second vacuum chamber.	Done.
8	26 mos	Complete second experimental program.	
9	30 mos	Complete industrial engineering design.	
10	32 mos	Complete technology transfer.	

Conclusions / Status

- On schedule.
- On budget.
- Completed