LBL-30785

Lawrence Berkeley Laboratory

UNIVERSITY OF CALIFORNIA

Physics Division

Presented at the 1991 Space Cryogenics Engineering Conference,
Huntsville, AL, June 11–14, 1991, and to
be published in the Proceedings

Measurements of Retractable Gas-Cooled 6061 Aluminum Electrical Leads Operating in a Vacuum

M.A. Green, H. Aguiar, M.J. Bensadoun, J.H. Gibson, D.L. Heine,
S. Levin, M. Limon, G.F. Smoot, and C. Witebsky

June 1991

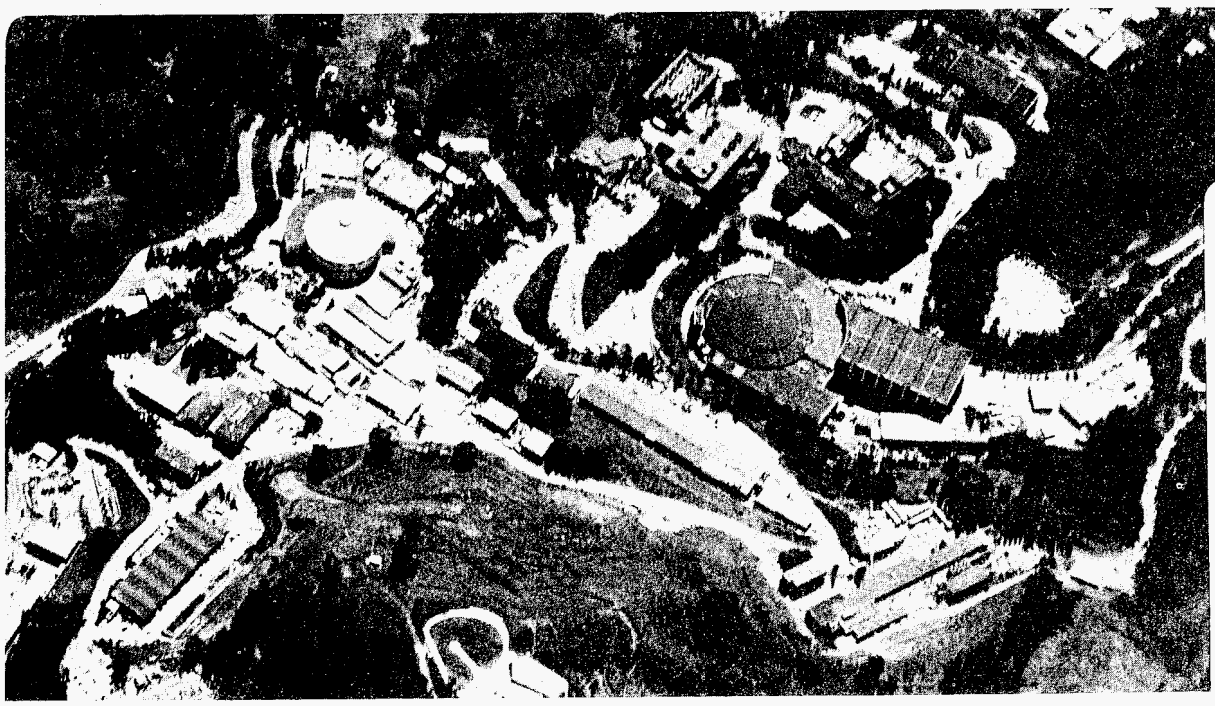

Prepared for the U.S. Department of Energy under Contract Number DE-AC03-76SF00098

LOAN COPY
Circulates
for 4 weeks
Bldg. 50 Library.
LBL-30785
Copy 2

DISCLAIMER

This document was prepared as an account of work sponsored by the United States Government. Neither the United States Government nor any agency thereof, nor The Regents of the University of California, nor any of their employees, makes any warranty, express or implied, or assumes any legal liability or responsibility for the accuracy, completeness, or usefulness of any information, apparatus, product, or process disclosed, or represents that its use would not infringe privately owned rights. Reference herein to any specific commercial product, process, or service by its trade name, trademark, manufacturer, or otherwise, does not necessarily constitute or imply its endorsement, recommendation, or favoring by the United States Government or any agency thereof, or The Regents of the University of California. The views and opinions of authors expressed herein do not necessarily state or reflect those of the United States Government or any agency thereof or The Regents of the University of California and shall not be used for advertising or product endorsement purposes.

Lawrence Berkeley Laboratory is an equal opportunity employer.

LBL-30785
ASTROMAG-035

MEASUREMENTS OF RETRACTABLE GAS-COOLED 6061 ALUMINUM ELECTRICAL LEADS OPERATING IN A VACUUM*

M. A. Green, H. Aguiar, M. J. Bensadoun, J. H. Gibson, D. L. Heine, S. Levin, M. Limon, G. F. Smoot, and C. Witebsky

Lawrence Berkeley Laboratory
University of California
Berkeley, CA 94720

June 1991

1991 Cryogenics Engineering Conference

Huntsville, Alabama

June 11-14, 1991

To be published in *Advances in Cryogenic Engineering,* Vol. 37, February 1992

* This work was supported by the office of Astrophysics of NASA through the ASTROMAG configuration study from GSFC by contract number 556472-D. This work is also supported by the Office of Basic Energy Science, United States Department of Energy, under the contract number DE-AC03-76SF00098.

MEASUREMENTS OF RETRACTABLE GAS-COOLED 6061 ALUMINUM ELECTRICAL LEADS OPERATING IN A VACUUM*

M. A. Green, H. Aguiar, M. J. Bensadoun, J. H. Gibson,
D. L. Heine, S. Levin, M. Limon, G. F. Smoot, and C. Witebsky

Lawrence Berkeley Laboratory
University of California
Berkeley, CA 94720

ABSTRACT

To charge and discharge the ASTROMAG superconducting magnet in space requires retractable gas-cooled leads which must operate in a vacuum. This report describes the design and test of 500 ampere retractable gas-cooled leads made from 6061-T4 aluminum tubes. Aluminum is attractive for gas-cooled electrical leads in space because of its low mass density and the desire for short leads. Initial tests showed that retractable gas-cooled leads could operate in a vacuum from a source of normal helium . The pressure drop through the leads was low enough to permit a superconducting magnet to be charged and discharged while the leads vent into space. The leads were stable at currents above 700 amperes. The voltage drop across the contact between the upper and lower leads was as low as 1.2 mV per lead out of a total voltage drop of 42 mV per lead when the leads carried 714 amperes. The gas required for cooling was comparable to the more conventional copper gas-cooled current leads. In a second test seven months later, The contact resistance between the lead sections had increased considerably. In the second test, the contact resistance was repeatable for one lead but not for the other.

INTRODUCTION

This report describes the testing of a pair of retractable gas-cooled leads made of 6061 aluminum with connection contacts in the dewar vacuum space. This report deals primarily with the lead test performed in August 1990. A second test in March of 1991 repeated many aspects of the 1990 test, but there was a substantially higher contact resistance between lead sections.

The purpose of the LBL gas-cooled lead experiment was to demonstrate the feasibility of aluminum retractable gas-cooled leads which have their contacts in vacuum at the lower end of the movable leads. The experiment tested specifically the following: (1) The performance of aluminum gas-cooled leads was tested. Aluminum leads have not been reported in the literature, but they offer some potential advantages for space application (short length and low mass).[1,2] (2) The contact resistance of the lead contacts in vacuum was measured. The contact surface of the upper lead was silver plate on the aluminum. The lower lead contact was unplated copper. Calculations of retractable leads suggest that reasonable contact resistances could be tolerated but contact resistance was difficult to

predict.[3] (3) An objective of the experiment was to measure the lead pressure drop as a function of flow rate and average temperature. Thus, an annular low pressure drop lead design was tested. (4) The difference in the heat flow down the cold part of the lead when leads were retracted and attached was roughly measured.

THE EXPERIMENTAL SETUP

The experiment consisted of 790 mm long retractable gas-cooled leads made from 6061 aluminum. The retraction of distance is approximately 15 mm. The alloy was chosen because its mass density is one third that of copper and its low temperature resistivity is about twice that of phosphor-deoxidized copper commonly used to make copper gas-cooled leads. As a result, the aluminum lead will have 30 percent of the copper lead mass and 80 percent of the length of a comparable copper lead designed to carry the same current.[2] (See Figure 1 for the 6061 aluminum annular lead design.) The 200 mm long lower (stationary) portion of the leads was made from low resistance ratio phosphor-deoxidized copper pipe. The aluminum contact points were silver plated; the copper was unplated. The retraction mechanism was a simple screw mechanism which helped push the upper leads against the lower leads.

The leads were housed under vacuum inside of a 152 mm (6 inch) diameter stainless steel tube. The lower end of this tube was at 4.2K; the upper end was at room temperature. The lead apparatus located inside the stainless steel tube consisted of the two retractable 6061 aluminum leads, the two stationary copper lower leads, a copper crossbar with superconductor attached, flexible stainless steel tubes connecting the retractable upper leads with the stationary lower lead, and a copper inlet tube which fed cold helium gas into the lower end of the leads. Fig. 2 shows the lead experimental setup within the stainless steel can and the 10 inch diameter helium dewar.

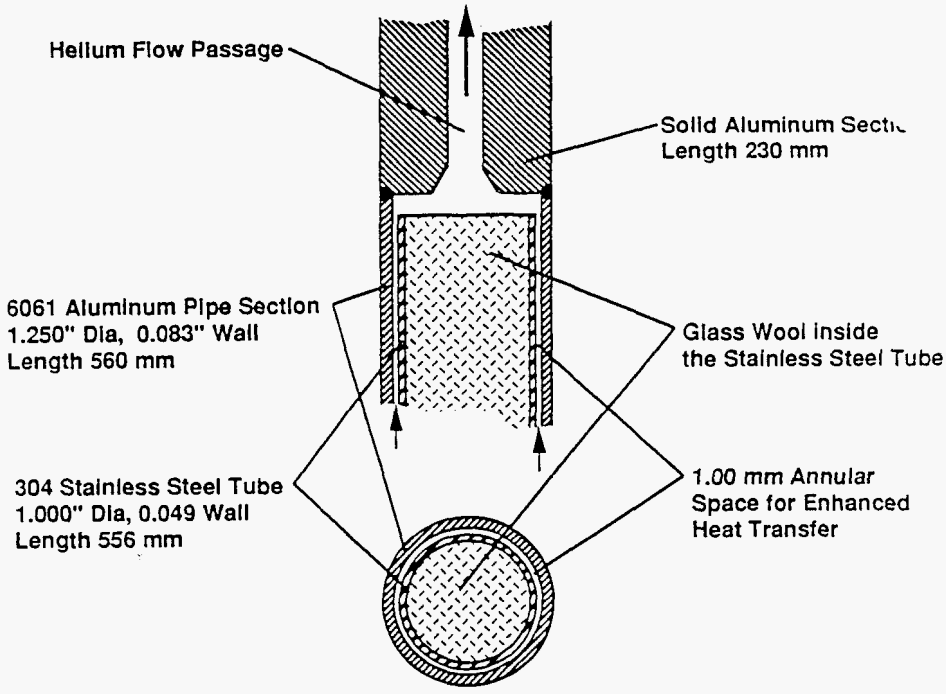

Fig. 1 A Cross-section of the 6061 Aluminum Enhanced Heat Transfer Helium Gas Cooled lead for the ASTROMAG Lead Experiment

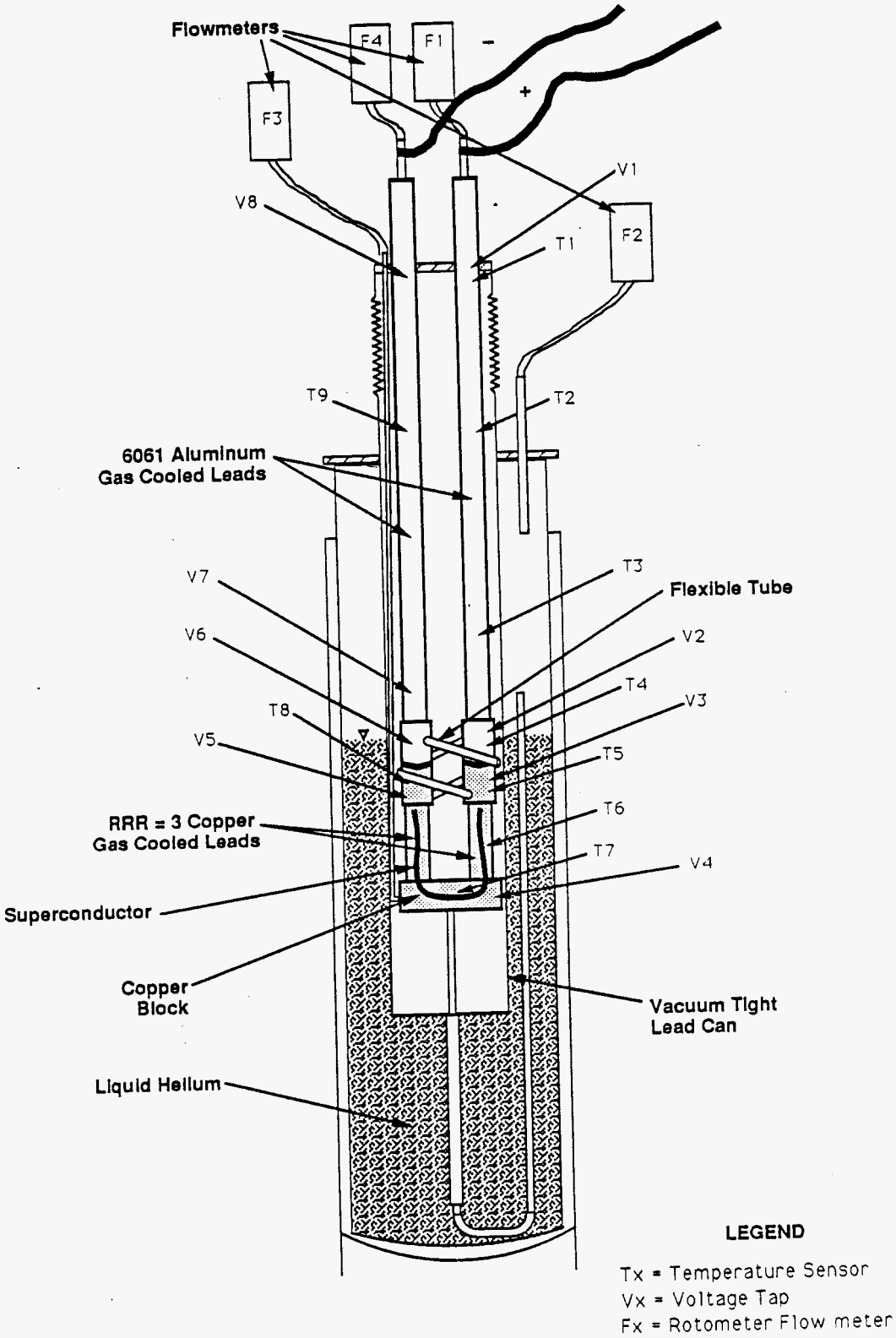

Fig.2 The Lawrence Berkeley Laboratory Retractable Gas-cooled Lead Experiment Showing the Location of Temperature Diodes, Voltage Taps, and Flow Meters

The retractable leads and the stationary leads were instrumented with diode thermometers (indicated in Fig. 2 with T and a number) and voltage taps (indicated in Fig. 2 with V and a number). Each lead was equipped with a helium rotometer gas flow meter F1 and F4. Flow meters F2 and F3 measured flows from the lead block and the tank. Both the 6061 aluminum retractable upper leads and the copper lower stationary leads were gas-cooled. The gas flowed from the stationary copper lead to the retractable aluminum lead through small-diameter flexible stainless steel tubes which could move 15 mm with the retractable portion of the lead.

A number of other system variables were also monitored. The pressure above the helium was measured at the top of the tank. The pressure in the small line leading to the bottom of the leads was measured and the differential pressure across each lead were also measured. A meter monitored the level meter in the dewar, and a vacuum gage monitored the pressure in the lead housing.

The retractable lead experiment was not performed in a low heat leak cryostat. Besides the leads themselves, heat came into the dewar from the following sources: (1) Heat flow through the 0.5 mm thick wall of the 254 mm diameter dewar wall; (2) heat flow through the 1.6 mm thick, 152 mm diameter vacuum wall in which the leads are located and, (3) radiation and conduction in the lead space and the space between the dewar wall and the vacuum can. Poor vacuum in the lead housing contributed to the dewar heat leak during the first test, but the extra heat load was small. During the first test, when the leads were retracted, the dewar heat load was about 3.8 W. With the lead connected and cooled, the heat leak went up to about 5.2 W. Retraction of the upper leads away from the lower leads reduced the heat flow down the leads by a factor of five.

CONNECTION OF THE RETRACTABLE LEADS

The leads were cooled by gas flow through F3 with the leads in the retracted position until the helium boil off approached equilibrium and the bottom end of the lead was cold. At this point, the temperature at the bottom of the lead was about 10K; the temperature on the lower lead at the contact point was about 25K; and upper lead contact was about 90K. After the leads were connected, but before gas flow through the leads was started, the temperature at the bottom of the leads rose to 30K; the temperature at the upper contact and the lower contact quickly (within 150 s) became the same about 70K. Temperatures on the upper part of the upper leads were not changed by the act of connecting the upper and lower leads (over a time period of 600 s).

The contact resistance between the lower and upper leads was lower than expected during the August 1990 experiment. When the leads carried 713 A, the measured voltage drop was 1.2 mV when the contact temperature was about 35 K. This corresponds to a joint resistance of 1.7 micro-ohms. The joint resistance rose with the lead temperature suggesting that the contact between the upper and lower leads was a metal to metal contact.

In the March 1991 test, the joint resistance was a factor of 6 to 60 higher than in the previous test, as the lead temperature increased the joint resistance went down. In the 7 months between the tests, the lead contacts sat in a moist air environment. The increase in the contact resistance noted in the March 1991 test could be due to an oxide coating on the contacts (which behaves like a semiconductor), the improved vacuum in the experiment or changes in the lead lengths and mounting which may have caused poor seating of the the joints. During the second test, the leads were connected and disconnected fifteen times. The contact resistance of one lead varied almost a factor of six (from 26 to 160 micro-ohms)in an almost random way, while the other lead showed a much smaller variation of contact resistance (15 to 25 micro-ohms).

PERFORMANCE OF 6061 ALUMINUM GAS-COOLED LEADS

One of the purposes of the LBL gas-cooled lead experiment was to measure the performance of gas-cooled leads made from 6061 aluminum. The aluminum upper gas-cooled lead shown in Fig. 1 has a cross-section area of 196 mm^2 and a length of 790 mm. The helium cooling within the 1 mm annulus was good enough to insure near optimum performance.[4] The approximate optimum current for the during the August 1990 experiment

was 520 A. At a current of 611.5A, the 6061 lead demonstrated good performance at gas flow rates of 0.036 to 0.039 g s^{-1} (26-28 SCFH) per lead. The leads ran at this current and flow rate for about 1900 s. The upper end temperature rose from 270K to 300K (and was still slowly rising). The temperature at the lead joint rose from 20K to 50K. However, the bottom of the lower lead was warmer than optimum. The gas flow should have been higher in order to insure that the bottom of the lower lead is below 10K. The optimum gas flow for the 6061 leads at 611.5A appears to be about 0.042 g s^{-1} (30 SCFH) per lead.

During the March 1991 experiment, the 6061 aluminum lead was shortened in order to make room for a 1.8 K superfluid helium pump loop at the bottom of the experiment. As a result, the optimum lead current increased from 520 A to about 750 A. The mass flow required to cool the leads at a given current was higher because the lead design current was increased and the joint resistance between the upper and lower leads was higher. The mass flow in the leads operating at 480 amperes was 0.034 g s^{-1} (24 SCFH) for the lead with a 12 micro ohm contact joint resistance and 0.045 g s^{-1} (32 SCFH) for the lead with a 44 micro ohm contact joint resistance. When the gas flow was increased, the lead joint contact resistance increased as the contact joint temperature decreased. The experiment was run at gas flows of 0.056 to 0.112 g s^{-1} (40-80 SCFH) at a current of 790 A. The lead temperature was low in both leads; the contact resistance of the positive lead (the high gas flow lead) was 80 to 100 micro-ohms while it remained around 16 micro-ohms for the negative lead. Even when the contact joint provided half of the voltage drop in a leads, the leads seemed to perform in a reasonably stable way.

PRESSURE DROP ALONG THE LEADS

When the flow was about 0.038 g s^{-1} (27 SCFH) and the average pressure in the lead was 880 Torr (17.0 psi) the lead pressure drop was 1.7 Torr (0.033 psi) . When the lead flow rate was increased to 0.053 g s^{-1} (38 SCFH), the pressure drop increased to 2.4 Torr (0.046 psi). The measured pressure drop was essentially linear with the mass flow as one would expect in a laminar flow device [5]. As the temperature in the upper part of the lead dropped, the lead pressure drop also fell. An increase of lead flow from 36 SCFH to 72 SCFH increased the pressure drop from 2.3 Torr to 5.1 Torr (a bit more than a factor of two). As the lead cooled at the higher flow rate, the pressure drop declined to 4.6 Torr.

SUMMARY

The primary objectives of the LBL retractable lead experiment were met.[6] 6061 aluminum appears to be a good choice for ASTROMAG leads. The 6061 aluminum leads performed as well as standard phosphor-deoxidized copper leads. During the first experiment, the joint resistance was lower than expected, producing voltage drops of less than 2 mV across the contact joints at currents of 713A (compared to the overall voltage drop of 35 to 40 mV per lead). The second experiment demonstrated the fickleness of the joint resistance. The leads did not weld together when they were connected, but a good reproducible contact was not demonstrated either. More work must be done in order to ensure that a joint resistance of 10 micro-ohms or less can be maintained reliably over a long period of time.

The lead pressure drops measured in the LBL experiment are quite low, but the average pressure in the lead is over 1 atm. If the lead exit pressure were reduced to a few Torr, the measured 1.7 Torr (0.033 psi) pressure drop would translate to a lead pressure drop of 40 to 60 Torr (0.77 to 1.16 psi) at flow rates of 0.038 g s^{-1}.(27 SCFH) Even at flow rates as low as 0.038 g s^{-1}, the tank pressure in ASTROMAG will not be high enough to drive helium through the leads. Pumped or pressurized helium flow will be required in order to provide adequate flow for the leads during the charging or discharging of the ASTROMAG magnet.

ACKNOWLEDGMENTS

This work was supported by the office of Astrophysics of NASA through the ASTROMAG configuration study from Goddard Space Flight Center by contract number 556472-D. This work is also supported by the Office of Basic Energy Science, United States Department of

REFERENCES

1. M.N. Wilson, Superconducting Magnets, Chapter 11.1 on gas-cooled leads, Clarendon Press, Oxford, (1983).

2. M.A. Green, "Retractable Gas-cooled Leads for the LBL ASTROMAG Lead Experiment", ASTROMAG Note-023, a Lawrence Berkeley Laboratory Internal Report, (1989).

3. W.L. Pope and M.A. Green, "Retractable Gas-cooled Leads for ASTROMAG", Advances in Cryogenic Engineering, Vol. 35, p 793, Plenum Press, New York (1989).

4. R.G. Smits, P. L. Andrews, and W. A. Burns, "Gas-cooled Electrical Leads for Use on Forced Cooled Superconducting Magnets", Advances in Cryogenic Engineering, Vol. 27, p 169, Plenum Press, New York (1981).

5. R.K. Shah and A.L. London, Advances in Heat Transfer, Laminar Forced Convection in Ducts, Academic Press, New York (1978).

6. H. Aguiar, M. Bensadoun, J. Gibson, et al, "LBL Retractable Gas-cooled Lead Experiment," Lawrence Berkeley Laboratory, ASTROMAG Note-028, LBID-1655, (1990).