5-99
10-27-83 JS (1) over 19 cys Dr. 1880-5

DOE/ET/27026-2-3

DOE/ET/27026-2
(DE83017656)

ADDENDUM TO MATERIAL SELECTION GUIDELINES FOR GEOTHERMAL ENERGY UTILIZATION SYSTEMS

Part I: Extension of the Field Experience Data Base
Part II: Proceedings of the Geothermal Engineering and Materials (GEM) Program Conference (San Diego, CA, 6–8 October 1982)

By
Carolyn S. Smith
Peter F. Ellis II

May 1983

Work Performed Under Contract Nos. AC02-79ET27026
AC03-81SF11503

Radian Corporation
Austin, Texas

U. S. DEPARTMENT OF ENERGY
Geothermal Energy

DISCLAIMER

This report was prepared as an account of work sponsored by an agency of the United States Government. Neither the United States Government nor any agency Thereof, nor any of their employees, makes any warranty, express or implied, or assumes any legal liability or responsibility for the accuracy, completeness, or usefulness of any information, apparatus, product, or process disclosed, or represents that its use would not infringe privately owned rights. Reference herein to any specific commercial product, process, or service by trade name, trademark, manufacturer, or otherwise does not necessarily constitute or imply its endorsement, recommendation, or favoring by the United States Government or any agency thereof. The views and opinions of authors expressed herein do not necessarily state or reflect those of the United States Government or any agency thereof.

DISCLAIMER

Portions of this document may be illegible in electronic image products. Images are produced from the best available original document.

CATHODIC PROTECTION FOR GEOTHERMAL WELLS

B. Ohnysty, D. G. Slattery and M. Morris

Department of Mechanical Engineering, College of Engineering
San Diego State University
San Diego, California 92182-0191

ABSTRACT

A study was conducted to determine the current requirements for cathodic protection of geothermal wells. Oil well technology was applied in this study. Results of laboratory tests and field tests are presented. Attenuation calculations indicate that the cathodic protection current determined from field tests would protect the specific individual geothermal well.

INTRODUCTION

The corrosive nature of Imperial Valley geothermal brines is well documented. Corrosion problems may be classified as surface or underground problems. Surface corrosion problems are often "solved" by using relatively inexpensive materials and construction techniques to yield components with limited life. These components are then replaced as required.

Underground or well corrosion problems may be caused by external or internal corrosion to the pipe wall. External casing corrosion resulting from contact with aerated ground water has been controlled with multiple casings and with careful cementing of the annuli in New Zealand (1).

Typically, geothermal wells in the Imperial Valley are externally cemented down to the reservoir depths. This cement can function as a protective barrier to ground water as long as the cement remains intact and bonded to the well casing. Problems with brine infiltrating the space between the cement and the casing resulting in a well failure was reported at Cerro Prieto, Mexico (2). Internal corrosion problems in wells have also been reported at Cerro Prieto.

This paper will cover a study conducted to investigate the application of oil field cathodic protection technology to reduce external corrosion of geothermal wells.

CATHODIC PROTECTION CURRENT REQUIREMENTS

Current requirements for protection may be estimated from laboratory polarization data or from field tests. Polarization curves for API alloys K-55, N-80 and C-75 were determined using either a synthetic brine (3) at 100 ± 5°C or a soil with 15 w/o synthetic brine as an electrolyte. The polarization data were obtained using the potentiostatic method described in ASTM G-5 (4). Figure 1 is typical curve (N-80 in soil/brine). Results of these tests are summarized in Tables 1 and 2.

Several criterion may be used with polarization diagrams to estimate current requirements for cathodic protection (5). Two criterion were selected for this study. The first criterion was sufficient current to give a polarization potential of the structure, in addition to any IR drop, of -.85 volt with reference to a copper-copper sulfate electrode. The second criterion was sufficient current to change the potential of the corroding structure 0.2 to 0.3 volts from its average corrosion potential. Table 3 summarizes the current requirements obtained by these two criterion.

Field testing or well head measurements were obtained for geothermal well mesa 5-1 and 6-1. These wells are located at the D.O.E. Geothermal Test Facility, East Mesa Test Site, Imperial Valley, Ca. E-Log I method was used for well head measurements (6). The experimental procedure is shown in Figure 2. The $Cu/CuSO_4$ electrode was placed 100 feet from the well and in the opposite direction from the anode. Field personnel at East Mesa indicated that the well casing alloy for 5-1 and 6-1 was API alloy N-80. Field test results are shown in Figures 3 and 4 and compared with laboratory data in Table 3.

The two laboratory criterion described above and the E-Log I test are subject to criticism. The objection to these criterion are discussed elsewhere (5, 7). A casing potential profile (CCP) is considered at this time to be the most accurate method to determine current required for cathodic protection. Equipment limitations prevent this technique from being used at the present time in geothermal wells.

The variation in current requirements between laboratory and field testing is not surprising. Duplication of actual down-hole conditions in the authors' laboratory is not possible at the present time. Part of the criticism of the criterion used above is that the criterion are not accurate predicators of cathodic current

requirements (5, 7).

The data from E-Log I tests (least conservative) were used to obtain attenuation data along the well length. The Pope equation was used for these calculations (8). Results are shown in Figure 5a, b. The indication from these plots is that the well casing would be protected, i.e. the potential is less than -.85 volts referenced to a $Cu/CuSO_4$ electrode. The cement coating was assumed to be intact and of very high electrical resistance. The brine was also assumed to be of high electrical resistance.

Attenuation calculation varied considerably depending on values of electrical resistance assumed for the cement and the brine. Very low resistance values for the brine and cement required very large currents and provided little protection. The E-Log I field test indicates that the high resistance values for the cement and brine are more realistic.

CONCLUSIONS

Current requirements for cathodic protection of geothermal wells can be estimated from laboratory polarization tests and from E-Log I tests performed at the well head. In this study, laboratory polarization tests indicated conservative current density (high current requirements) compared to the E-Log I test. Attenuation calculations using current and potential values from the E-Log I test indicate that mesa well 5-1 and 6-1 would be protected based on the criterion of the well having a potential of -.85 volts referenced to a $Cu/CuSO_4$ electrode.

REFERENCES

(1) Ellis, P. F., and Conover, M. F., 1981, "Materials Selection Guidelines for Geothermal Energy Utilization Systems," Radian Corp., DOE/RA/27026-1, January.

(2) Dominguez, B., and Vital, F., "Geothermal Well Maintenance and Repair in Cerro Prieto."

(3) Danielson, J. J., 1980, "Application of Linear Polarization Techniques to the Measurement of Corrosion Rates in Simulated Geothermal Brines," Geothermal Scaling and Corrosion, ASTM STP 717, L. A. Casper and T. R. Pinchback, Eds., Am. Soc. for Testing and Materials, p. 41-56.

(4) ASTM Designation G5-78, "Standard Reference Method for Making Potentiostatic and Potentiodynamic Anode Polarization Measurements."

(5) Haycock, E. W., 1957, "Current Requirement for Cathodic Protection of Oil Well Casing," Corrosion, 767t, Vol. 13, November.

(6) Ahmad, N., 1980, "Remote Cathodic Protection of Water Well Casings," Paper No. 246, Corrosion/80, Chicago, Ill., 3-7 March.

(7) Jones, D. A., 1971, "The Application of Electrode Kinetics to the Theory and Practice of Cathodic Protection," Corrosion Science, Vol. 11, p. 439-451.

(8) Pope, R., 1946, "Attenuation of Forced Drainage Effects on Long Uniform Structure," Corrosion, Vol. 2, p. 307, Reprinted--Materials Performance, 1981, 12, Vol. 20, p. 29.

TABLE 1. SUMMARY OF POLARIZATION DATA FOR API GRADE ALLOYS
(All test in a high salinity synthetic brine at 100 ± 5°C)

API Alloy Designation	Purge Gas					
	N2			Air		
	E_{corr}(Volts) E vs. SCE	i_{corr} (ua/Cm^2)	Corrosion Rate in/yr.	E_{corr}(Volts) E vs. SCE	i_{corr} (ua/Cm^2)	Corrosion Rate in/yr.
K55	-.67	28	0.013	-.67	37	0.017
C75	-.68	28	0.013	-.64	28	0.013
N80	-.69	36	0.017	-.65	23	0.011
N80	-.66	10	0.005	-.67	47	0.022
N80	-.67	15	0.007	-.67*	270*	0.123*

*Problems in adjusting pH of brine, excess HCL and NaOH used.

TABLE 2. SUMMARY OF POLARIZATION DATA FOR API GRADE ALLOYS (All test in soil + 15 w/o synthetic brine-ambient temp.)

	E_{corr}(Volts) E vs. Cu/$CuSO_4$	(ua/Cm^2)	Corrosion Rate (in/yr.)
K55	-.70	7.0	.003
C75	-.70	7.5	.003
N80	-.67	7.5	.003

TABLE 3. CATHODIC PROTECTION CURRENT DETERMINATION FOR API ALLOY GRADE N-80 (mA/ft^2)

From Polarization Data	Brine	Soil/ 15 w/o Brine
for -.85 volts	139-214	17.7
for .2 to .3V noble	*	#
From E-Log 1		
Well 5-1	4.6	
Well 6-1	5.5	

*voltage < -.85.

#voltage ≈ -.85.

FIGURE 1. POLARIZATION DIAGRAM FOR N-80 IN SOIL + 15 W/O SYNTHETIC BRINE-POTENTIOSTATIC MEASUREMENT

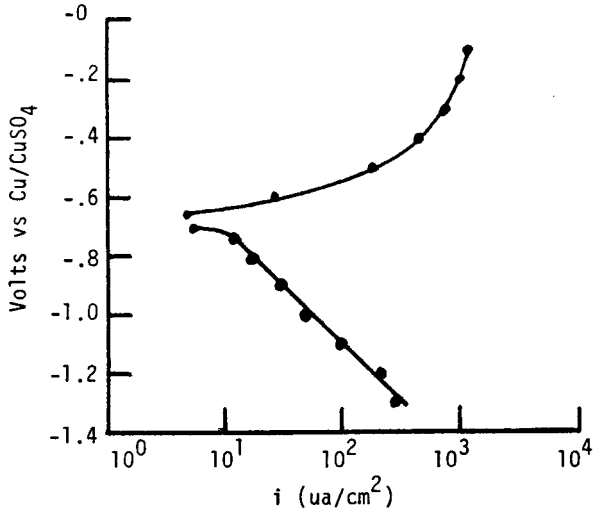

FIGURE 2. E-LOG I PROCEDURES

A. ELECTRICAL CONNECTIONS

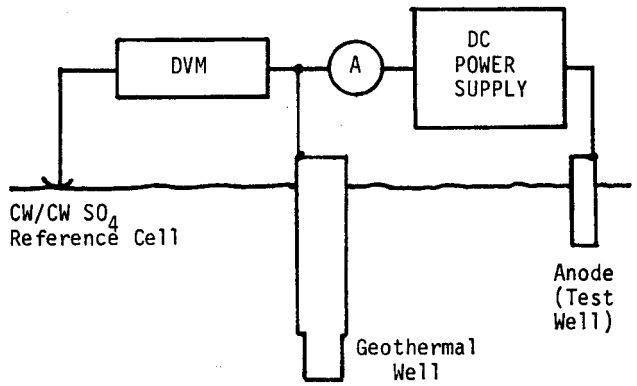

B. TEST PROCEDURE

1. Read native potential (Power Supply OFF) at DVM.
2. Power Supply ON - Adjust to 2 amps.
3. Wait three (3) minutes, Power Supply OFF, read potential at DVM.
4. Turn Power Supply ON, increase current an additional 2 amps.
5. Repeat steps 3 and 4 until 22 amps is reached.
6. Plot E-Log I.

FIGURE 5(a). ATTENUATION PROFILE, EAST MESA WELL 5-1

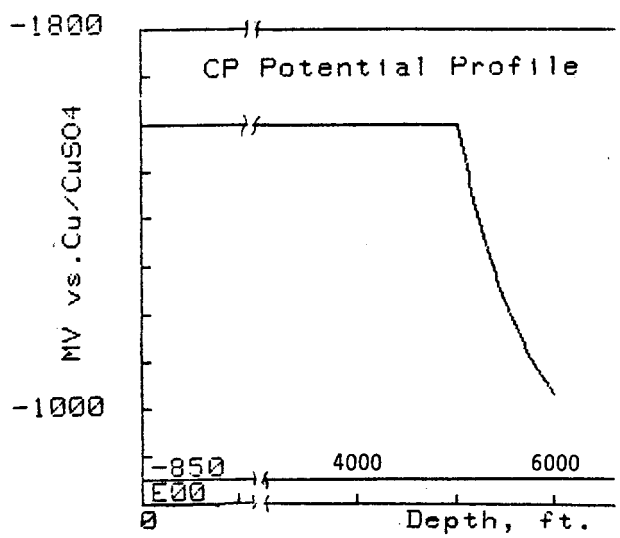

FIGURE 5(b). ATTENUATION PROFILE, EAST MESA WELL 6-1

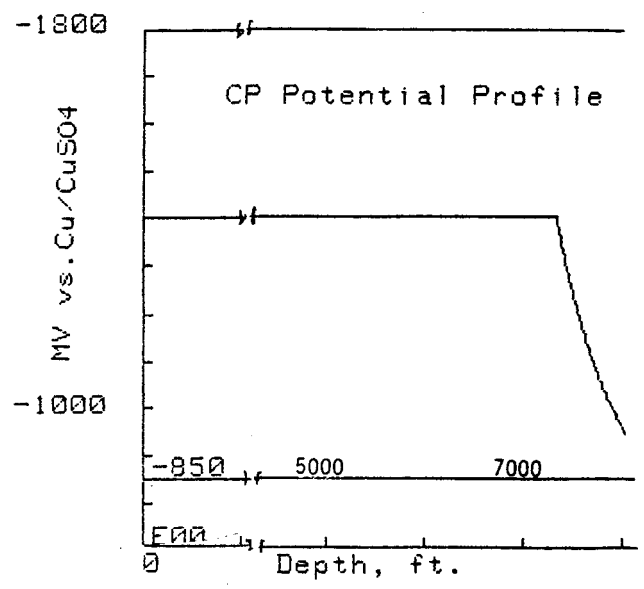

FIGURE 3. E-LOG I CURVE, GEOTHERMAL WELL MESA 5-1 (FLOW INTO WELL, 220 GPM; PRESSURE 460 psi; TEMPERATURE OF EXHAUSTED BRINE, 80°F)

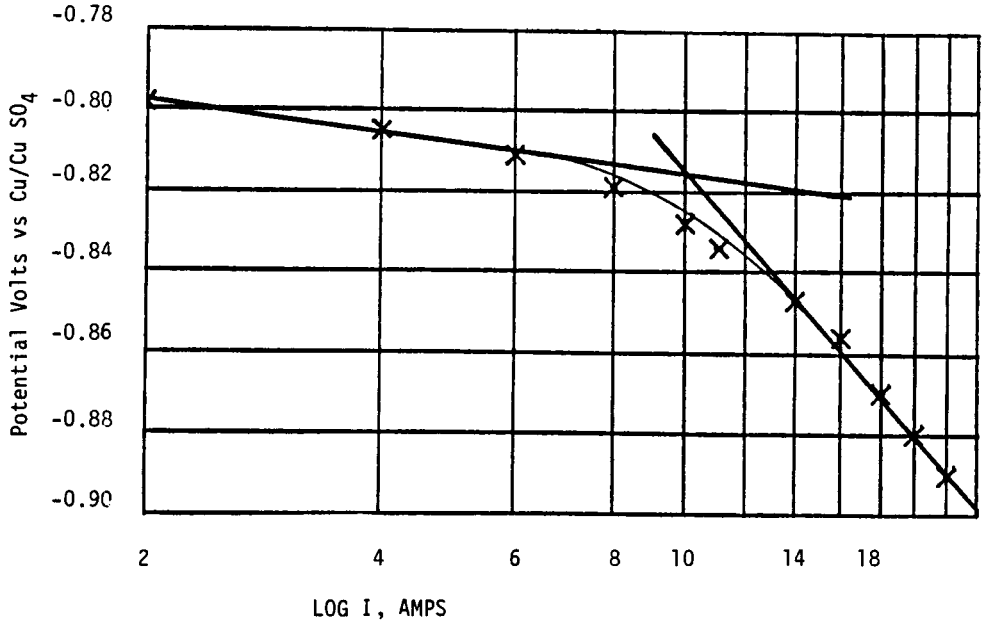
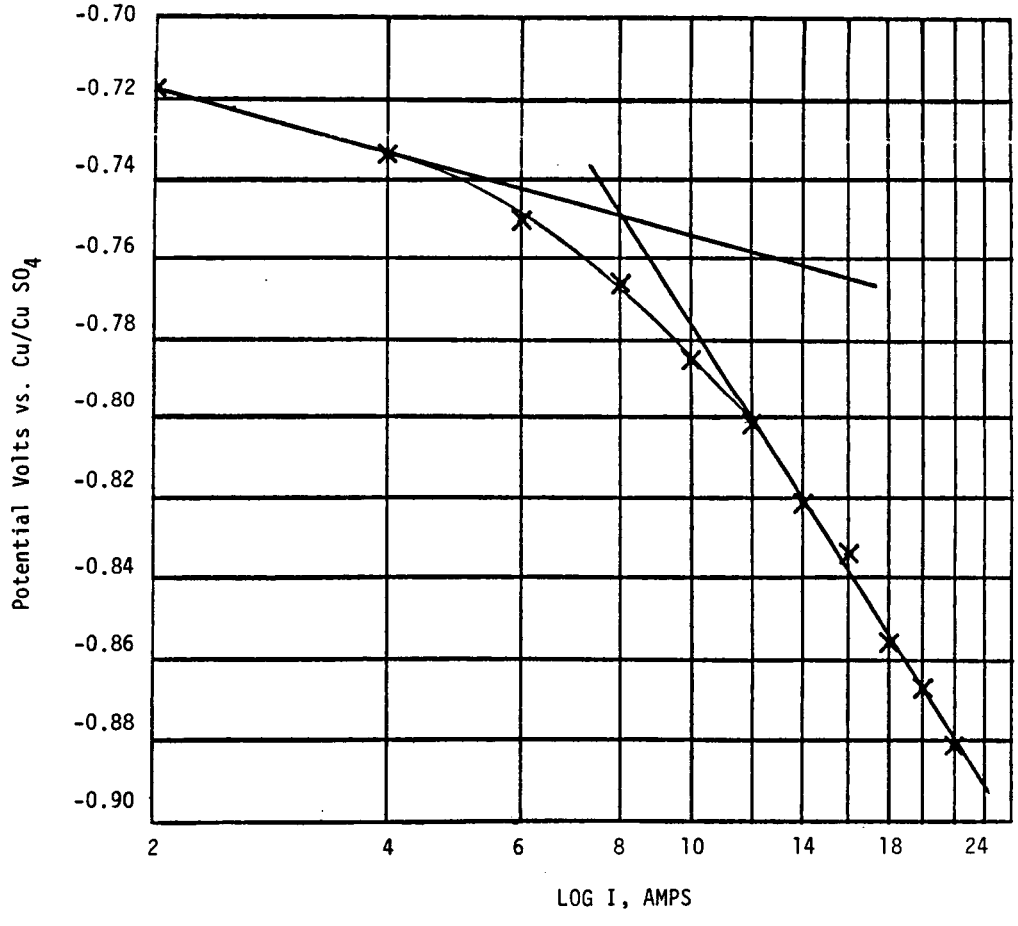
FIGURE 4. E-LOG I CURVE, GEOTHERMAL WELL MESA 6-1