Proc. Int. Conf. on Hypernuclear and Strange Particle Physics
HYP 2000
Torino, Italy
October 23-27, 2000

BNL-68227

Recent Results from E885 -A Search for Doubly Strange Objects

Morgan May[a] for the E885 Collaboration*

[a]Physics Department, Brookhaven National Laboratory, Upton, NY 11973

E885, an experiment performed at the Brookhaven National Laboratory Alternate Gradient Synchrotron (BNL AGS) achieved high sensitivity in a search for $\Lambda\Lambda$ hypernuclei, Ξ hypernuclei, and the H particle. Evidence was found for Ξ hypernuclei. Possible extensions of the methods used are discussed.

1. INTRODUCTION

E885[1–7] was a very sensitive survey experiment of the virtually unexplored area of doubly strange nuclei. It also produced limits on deeply bound H particles which are a factor of 50 below earlier theoretical predictions[8]. The 2 GeV kaon beam at the AGS is the most intense in the world at the ideal momentum for these studies. The experiment observed 300,000 (K^-, K^+) events (in which two units of strangeness are transfered to the target nucleus), 10 times the existing data. Pioneering the use of a large diamond target, 20,000 stopping Ξ^- were observed, 100 times the existing data.

The experiment was the first sensitive non-emulsion search for double hypernuclei and found evidence for Ξ hypernuclei production. Some of the techniques developed for E885 and the results obtained point the way to new experiments using dedicated beam at the BNL AGS and later at the Japan Hadron Facility (JHF planned for 6 years hence).

2. MOTIVATION FOR STUDYING MULTIPLY STRANGE SYSTEMS

Experimental knowledge of the $\Lambda\Lambda$ and ΞN interactions will play a crucial role in understanding the fundamental baryon-baryon interaction and its symmetries. Multiply strange systems are also interesting because of the possibility of new states of matter containing two or more units of strangeness. In addition, double hypernuclei have direct consequences for astrophysical problems, especially concerning the structure of neutron stars where a large strange quark component is expected[9].

*J. Lowe, University of Birmingham; D.E. Alburger, R.E. Chrien, M. May, P. Pile, A. Rusek, R. Sawafta, R. Sutter, Brookhaven National Laboratory; A. Berdoz, A. Biglan, D.S. Carmen, G.B. Franklin, P. Khaustov, P. Koran, R. Magahiz, R. McCrady, F. Merrill, C.A. Meyer, K. Paschke, B.P. Quinn, R.A. Schumacher, Carnegie Mellon University; T. Burger, H. Fischer, J. Franz, H. Schmitt, University of Freiburg; T. Iijima, KEK; V.J. Zeps, University of Kentucky; A. Ichikawa, K. Imai, Y. Kondo, K. Yamamoto, M. Yosoi, Kyoto University; F. Takeutchi, Kyoto Sangyo University; P.D. Barnes, Los Alamos National Laboratory; C.A. Davis, L. Gan, M. Landry, L. Lee, S.A. Page, W.D. Ramsay, W.T.H. van Oers, University of Manitoba; B. Bassakeck, R.W. Stotzer, University of New Mexico.

The mass difference between the strange quark and the u and d quarks is of the order of the color magnetic splitting in hadrons. The strange quark is distinguishable from u and d and thus its presence permits greater symmetry of states and more attraction. This has led to the prediction of the existence of the H particle (a six quark $uuddss$ spin and color singlet) and of strangelets which are multiquark states with roughly 1/3 strange quarks.

The H particle is the lightest strangelet. If the H particle is deeply bound, two Λ particles in a hypernucleus will fuse to form it. Thus the existence of weakly decaying double-lambda hypernuclei, especially the lightest species, can rule out existence of a deeply bound H particle.

At the high densities found in neutron stars, the existence of a substantial strange particle component is energetically favored. Thus, knowledge of the hyperon-hyperon interaction is necessary for understanding their equation of state, maximum mass, and structure. If the Λ-Λ interaction is attractive, then a lambda superfluid will form in neutron stars[10]. Experiments with data on double-lambda hypernuclei can determine whether a lambda superfluid should exist.

3. APPARATUS

The experiment is described in references[1–3] and in more detail in theses [4–6]. The apparatus is shown in fig. 1. The experiment was set up in the 2 GeV kaon beam at the Brookhaven National Laboratory AGS. The beam intensity was typically 10^6 K^- per pulse repeated every 3 seconds with p_{K^-}=1.8 Gev/c. In typical running conditions, the beam contained a contamination of pions roughly equal to the number of kaons. A beam line spectrometer instrumented with hodoscope and drift chambers analyzes the momentum of each particle in the beam.

A diamond target $5 \times 8 \times 1$ cm was fabricated from commercially produced diamond wafers formed by the chemical vapor deposition process. This provided the highest density (3.3 gm/cm^3) achievable for a low A target to facilitate stopping Ξ^-.

The K^+ is detected in a magnetic spectrometer with 50 msr acceptance. Particle identification for the K^- and K^+ is achieved by time of flight and Cherenkov counters. Of particular note is the Cherenkov counter labeled FC0 which distinguishes K^+ from protons at the trigger level. It has an aerogel radiator with refractive index 1.12. The counter was the first to use such high density aerogel which was fabricated by a special high pressure technique. Formerly, liquid hydrogen was the only substance with a refractive index near this value.

Large plastic scintillator arrays to the left and right of the target detect neutrons. Gas microstrip detectors upstream and downstream of the target were implemented for part of the data taking[6]. Scintillating fiber arrays were located above and below the target.

4. $\Lambda\Lambda$ HYPERNUCLEI

$\Lambda\Lambda$ hypernuclei were searched for both by stopping Ξ^- and through direct production. Ξ^- produced on one ^{12}C nucleus can stop and be captured by another ^{12}C nucleus in the target. If a $\Lambda\Lambda$ hypernucleus is formed in a two body final state

$$\Xi^- + {}^{12}C \rightarrow {}^{12}_{\Lambda\Lambda}B + n$$

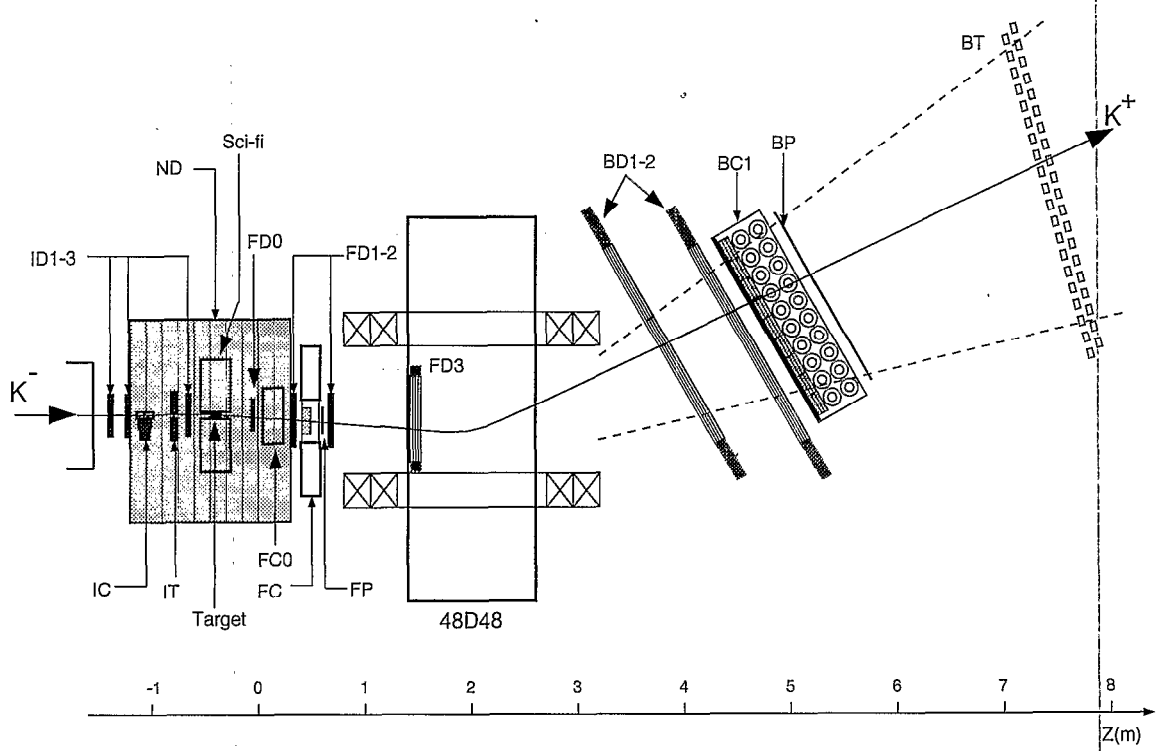

Figure 1. Detector configuration for E885. The drift chambers ID1-3 determine the incident K^- trajectory and, combined with the beam line hodoscope MP(not shown), the K^- momentum. The drift chambers FD0-3and BD1-2 determine the K^+ trajectory through the 1.4 T dipole magnet. Scintillators IT and BT determine the K^+ time of flight. Hodoscopes FP and BP determine the spectrometer acceptance. Aerogel Cherenkovs IC, FC and BC reject pions, while FC0 rejects protons. Above and below the target are scintillating fiber detectors. On the left and right of the target are neutron detectors.

the energy of the monoenergetic neutron determines the binding energy of the $\Lambda\Lambda$ hypernucleus. The neutron energy is determined by time of flight. Ξ^- produced on a proton in a nucleus can have very low momentum compared to production on free protons. Slow Ξ^- likely to stop in the target are correlated with energetic K^+ and were selected by a missing mass cut. The neutron spectrum showed no apparent peaks. An upper limit on the branching ratio of 4% was set in the region of expected neutron energies. More details can be found in references [2,4].

$\Lambda\Lambda$ hypernuclei can be produced directly by the reaction

$$K^- + {}^{12}C \rightarrow {}^{12}_{\Lambda\Lambda}Be + K^+$$

The (K^-, K^+) missing mass spectrum is shown in fig. 2 with the expected location of the ${}^{12}_{\Lambda\Lambda}$Be indicate (assuming total binding of the two lambdas $B_{\Lambda\Lambda}$=25 MeV). Events between this point and the indicated ${}^{11}_{\Lambda}$Be+Λ threshold are candidates for $\Lambda\Lambda$ hypernuclei, and there appears to be a somewhat larger event density here compared to the further negative region. If these events were due to $\Lambda\Lambda$ hypernuclei, the production cross section would

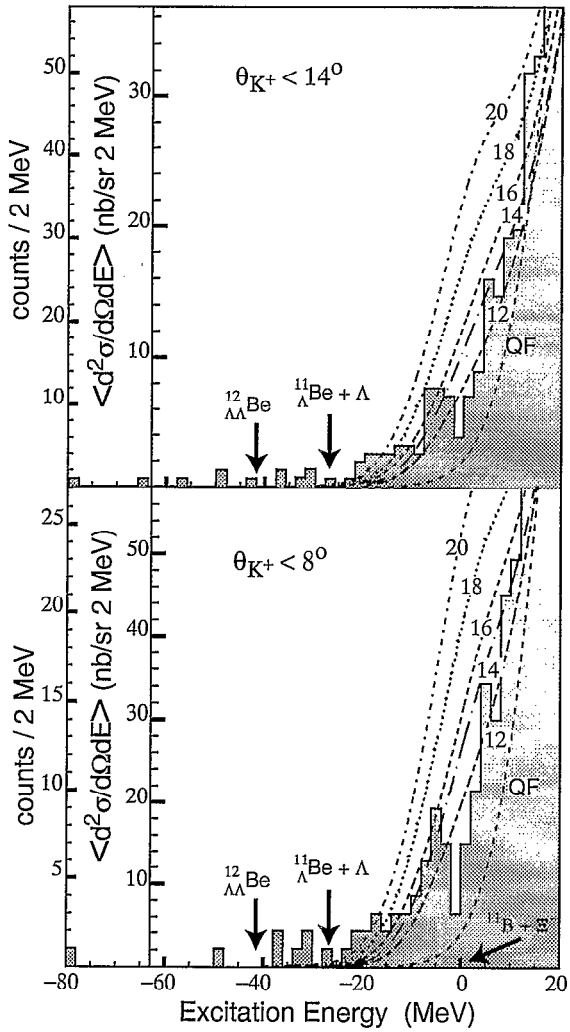

Figure 2. Excitation-energy spectra for $^{12}C(K^-, K^+)X$ for $\theta_{K^+} < 14°$ (top) and $\theta_{K^+} < 8°$ (bottom). Theoretical curves for $^{12}_{\Xi}$Be production are shown for various values of the Ξ nucleus potential well depth. The results of a quasifree Ξ production calculation (QF) are also shown. The expected location of the ground state of $^{12}_{\Lambda\Lambda}$Be and other thresholds are indicated by arrows[1].

be 2.2±1.2 nb. The data set an upper limit on the direct production of $^{12}_{\Lambda\Lambda}Be$ of 6 to 8 nb/sr in the vicinity of its nominal location[3].

The only calculation[11] of direct production of $\Lambda\Lambda$ hypernuclei is at 1.1 GeV/c by the two step $(K^-, \pi)(\pi, K^+)$ process. Cross sections of the order of 10 nb/sr were predicted by that calculation for an ^{16}O target. No calculation exists at 1.8 GeV/c where mixing of Ξ and $\Lambda\Lambda$ states may be important.

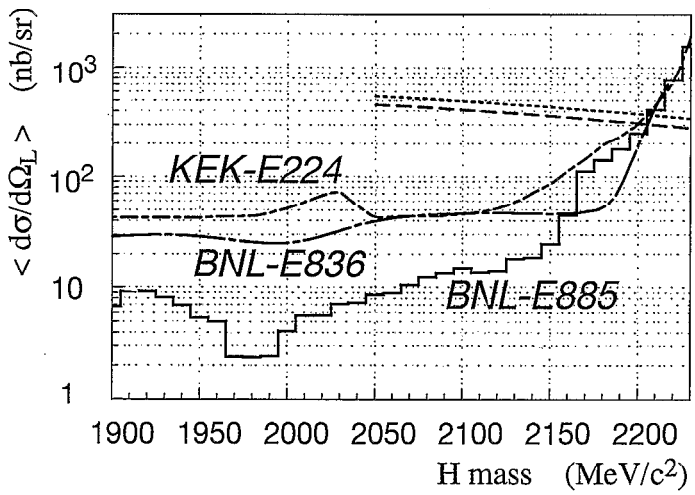

Figure 3. 90% C.L. upper limits[3] on the direct H production cross section on ^{12}C. The dashed line show a theoretical calculation based on the model of Aerts and Dover, while the dotted line represents a modified calculation of Aerts and Dover for the ^{3}He target. The results of KEK-E224 and BNL-E836 are also shown.

5. H PARTICLE

The H particle can be produced on a proton pair in a nucleus $K^- + (pp) \rightarrow H + K^+$. Aerts and Dover[8] pointed out, for the case of a ^{3}He target, that a broad peak in K^+ energy would result if an bound H existed. Their spectator model has been extended to ^{12}C and a search[3,5] was made in E885 for the H by the process $K^- + {}^{12}C \rightarrow H + X + K^+$. The limits obtained are shown in fig. 3 and are quite sensitive compared to other experiments and to theory.

6. Ξ HYPERNUCLEI

A search[1] for Ξ hypernuclei by the missing mass technique was performed in E885 using the reaction $K^- + {}^{12}C \rightarrow {}^{12}_{\Xi}Be + K^+$. Experiment E224 at KEK preceded this experiment in applying this technique, but with considerably lower sensitivity. In fig. 2, events in the region between 0 and -20 MeV excitation energy are candidates for Ξ hypernuclei.

Ξ^- production on hydrogen was observed in data taken using a CH_2 target. This data determined the normalization since the forward angle cross section for Ξ production on hydrogen is known. This data was also used to study the resolution function and its tails. The missing mass resolution for Ξ hypernuclei was determined to be well characterized by a Gaussian with σ= 6.1 MeV. The observed peak of Ξ production on hydrogen was also used for the energy scale calibration.

Background in the bound Ξ region (fig. 2) came from two sources: 1. A flat background due to particle misidentification and tracking errors could be estimated from the paucity of events in the -40 to -80 MeV region where no events are expected from conventional

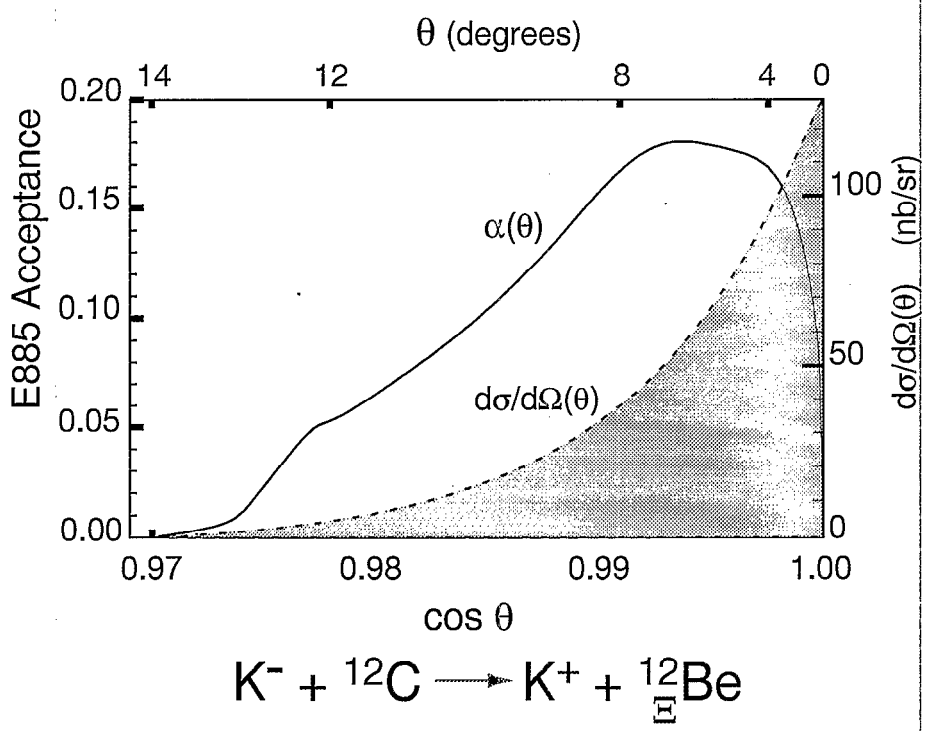

Figure 4. The angular acceptance $\alpha(\theta)$, generated by a Monte Carlo simulation is shown as the solid line. The dashed line shows the results of a DWIA calculation of the angular dependence of the cross section for producing the ground state of the Ξ hypernucleus[1].

processes. 2. Leakage of events from E > 0 due to finite missing-mass resolution could be determined from the resolution function.

The events in the bound Ξ region are considerably above the levels which could be explained by background or the effects of limited resolution. For the data with $\theta_{K^+} < 8°$, an excess of 42 events was observed. This corresponds to a cross section of 89±14 nb/sr. A DWIA calculation of the cross section for Ξ hypernuclei production using a Ξ well depth of 14 MeV is consistent with the data (fig. 2).

Possible sources of signal in the bound Ξ region, other than Ξ hypernuclei are the production of one or two Λs in the continuum, or $\Lambda\Lambda$ hyperfragments. No quantitative estimate of the contribution of these processes has been made, and the final interpretation of the spectrum in terms of one-step Ξ hypernuclear production verses two-step lambda production without an intermediate Ξ state requires additional theoretical work.

7. FUTURE POSSIBILITIES

The results of E885 define the sensitivity needed for direct production of Ξ and $\Lambda\Lambda$ hypernuclei. An integrated flux of 10^{13} K^- combined with missing mass resolution $\sigma < 1$ MeV would yield definitive results. This may be possible in the foreseeable future. With dedicated beam running at the BNL AGS the required flux increase could be realized; an

even greater increase in sensitivity will be possible at the JHF.

Preliminary designs for a K^+ spectrometer for this purpose are summarized by Tang [12]. In fact, somewhat less demanding parameters than he assumed are adequate. Since the cross section for Ξ hypernuclei production falls rapidly with angle (fig. 4), acceptance greater than 50 msr is superfluous. A symmetric acceptance in theta and phi is obviously preferable since this maximizes the acceptance at small angles. The same considerations apply to direct production of $\Lambda\Lambda$ hypernuclei. The same spectrometer would also make possible very sensitive experiments using the $(K^-, \pi^-\gamma)$ reaction to study gamma ray transitions in single Λ hypernuclei[13].

8. ACKNOWLEDGEMENTS

This work is supported in part by United States Department of Energy grant DE-AC02-98CH10886.

REFERENCES

1. P. Khaustov et al., Phys. Rev. C 61 (2000) 054603.
2. P. Khaustov et al., Phys. Rev. C 61 (2000) 027601.
3. K. Yamamoto et al., Phys. Letts. B 478 (2000) 401.
4. P. Khaustov, Ph.D. thesis, Carnegie Mellon University (2000).
5. K. Yamamoto, Ph.D. thesis, University of Kyoto (2000).
6. M. Landry, Ph.D. thesis, University of Manitoba (2000).
7. D. Alburger and M. May, Nucl. Instrum. Methods in Phys. Res. A 443 (2000) 27.
8. A.T.M. Aerts and C.B. Dover, Phys. Rev. D 28 (1983) 450.
9. N. K. Glendenning, Compact Stars, Springer-Verlag, New York, 1997.
10. D. Page, M. Prakash, J. M. Lattimer and A. W. Steiner, Phys. Rev. Lett. 85 (2000) 2048.
11. A.J. Baltz et al., Phys. Lett. 123B (1982) 9.
12. L. Tang, Proceedings of the International Workshop on JHF Science (JHF98), KEK Proceedings 98-5 II (1998) 158.
13. H. Tamura et al., Nucl. Phys. A663 & A664, (2000) 481c. H. Akikawa in these proceedings.