OAK RIDGE ISOTOPE PRODUCTS AND SERVICES – CURRENT AND EXPECTED SUPPLY AND DEMAND

Emory D. Collins, Jerry A. Klein, Joseph B. Knauer, Jr., Charles W. Alexander,
Saed Mirzadeh, W. Scott Aaron, and Rocky L. Cline
Oak Ridge National Laboratory
Post Office Box 2008, Oak Ridge, Tennessee 37831-6176
(423) 574-6928

I. INTRODUCTION

Oak Ridge National Laboratory (ORNL) has been a major center of isotope production research, development, and distribution for over 50 years. Currently, the major isotope production activities include (1) the production of transuranium element radioisotopes, including ^{252}Cf; (2) the production of medical and industrial radioisotopes; (3) maintenance and expansion of the capabilities for production of enriched stable isotopes; and, (4) preparation of a wide range of custom-order chemical and physical forms of isotope products, particularly in accelerator physics research. The recent supply of and demand for isotope products and services in these areas, research and development (R&D), and the capabilities for future supply are described in more detail below. The keys to continuing the supply of these important products and services are the maintenance, improvement, and potential expansion of specialized facilities, including (1) the High Flux Isotope Reactor (HFIR), (2) the Radiochemical Engineering Development Center (REDC) and Radiochemical Development Laboratory (RDL) hot cell facilities, (3) the electromagnetic calutron mass separators and the plasma separation process equipment for isotope enrichment, and (4) the Isotope Research Materials Laboratory (IRML) equipment for preparation of specialized chemical and physical forms of isotope products. The status and plans for these ORNL isotope production facilities are also described below.

II. TRANSURANIUM ELEMENT RADIOISOTOPES

Under the provisions of the National Transplutonium Element Production Program, the Transuranium Processing Plant (TRU), now known as the REDC, and the neighboring HFIR were built at ORNL in the mid-1960s for the "large-scale" production of the transuranium elements for research in nuclear chemistry and physics. Since then, the facilities at REDC and HFIR have become the center for production, storage, and distribution for the transuranium isotopes, including ^{248}Cm, ^{249}Bk, ^{249}Cf, ^{252}Cf, ^{253}Es, ^{254}Es, ^{255}Fm, and ^{257}Fm. In addition to these "mainline" products, some 30 other rare research isotopes, such as ^{242}Cm, ^{245}Cm, and ^{250}Cf, have been produced in small quantities to satisfy the specific experimental requirements of various researchers. To date, nearly 2000 shipments of these transuranium element products have been made to more than 30 different laboratories both domestically and internationally.

The main objectives of the program, from its inception to the present, have been to produce as many of the transplutonium nuclides as possible and to provide them in the highest possible isotopic composition and chemical purity and in the physical forms specified to meet the requirements of individual researchers. The production and distribution of these isotopes are carefully planned and carried out to meet the recommendations of the Transuranium Isotopes Users' Committee, which is composed of representatives from the major U.S. Department of Energy (DOE) laboratories having an interest in transuranium element research. Committee recommendations are based on the most-effective use of these materials to meet the needs of DOE's important research and development programs.

A. Production Facilities

Specialized facilities with diversified processing and fabrication capabilities are required for the production of the transuranium element products. First, a high-flux reactor is required with sufficient neutron fluxes to transmute the target materials to the desired transplutonium isotopes. The HFIR was designed with such neutron fluxes ($>10^{15}$ neutrons/cm^2-s) expressly for the production of the transplutonium element products. Secondly, the reactor production must be coupled with hot cell

facilities having the capabilities for the remote fabrication of targets for irradiation and for the post-irradiation chemical processing operations necessary to recover and purify the product materials. Such capabilities are provided at the REDC. The heavily shielded hot cells located in Buildings 7920 (Fig. 1) and 7930 of the REDC provide the gamma and neutron shielding and high-integrity alpha containment necessary to handle the highly radioactive target and product materials. The

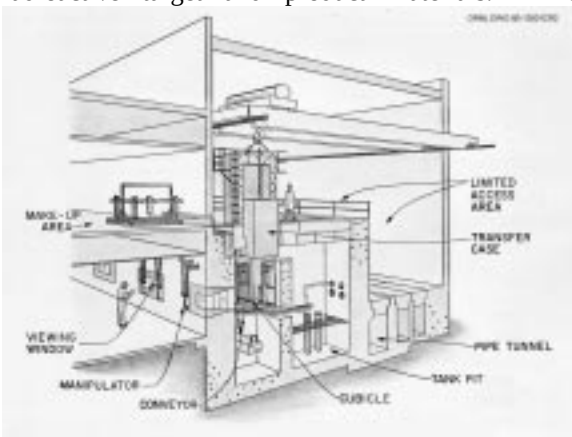

Fig. 1. REDC Building 7920.

remotely operated and maintained equipment located in these hot cells provides the following capabilities: (1) target fabrication, inspection, and certification; (2) post-irradiation chemical processing including target dissolution, solvent extraction, cation and anion exchange, and precipitation/filtration operations; (3) analytical support activities; and (4) remote and contact-handled TRU solid waste handling and characterization. In addition, there are ten laboratories (hot and cold) used for process development, chemical makeup, process-control analyses, final product purifications, and product shipment preparation.

B. Target Materials

A suitable source of target materials, preferably high-atomic-weight curium, is also necessary for the production of the transplutonium elements. Currently targets for HFIR irradiation are being fabricated using "heavy" curium (isotope composition high in ^{246}Cm and ^{248}Cm). Feed material of this type is desirable since its use provides higher product yields of ^{252}Cf and the heavier actinides with less irradiation time than the feed materials used previously, such as ^{242}Pu or "light" curium. The supply of "heavy" curium will be sufficient for the continued production of the transplutonium elements for another 4–5 years at the current production rates. Stockpiles of 88-90 wt % ^{244}Cm will extend production for an additional 8–10 years, and the transfer of americium and curium feed materials from the Savannah River Site (SRS) to ORNL would extend production of the transplutonium elements well into the next century.

C. Production

During the nearly 35 years of operation, 71 chemical processing campaigns have been completed at the REDC to process about 650 targets that had been irradiated in HFIR and another 195 targets that had been irradiated in a reactor at the SRS. To meet the current demands of the transplutonium element research/user community, the strategy is to conduct target fabrication and chemical processing campaigns every 15–18 months. Typically each campaign will supply 0.5 to 1.0 pg of ^{257}Fm, 4 to 6 ng of ^{255}Fm, 4 to 6 μg of ^{254}Es, 100 μg of ^{253}Es (milked), 1 mg of ^{254}Es (mixed), 350 to 400 mg of ^{252}Cf, 5 to 10 mg of ^{249}Cf, 35 to 40 mg of ^{249}Bk, and 150 to 200 mg of ^{248}Cm. Projects to produce, recover, and purify "special" transplutonium element products (i.e., ^{242}Cm, ^{245}Cm, ^{250}Cf) are conducted to meet the specific experimental requirements of individual researchers on an "as-requested" basis.

D. Applications

Areas of research that have used and are continuing to use the transplutonium elements include (1) nuclear reactions and synthesis of new species, (2) nuclear properties of the transplutonium elements, (3) chemical properties of the transplutonium elements in solutions, (4) spectroscopy on the heavy actinide elements, (5) solid-state and magnetic properties, and (6) biomedical applications. Significant progress has been made in recent years in these areas. Important findings include (1) the discovery of bimodal fission in some nuclides with $Z \geq 100$, (2) the longer-than-expected spontaneous fission half-lives in some neutron-rich nuclides, (3) chemical studies of elements Lr (103) and Mt (109) by "one-atom-at-a-time" techniques, (4) formation of Bk(II) by pulse radiolysis of Bk(III) solutions, and (5) elucidation of the photophysics of Bk^{4+} and Cm^{4+}.

E. Californium-252 Neutron Sources

One of the transplutonium elements, ^{252}Cf, has rather poor characteristics for research because of its intense neutron emission. However, for this very reason, ^{252}Cf has a great many industrial and/or medical applications as a portable neutron source. In the years since the Transplutonium Element Program began, over 2.5 g of ^{252}Cf (out of the nearly 9 g

produced) has been provided to the DOE Californium-252 Industrial Sales/Loan Program and the University/Medical Loan Program. Common applications of ^{252}Cf include (1) neutron activation analysis followed by gamma spectroscopy for trace multielemental analysis with sensitivities typically greater than or equal to parts per million, (2) prompt gamma neutron activation analysis for rapid nondestructive chemical assay of the principal elemental contents of a sample, (3) neutron radiography for the nondestructive inspection of aircraft and weapon components and the detection of low-Z materials, (4) fissile material and TRU waste analyses, (5) reactor fuel rod scanning to assess enrichment and uniformity, (6) start-up sources for nuclear reactors, and (7) cancer therapy and research.

Currently there are more than 100 formal loan agreements with 65 institutions for some 235 neutron sources containing 200 mg of ^{252}Cf. The loanee institutions consist of 18 DOE units and/or management and operating contractors, 7 other U.S. government agencies, nearly 40 educational and medical institutions (including one each in Japan and Germany), and 2 private research institutions doing contract research and development for government agencies.

Californium-252 enters the commercial market by sale of "bulk" material to one of four fabricator/distributors in the United States and two overseas. The commercial use of ^{252}Cf over the last several years has been in the range of 15 to 25 mg per year. However, new applications are continuing to be developed i.e., the detection of unexploded ordinance, and the demand for ^{252}Cf could increase significantly in the future.

III. PRODUCTION AND DISTRIBUTION OF RADIOISOTOPES AND ENRICHED STABLE ISOTOPE PRODUCTS

A significant part of the ORNL program is the Isotope Distribution Office (IDO), through which sales, leases, loans, etc., are made. Operation of the IDO enables a current understanding of the role of ORNL-produced isotopes in the worldwide supply-and-demand picture. As shown in Fig. 2, the ORNL-produced isotopes consist of (1) electromagnetically separated enriched stable isotopes (EM stable) previously produced in the Calutrons; (2) non-EM stable enriched isotopes; (3) radioisotopes, and (4) heavy elements. In addition, technical services are provided primarily to produce a special chemical or physical form of the isotope product to meet the specific needs of customers. Fig. 2 illustrates the distribution of sales during the period between 1990 and 1998 to domestic and foreign customers.

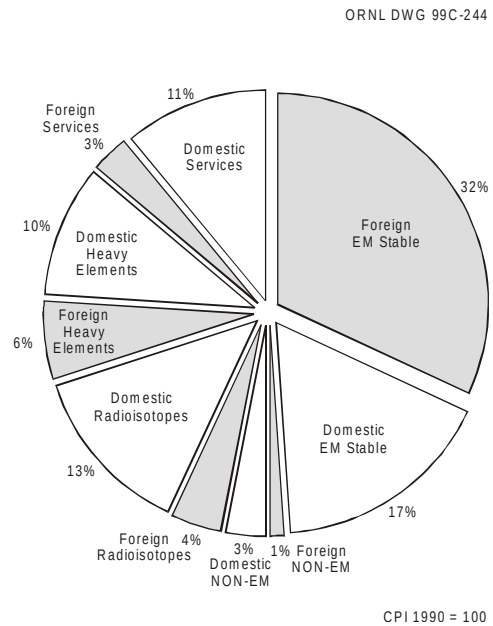

Fig. 2. Isotope sales: 1990-1998.

The DOE Office of Isotope Programs (referred to as "the Isotope Program") produces and sells radioactive isotopes from ORNL and other DOE sites. As a government-sponsored program, the goals are to provide a reliable supply of quality products and services based on customer needs and to develop new isotope applications to meet future national and international research needs. The Isotope Program provides those isotopes and services that are not readily available from private commercial sources or for which the supply does not adequately meet national needs. The ORNL Isotope Program attempts to provide all isotopes and services requested, subject to production capability, inventory stock, and financial restraints.

A. Recent Demands

Sales revenues obtained for the various categories of ORNL-produced isotopes and technical services are shown in Fig. 3 for recent years (1990 through 1998). As shown in Fig. 3(a), revenues from EM stable isotopes are characterized by three peak years. The peaks in 1990 and again in 1995–1997 were dominated by sales of enriched ^{203}Tl, which is used as target material in the cyclotron production of the heart-imaging agent ^{201}Tl. The peaks in 1992 and 1993 were predominantly due to (1) the interdepartmental DOE sales of large quantities of research isotopes, primarily a single crystal of ^{57}Fe

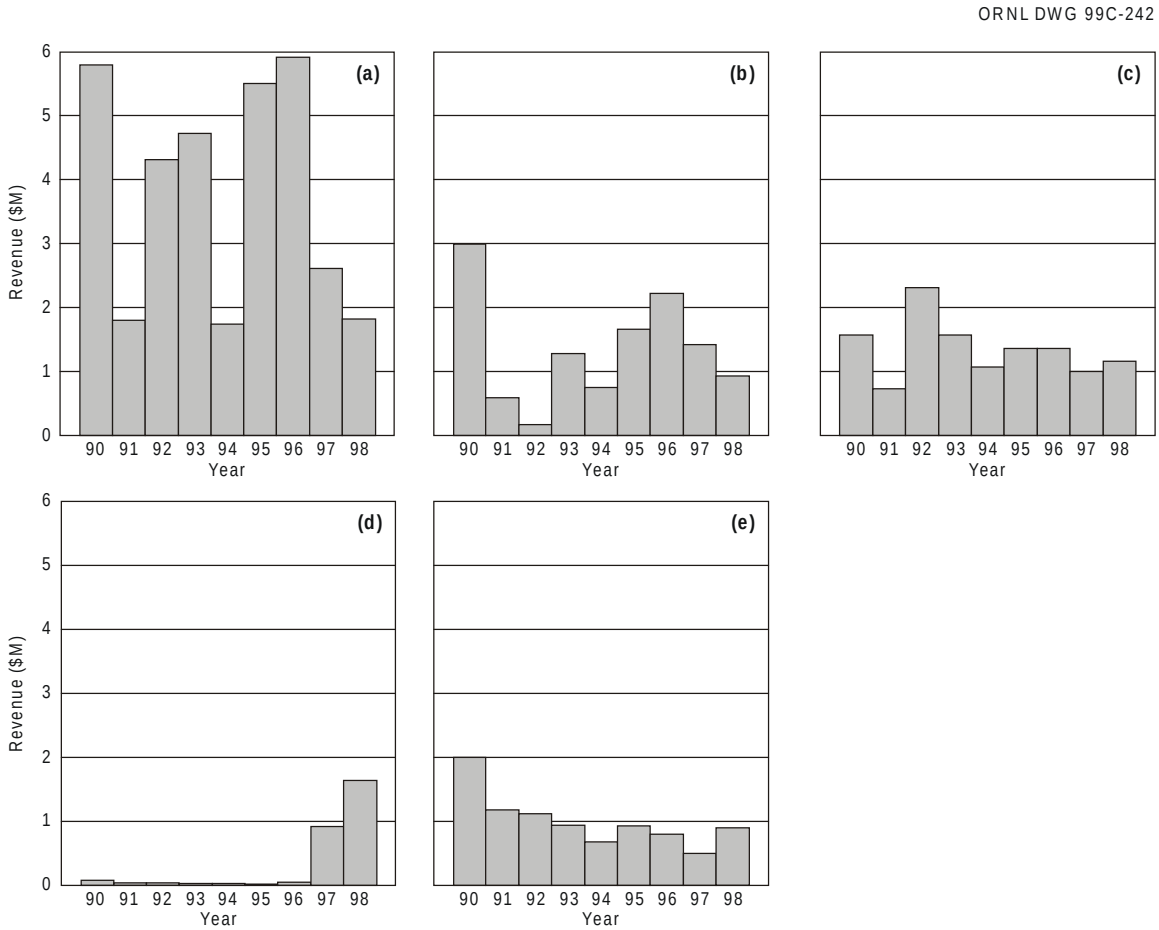

Fig. 3. Recent isotope production sales and services: (a) EM stable isotopes, (b) radioisotopes, (c) heavy elements, (d) non-EM stable isotopes, and (e) technical services.

used to enhance neutron scattering capabilities in the HFIR, and (2) the sale of multikilograms of ^{88}Sr for use as a reactor target in the production of ^{89}Sr, a pain-relief agent for cancer patients. The stable level of $1.5 to $2 million in revenue during each year was from multihundreds of sales of over 200 different enriched stable isotopes, predominantly for research applications in chemistry, physics, geology, nutrition, and environmental sciences. Larger amounts of research isotopes are frequently needed and if the application is nondestructive, the isotope is often leased and later returned to the ORNL inventory after use and repurification. Revenues from leases are included in the technical service category.

The peak revenue of radioisotopes in 1990, as shown in Fig. 3(b), was primarily from the sales of ^{3}H, ^{85}Kr, and ^{137}Cs, which are no longer produced by DOE. The revenues from radioisotopes during 1992 through 1998 were predominantly from the sale of ^{192}Ir, for use in gamma radiography sources. The production of ^{192} Ir in the ORNL HFIR during 1993 through 1996 was coordinated with production in the Advanced Test Reactor at Idaho National Engineering and Environment Laboratory (INEEL) to provide a more dependable supply schedule; however, the INEEL production has now been privatized and ORNL production has diminished.

The revenue from the sale of heavy elements, as illustrated in Fig. 3c, is primarily from the sales of bulk ^{252}Cf to the private sector fabricators of neutron sources. As described above, the amount of ^{252}Cf sold has remained consistently in the range of 15 to 25 mg per year.

Non-EM stable isotope sales revenues, as shown in Fig. 3(d), were predominantly from small amounts of ^{6}Li and ^{7}Li during the period 1990 through 1995. In 1996, sales of ^{3}He, previously produced at Mound Laboratory and now in the ORNL inventory, increased the non-EM stable revenues significantly.

B. Future Demands

Forecasting demand for many single isotopes is difficult, if not impossible, because occurrence of discrete events is unpredictable, such as the discovery of a new pharmaceutical application. However, considering current known sales and supply, some forecasts can be made for the various categories of isotopes and, in some cases, for single isotopes.
ORNL has significant inventories of EM stable isotopes. This inventory will allow for continued sales of most of these isotopes. However, in the future, some of these isotopes will increasingly be in short supply. Foreign producers exist, but the stability of that supply for future needs is not known.
The major non-EM stable isotope is ^{3}He. The current supply will be exhausted by the end of fiscal year 1999. A continued supply of this isotope is uncertain from the DOE.

Stable isotope technical services include the production of foils, thin films, sources, and other special forms customized to meet customer needs. These services will continue from ORNL as long as the need exists.

The future demand for ORNL-produced radioisotopes also remains unpredictable. The next five years will likely be characterized by a great deal of uncertainty with respect to sales. This inability to accurately forecast the future will be based on specific situations that have arisen or will be arising. Demand for ORNL-produced ^{192}Ir remains to be diminished. The increased world supply, with little change in world demand, has decreased the market price below that needed by ORNL to produce the material. In addition, the HFIR will be shutdown for 6-8 months in the year 2000; this will also impact on ORNL's ability to consistently supply ^{192}Ir. Customers of this material typically make purchasing decisions on the basis of reliability of supply and price. They change suppliers as the conditions dictate.

C. Emerging Medical and Industrial Isotopes

Currently, the emerging medical and industrial isotopes produced at ORNL include ^{188}W–^{188}Re and high-specific-activity ^{192}Ir for uses in cancer-tumor therapy and cardiology (antirestenosis following balloon angioplasty), ^{117m}Sn for cancer therapy, ^{225}Ac–^{213}Bi generator for alpha radioimmunotherapy of various types of cancer, and ^{123m}Te as a calibration line source. Also emerging is ^{87}Rb, which is a naturally occurring radioisotope, enriched in the Calutrons and used in the rapidly growing areas of cellular telephone and geopositioning systems. The demands for these isotopes are currently increasing and could increase exponentially in the future.

IV. FUTURE CAPABILITIES FOR ISOTOPE PRODUCTION

Research and development, maintenance, improvement, and potential expansion of specialized ORNL isotope production facilities are the keys to having the capability to meet future needs. The key facilities include the HFIR, the REDC and RDL hot cell facilities, the Isotope Enrichment facilities (Calutrons and plasma separations process), and the IRML.

A. High Flux Isotope Reactor

Although the HFIR has a flux trap core (Fig. 4) that was designed and built especially for the production of heavy elements and other radioisotopes, [1] the current major use is for neutron scattering research and development using the four

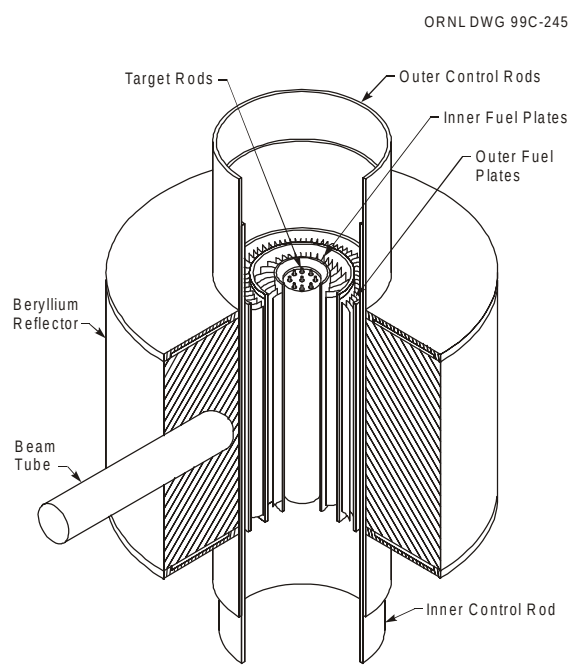

Fig. 4. Schematic illustration of the HFIR.

horizontal beam facilities in the reactor (Fig. 5). Most of the current and planned upgrades and the expected lifetime of the reactor are dependent on the

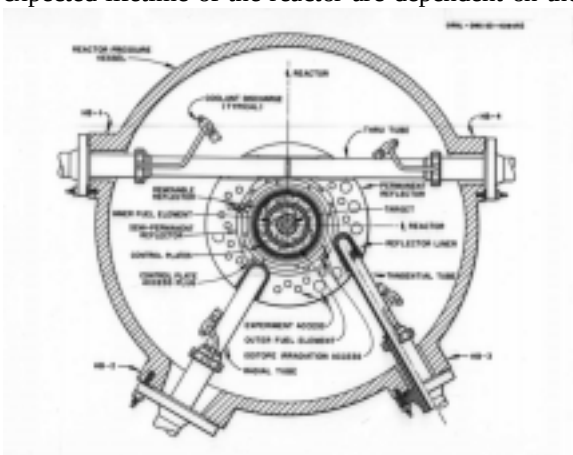

Fig. 5. Cross section of the HFIR pressure vessel at horizontal midplane, showing orientation of beam tubes with respect to the core and

neutron scattering programs. For example, recent analyses[2,3] associated with plans to install a cold neutron source and to enlarge the existing beam tubes and increase the intensity of the neutron beams have indicated that the lifetime of the existing reactor vessel can be at least 50 effective full-power years. After the scheduled 6-month shutdown in the year 2000 to replace the beryllium reflector, a return to the 100-MW operating power level is planned. At this power level, the limit of 50 effective full-power years will allow the reactor to operate until the year 2035.

Isotope production, materials irradiation R&D, and neutron activation analysis are all parallel users of the HFIR. All of these programs, including neutron scattering, favor maximum availability and dependability of operation. Because of maintenance and regulatory requirements as well as funding limitations, the HFIR is currently scheduled for a 60% operating time, which is equivalent to 10 operating periods of 22 days each year.

Several isotope production upgrades have been made recently or are planned for the reactor core. As shown in Fig. 6, the HFIR core currently contains 30 target positions, one hydraulic tube (HT), and six peripheral target positions (PTPs). The hydraulic tube is used to irradiate small samples containing up to 3-4 g of target material (depending on heat limitations) and allows access to load or unload the targets while the reactor is operating. This capability

ORNL DWG 99C-243

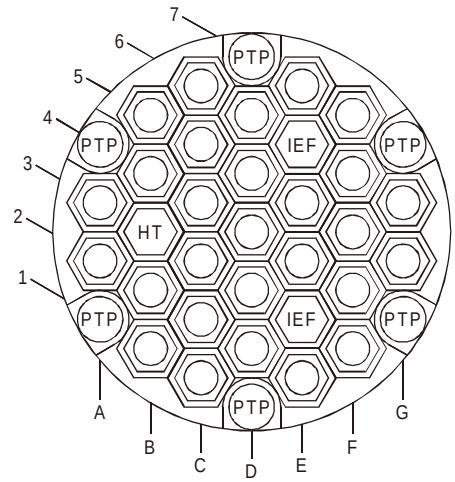

HT: Hydraulic Tube
PTP: Peripheral Target Position
IEF: Instrumented Experimental Facilities

	Radial Distance from Reactor Vertical Centerline (cm)
C3, C4, D3, D5, E4, E5	1.689
B3, C2, C5, E3, E6, F5	2.926
B2, B4, D2, D6, F4, F6	3.378
A2, A3, B1, B5, C1, C6, E2, E7, F3, F7, G5, G6	4.465
A1, A4, D1, D7, G4, G7	5.067

Fig. 6. Irradiation positions in the HFIR.

is especially useful to produce isotopes requiring short irradiations or more frequent demand than end-of-cycle access permits. These are characteristics of many research and medical isotopes; thus, the HT facility is often oversubscribed. To increase the capability for small-sample irradiation, target holders for the six PTPs were recently installed to allow irradiation of HT-type capsules when on-line access is not required. An added benefit of the PTPs for some isotope productions is the increased fast flux at the core periphery, which reaches 1.0×10^{15} neutrons/cm^2-s at the reactor centerline. Also, to increase on-line capacity, plans are to convert the two positions labeled "IEF" in Fig. 6 to two additional hydraulic tubes.

Originally, when the target material for heavy element production was ^{242}Pu, all 30 target positions were continually required. However, heavier curium isotopes containing ^{246}Cm and ^{248}Cm are now available as target material and fewer target positions and less irradiation time are needed. Thus, the HFIR target positions are now undersubscribed.

B. REDC and RDL Hot Cell Facilities

REDC Building 7920 (Fig. 1) contains remotely operated and maintained hot cell facilities for

chemical processing of irradiated targets and fabrication of new curium targets for irradiation in the HFIR, as described above in the discussion of Transuranium Element Radioisotopes. These cells are uniquely shielded and contained to enable the handling of alpha, beta-gamma, and neutron emitting radioisotopes, such as ^{252}Cf. Since beginning operations in 1966, the processing equipment has been upgraded and replaced several times to enable new capabilities and improved performance. In 1993, a new dry storage facility was added to enable storage and processing of large targets irradiated at the SRS. Similarly, a new dry storage facility is planned for addition to REDC Building 7930 to permit the storage of americium-curium feedstocks produced at the SRS. Moreover, REDC 7930 is under active consideration to store ^{237}Np feedstocks, fabricate targets, and process irradiated targets for the production of 5 to 10 kg per year of ^{238}Pu for use in radioisotope thermoelectric generators. If it is selected for this project, REDC 7930 will undergo significant expansion of its processing equipment.

The RDL hot cell facility also provides unique capabilities to the ORNL Isotope Production Program. This facility contains four beta-gamma hot cells that are essential to the production of medical and industrial isotopes produced in the HFIR. The RDL also contains one alpha-contained, shielded hot cell that is currently dedicated to the periodic "milking" of ^{225}Ac from the ORNL ^{229}Th "cow" and to the fabrication of ^{225}Ac–^{213}Bi generators for distribution to several medical research institutions.

C. Enriched Isotope Facilities

The 30 ORNL calutrons used to separate and enrich about 250 different stable isotopes were again placed in standby condition in January 1998 because of (1) the worldwide oversupply capability for producing enriched stable isotopes, which has existed for many years; (2) the diminished revenues available from the "buyer's market"; and (3) the loss of market to foreign suppliers resulting from competitive pricing and lower costs of production in countries with differing economic conditions. Also, the increased availability of gas-centrifuge-produced isotopes has contributed to the oversupply situations. Unless government-sponsored programs can create a need for continued use of the ORNL calutrons or a government decision is made to maintain a domestic production capability, future use of the ORNL calutrons may not be possible.

On the brighter side, the plasma separations process equipment, which has been in storage at ORNL for several years, has been leased to a private sector company for captive use. There will be excess production time available for production and sales of other enriched stable isotopes.

D. Isotope Research Materials Laboratory

The IRML is known worldwide for its capabilities to perform custom-order chemical and physical form preparations for isotope customers, particularly in accelerator physics research. A wide range of metallurgical, ceramic, and high-vacuum materials preparations are performed for both enriched stable isotopes and radioisotopes. These capabilities, together with access to the ORNL inventory of isotopes, provide a unique ability to serve the user community. Government-subsidized funding to support the IRML was diminished significantly about ten years ago, and the capabilities were almost lost. However, by consolidating program activities, the capabilities have been partially restored.

The materials laboratories were consolidated into the Isotope Enrichment Facility and incorporated with the Chemistry and the Packaging and Shipping operations to form a Products and Services capacity. The current capabilities include general wet chemistry, thin foil to thick plate rolling, arc melting and alloying, reactive metal rolling (under argon), wire rolling/swaging/drawing, hot and cold rolling, high-vacuum evaporation, reduction/distillation, metal and ceramic powder consolidation, induction melting, neutron-dosimeter fabrication, radio frequency plasma sputtering, and selected gas reactions (isotopic inorganic) planar magnetron sputtering compound preparation—oxides, fluorides, etc.

As capabilities were restored, the number of customers requesting these services has increased and is expected to increase further in the future. The facilities and capabilities of this group are also used throughout the ORNL isotope program and other materials-related programs on a collaborative basis, as needed. An important example is the preparation of stable isotopes in appropriate forms to serve as reactor targets or precursors for radioisotope production.

V. NEW TECHNOLOGY DEVELOPMENTS

During the past few years, several new technological developments have been made at ORNL. These include concentrator/purifier devices for use with ^{99m}Tc and ^{188}Re solutions, the ^{123m}Te line source for ^{99m}Tc detector calibration, and new methods for fabricating very small beads and wires

for enriched ^{191}Ir for use as a target to produce high-specific-activity ^{192}Ir. Some of these new technologies have been patented and licensed to the private sector for commercialization. The modular ^{99m}Tc concentrator received one of the 1997 R&D 100 Awards. Additional recent developments include extraction of ~100 mCi of ^{229}Th from the legacy waste of ^{233}U processing, providing a monthly supply of ~20 mCi of ^{225}Ac for medical use.

REFERENCES

1. S. Mirzadeh, R. E. Schenter, A. P. Callahan, and F. F. Knapp, Jr., "Production Capabilities in U.S. Nuclear Reactors for Medical Radioisotopes," Oak Ridge National Laboratory, ORNL/TM-12010 (November 1992), pp. 3.5.1–3.5.27.

2. R. D. Cheverton and T. L. Dickson, "HFIR Vessel Life Extension with Enlarged HB-2 and HB-4 Beam Tubes," Oak Ridge National Laboratory, ORNL/TM-13698 (December 1998).

3. D. L. Selby, et al., "High Flux Isotope Reactor Cold Neutron Source Design Concept," Oak Ridge National Laboratory, ORNL/TM 13498 (May 1998).