Paper Presented at the Third European Symposium on Antinucleon Nucleon Interactions, Stockholm, Sweden July 9-14, 1976.

CONF-760725--1

BNL-21621

STUDY OF LOW MASS $\bar{p}p$ PAIRS PRODUCED IN n - Be INTERACTIONS*

A.S. Carroll, I-H. Chiang, T.F. Kycia, K.K. Li, L. Littenberg and P.O. Mazur†
Brookhaven National Laboratory, Upton, New York 11973
J.P. de Brion‡ and W.C. Carithers§
University of Rochester, Rochester, New York 14627

ABSTRACT

A search has been conducted for narrow resonances in the $\bar{p}p$ mass spectrum from threshold to 2700 MeV in a production experiment. Mass spectra of the K^+K^- and K^-p states have also been extracted from the data, and known resonances have been used to check the mass resolution. With a sample of 8393 $\bar{p}p$ pairs, no statistically significant narrow structures have been observed.

INTRODUCTION

With the discovery of the narrow $J/\psi(3109)$[1,2,3] and $\psi'(3695)$[4] states much interest has been aroused in the possible existence of other narrow resonances. The $\bar{p}p$ system appears to be a particularly interesting one to study since it is a fermion-antifermion system in which at least one 9 MeV wide resonance at 1930 MeV[5] has been found, and several others have been suggested.[6] Since the search for low mass $\bar{p}p$ states in formation experiments is impeded by the large ionization loss of low energy antiprotons, it was thought that a production experiment could prove to be a valuable technique. Using a multiwire proportional chamber (MWPC) spectrometer designed for studying K^o_L decays,[7] a search has been made for new structures in the $\bar{p}p$ mass range from threshold to 2700 MeV produced in the interaction of neutrons on beryllium. The acceptance was such that masses below 2000 MeV were emphasized. Simultaneously data was collected on K^+K^- and K^-p states.

The experiment was carried out at the Brookhaven AGS in a 4.7° neutral beam. Three collimators defined a solid angle of 1&. ster, and 8 radiation lengths of lead and two sweeping magnets cleared the beam of photons and charged particles. There were approximately 10^7 neutrons per pulse between $\bar{p}p$ production threshold at 6.7 GeV/c and the maximum momentum of ~ 19.5 GeV/c; 10^6 K^o_L above 2 GeV/c; and an estimated 10^5 anti neutrons above 2 GeV/c.

---

*Work supported by the U.S. Energy Research and Development Administration.

†Present address: Fermi National Accelerator Laboratory, Batavia, Illinois 60510

‡Present address: CEN-SACLAY, 91190 Gifsur Yvette, France.

§Present address: Univ. of California, Lawrence Berkeley Laboratory, Berkeley, California 94720

NOTICE
This report was prepared as an account of work sponsored by the United States Government. Neither the United States nor the United States Energy Research and Development Administration, nor any of their employees, nor any of their contractors, subcontractors, or their employees, makes any warranty, express or implied, or assumes any legal liability or responsibility for the accuracy, completeness or usefulness of any information, apparatus, product or process disclosed, or represents that its use would not infringe privately owned rights.

MASTER

CONTRACT NO. E(30-1)-16
DISTRIBUTION OF THIS DOCUMENT IS UNLIMITED

Figure 1 shows the experimental arrangement. The 5000 wire MWPC spectrometer system from chamber "A" to chamber "D" has been described previously.[7] With the magnetic field set for a transverse momentum of 214 MeV/c, the system has a resolution of 2 MeV for $K^0_L \rightarrow \pi^+\pi^-$ decays. A target of beryllium, 5 cm in thickness, 15 cm in width and 20 cm in height was placed in the netural beam. Scintillation counters A_1 and B_1 on either side of the target, were used to require a neutral incident particle and at least one charged outgoing particle.

A threshold gas Cerenkov counter C_e filled with ethylene to a pressure of 6.8 atmospheres was inserted between the target and the first MWPC. It had an index of refraction of 1.005 and rejected pions above 1.4 GeV/c. Further rejection of fast particles was achieved by a second Cerenkov counter filled with butane at one atmosphere (pion threshold of 2.8 GeV/c).

The trigger was $\bar{A}_1\ B_1\ \bar{C}_e\ \bar{C}_b$ together with the requirement that there be two and only two tracks detected in the 3 MWPC, and that there be two or more particles detected in the lead glass matrix and in the timing counters between the front wall of lead glass and the lead glass matrix.

Time of flight over a 16.9 meter path and Cerenkov counter information were used to select $\bar{p}p$ pairs from the background of other types of hadron pairs. Above 5.4 GeV/c the Cerenkov counter provided good rejection against both pions and kaons, so that all particles with the correct timing above this momentum were identified as protons or anti-protons. The high accidental rate of pions lead to a cut on all particles below 1.5 GeV/c. Below 5.4 GeV/c and above 1.5 GeV/c very stringent requirements are placed on the timing to keep the contamination below a few per cent. The cuts are more stringent for the antiprotons than for protons, due to the very low production of $\bar{p}$, and to the fact that a p is much more likely to be associated with a K^- than an $\bar{p}$ with a K^+.

The standard deviation on the measured time of flight as shown in Fig. 2 was 0.64 nsec. In order to have sufficiently good rejection against kaons it was necessary not only to have the correct timing for $\bar{p}$ but to be well away from the correct timing for K^-. The placement of these cuts is illustrated in Figs. 2a to 2d for various bands of momenta and shows that the $\bar{p}$ acceptance goes to zero above 3.5 GeV/c. The selection criteria are summarized in Table I.

In principle the lead glass provided additional antiproton identification since annihilations in the lead glass can produce larger energy depositions than pion or kaon interactions. In practice the loss in event statistics (factor of 2) needed for significant reduction in contamination (~ factor of 2) did not make this technique viable in this experiment.

Fig. 3a and 3b show the mass spectra for K^+K^- and K^- pairs. The strong presence of the $\phi(1019)$ which is K^+K^- resonance just above threshold enables us to determine our experimental mass resolution with the multiple scattering in the target and Cerenkov counters. The full width at half height is 8 MeV, of which 7 MeV is due to the resolution.

The effective mass spectrum of 8393 $\bar{p}p$ events with the cuts listed in Table 1 and without corrections for acceptance is shown in Fig. 4.

Using a phase space model and a production cross section that rises with incident neutron momentum like the cube of the available center of mass kinetic energy the acceptance and corrected spectrum are shown in Fig. 5. Although

there are suggestions of peaks on the previously observed mass of 1930 MeV,[5] and at 1945 and 1957 MeV, a smooth polynomial curve passed through these points has a chi-squared probability of 10%.

In addition to the $\bar{p}p$ pairs we have a small sample of $\bar{p}p\gamma$ (~ 200 events) from the analysis of photons in the lead glass. No significant structure is seen in this mass distribution.

TABLE 1 Summary of Selection Criteria for $\bar{p}p$ pairs

Momentum Interval (GeV/c)	p	$\bar{p}$
0 - 1.5	no acceptance	no acceptance
1.5 - 5.4	$\lvert\tau_{meas} - \tau_p\rvert < 1.5$ ns	$\lvert\tau_{meas} - \tau_{\bar{p}}\rvert < 1.0$ ns
	$\lvert\tau_{meas} - \tau_{K^+}\rvert < 1.0$ ns	$\lvert\tau_{meas} - \tau_{K^-}\rvert < 2.1$ ns
5.4 → 9.3	no C_e	no C_e
	$\lvert\tau_{meas} - \tau_p\rvert < 1.5$ ns	$\lvert\tau_{meas} - \tau_{\bar{p}}\rvert < 1.0$ ns

REFERENCES

1. J.J. Aubert et al. Phys. Rev. Lett. 33, 1404 (1974).
2. H.-E. Augustin et al. Phys. Rev. Lett. 33, 1406 (1974).
3. C. Bacci et al. Phys. Rev. Lett. 33, 1408 (1974).
4. J.-E. Augustin et al. Phys. Rev. Lett. 33, 1453 (1974).
5. A.S. Carroll et al. Phys. Rev. Lett. 32, 247 (1974).
6. T.E. Kalogeropoulos et al. Phys. Rev. Lett. 34, 1047 (1975).
7. W.C. Carithers et al. Phys. Rev. Lett. 30, 1336 (1973).

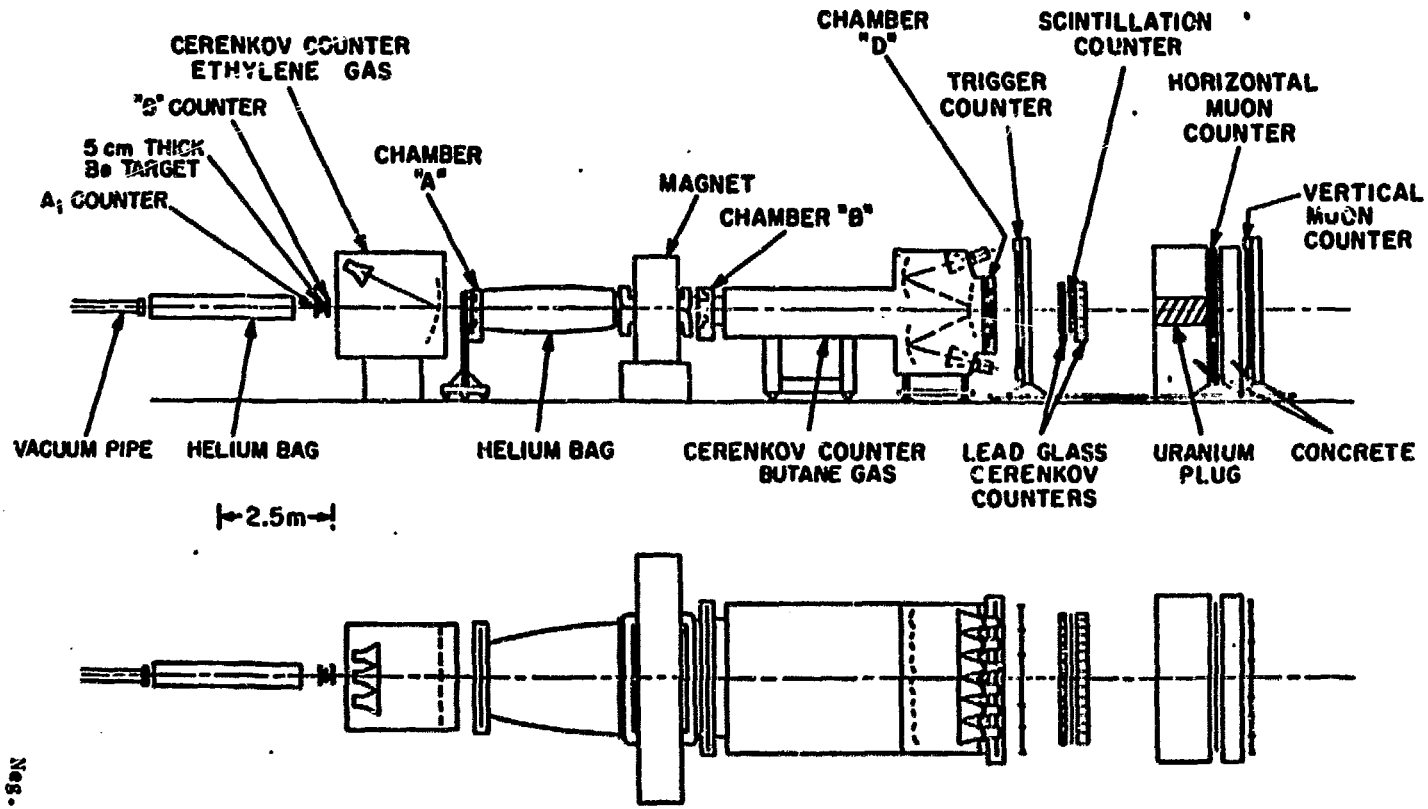

Fig. 1. Side and top views of experimental apparatus.

Neg. #5-590-76

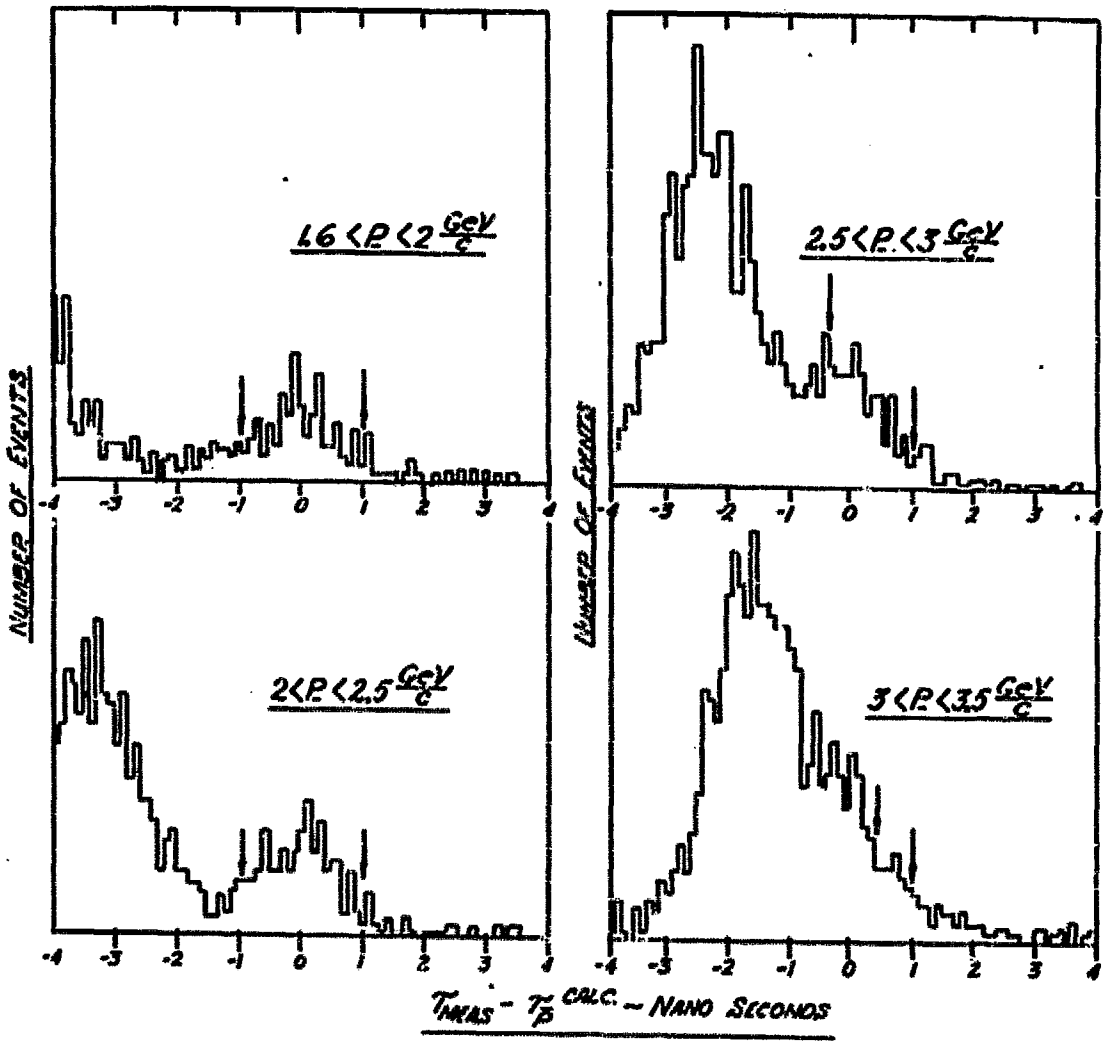

Fig. 2. Time of flight distributions for 4 different momentum bands from 1.6 to 3.5 GeV/c.

Neg. #7-0030-76

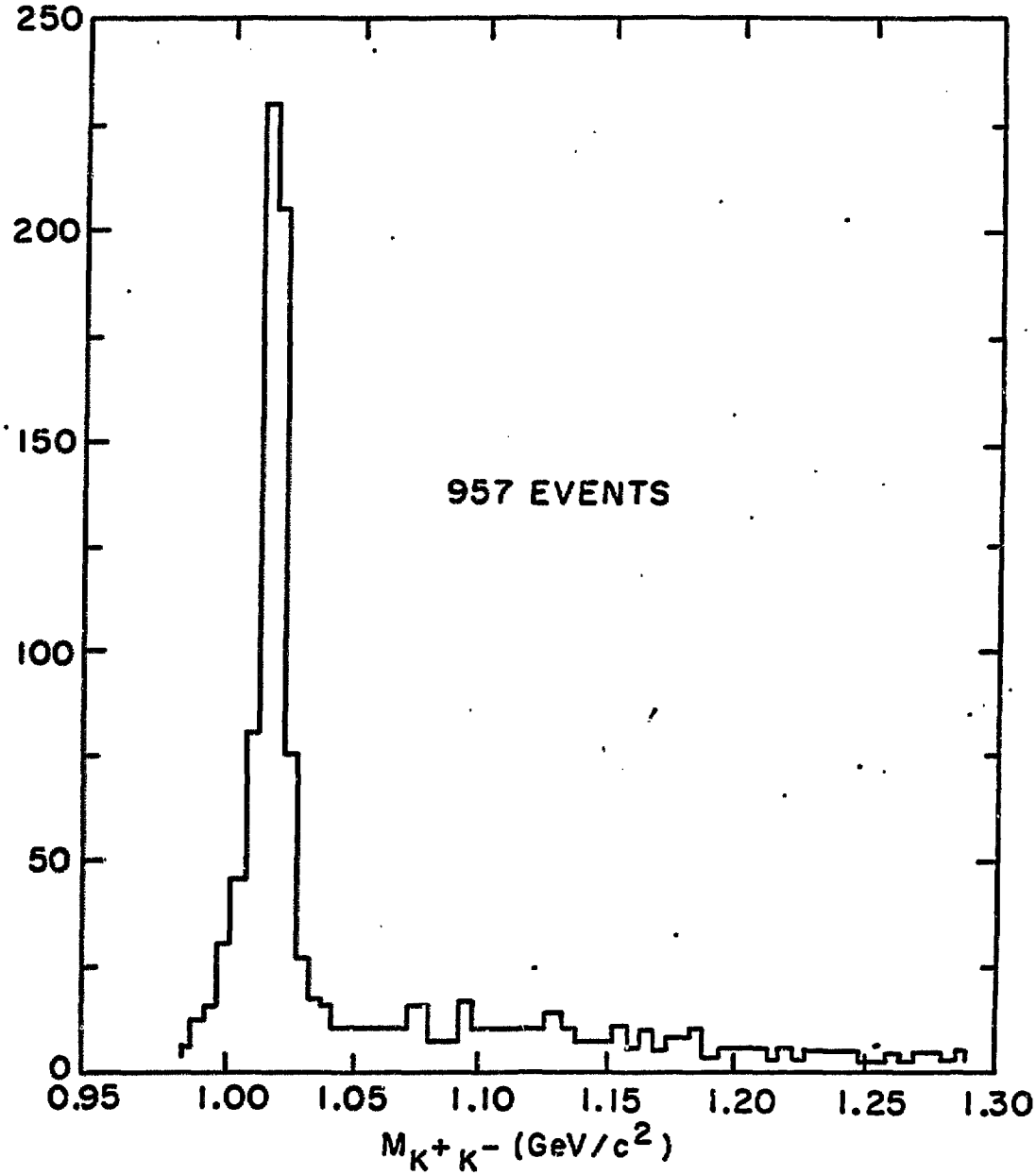

Fig. 3a. Mass spectrum in 5 MeV bins for K^+K^- pairs. FWHM for $\phi(1019)$ is 8 MeV.

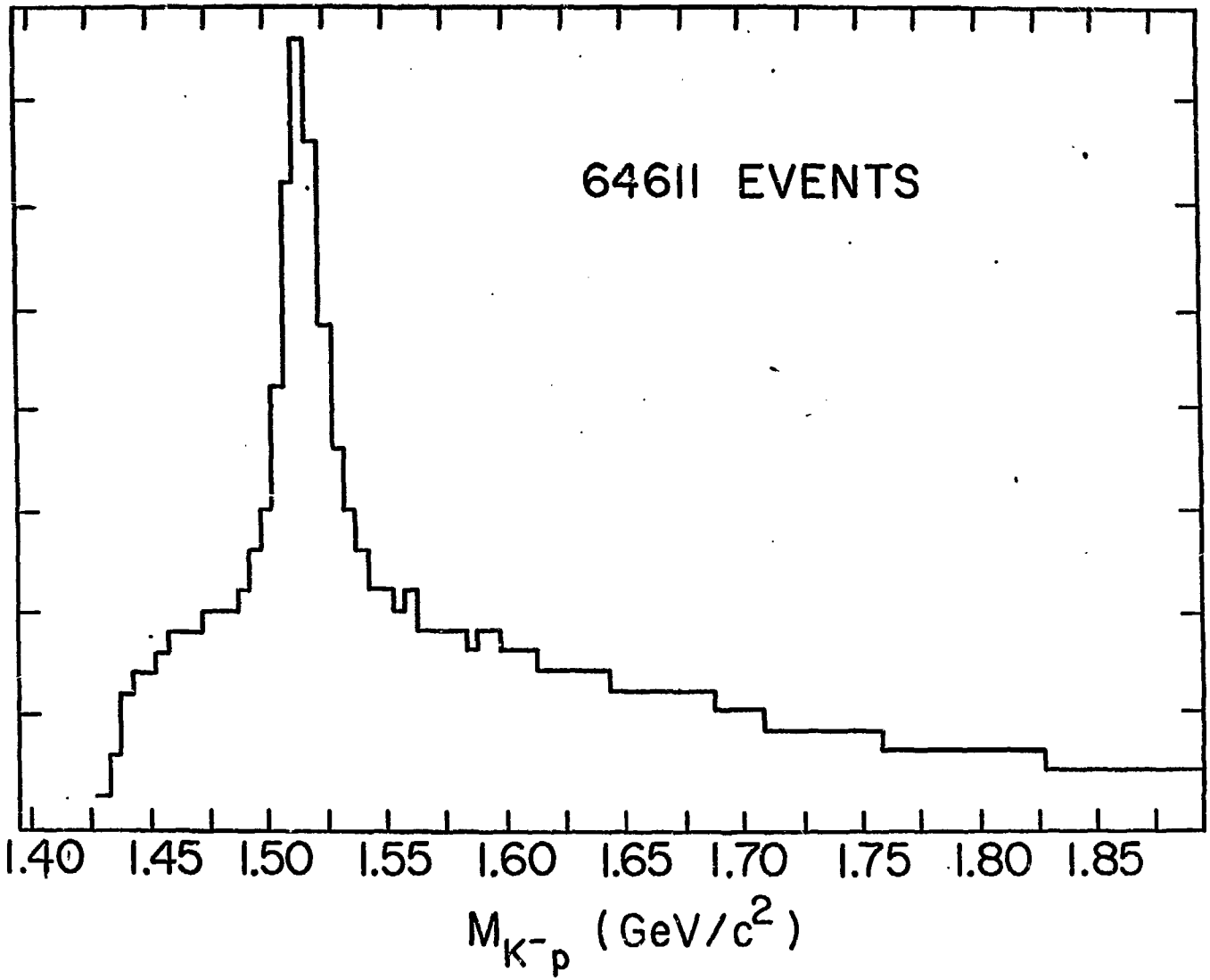

Fig. 3b. Mass spectrum in 5 MeV bins for K^-p pairs. Prominent peak is due to $\Lambda(1520)$ resonance.

Neg. #7-0033-76

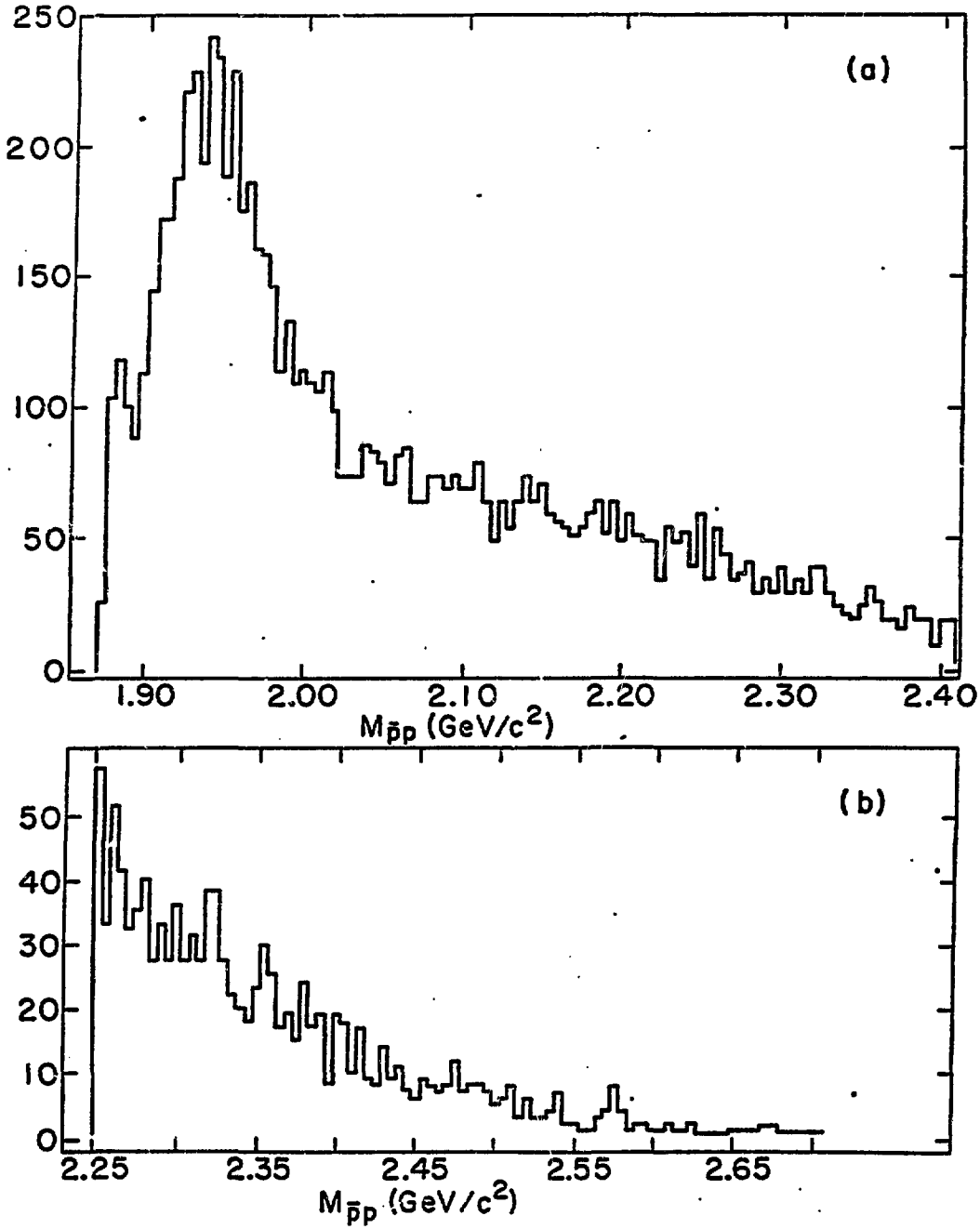

Fig. 4a. $\bar{p}p$ mass spectrum not corrected for acceptance in 5 MeV bins, from 1.876 to 2.45 GeV/c^2.

4b. $\bar{p}p$ mass spectrum from 2.25 to 2.70 GeV/c^2.

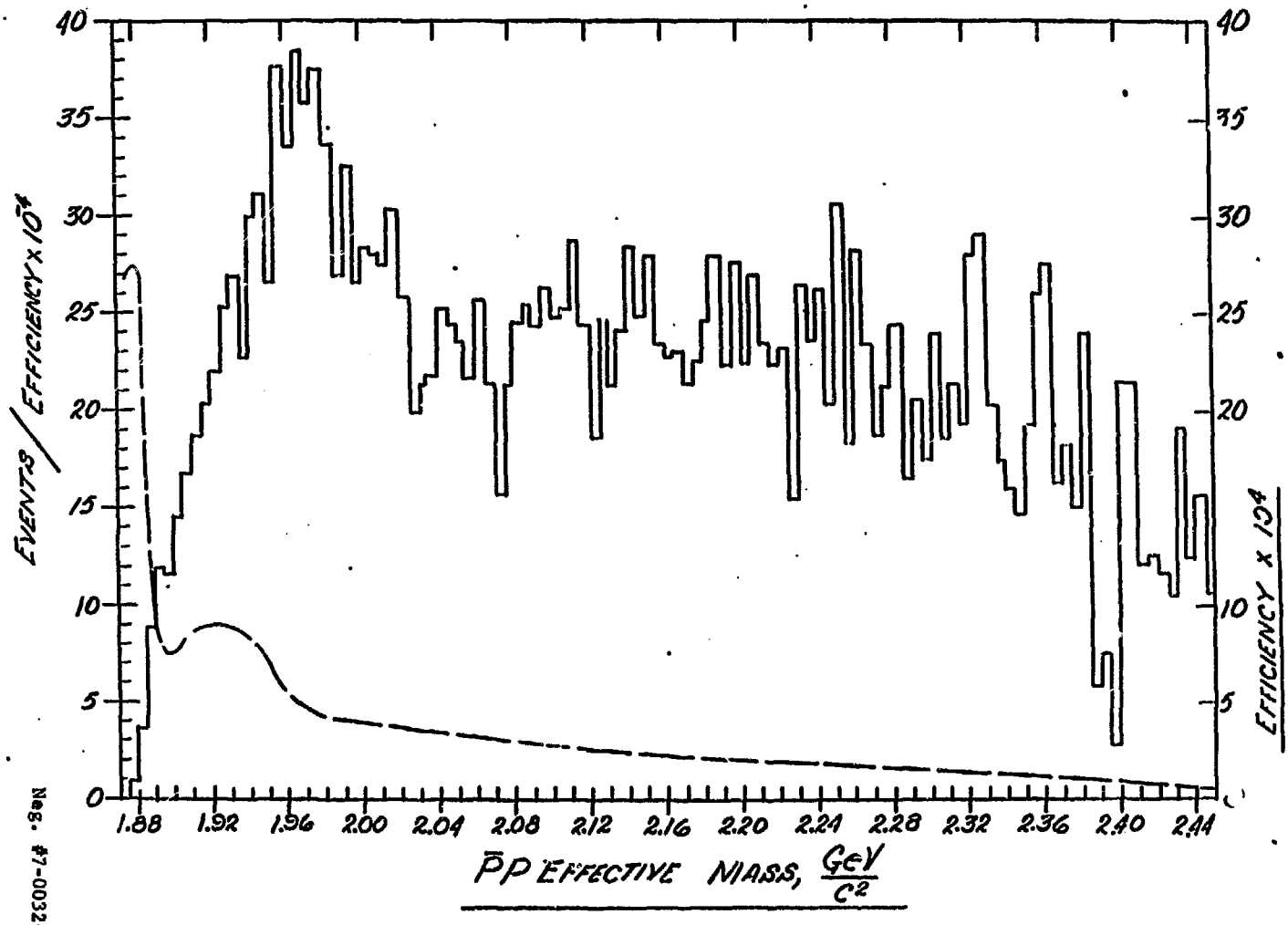

Neg. 47-0032-16

Fig. 5 . Efficiency as calculated by Monte Carlo, and the corrected $\bar{p}p$ mass spectrum