To be presented at the Eleventh
Intersociety Energy Conversion Engineering
Conference, ~~Lake Tahoe~~ Las Vegas, NV,
September 12 - 17, 1976

LBL-4454

CONF-760906--18

THE USE OF PROGRAM GEOTHM TO DESIGN AND OPTIMIZE GEOTHERMAL POWER CYCLES

H. S. Pines and M. A. Green

June 1976

Prepared for the U. S. Energy Research and
Development Administration under Contract W-7405-ENG-48

LAWRENCE BERKELEY LABORATORY
UNIVERSITY OF CALIFORNIA
BERKELEY

MASTER

LBL-4454

DISTRIBUTION OF THIS DOCUMENT IS UNLIMITED

DISCLAIMER

This report was prepared as an account of work sponsored by an agency of the United States Government. Neither the United States Government nor any agency Thereof, nor any of their employees, makes any warranty, express or implied, or assumes any legal liability or responsibility for the accuracy, completeness, or usefulness of any information, apparatus, product, or process disclosed, or represents that its use would not infringe privately owned rights. Reference herein to any specific commercial product, process, or service by trade name, trademark, manufacturer, or otherwise does not necessarily constitute or imply its endorsement, recommendation, or favoring by the United States Government or any agency thereof. The views and opinions of authors expressed herein do not necessarily state or reflect those of the United States Government or any agency thereof.

DISCLAIMER

Portions of this document may be illegible in electronic image products. Images are produced from the best available original document.

THE USE OF PROGRAM GEOTHM TO DESIGN AND OPTIMIZE GEOTHERMAL POWER CYCLES

H. S. Pines and M. A. Green
Lawrence Berkeley Laboratory, University of California
Berkeley, California 94720

Abstract

The Lawrence Berkeley Laboratory program GEOTHM has been under development for nearly two years. GEOTHM will design and optimize a wide variety of thermodynamic cycles. The most recent improvements in the GEOTHM program are included in this paper. These improvements include: a model for concentrated saline brines and a single step cycle optimization process. Geothermal power cycles are given as examples.

INTRODUCTION

This paper is the third in a series of papers which describes the development of program GEOTHM.[1,2] GEOTHM is a thermodynamic process computer program which can model and design a wide variety of thermodynamic process cycles. The program name GEOTHM reflects the fact that the Lawrence Berkeley Laboratory Geothermal Energy Program has provided the funding for the development of the computer model.

GEOTHM is a versatile thermodynamic cycle simulator for a number of reasons:

(1) The thermodynamic processes are modularized into fundamental building blocks. These blocks may be arranged and rearranged in many different ways.

(2) The calculation of the fluid thermodynamic properties is separated from the thermodynamic process calculation.

(3) The program is fast. A typical geothermal power plant cycle calculation requires less than 300 ms of CPU time to perform on a CDC 7600.

(4) The thermodynamic cycle generator can be used like a function generator which can be driven by a mathematical optimizer which optimizes certain features of the cycle.

GEOTHM's major disadvantage is its size. The program has over 70 subroutines and it consists of over 6000 Fortran statements. Since the program is flexible, facility in the use of the input-output routines of GEOTHM requires an initial orientation period. The thermodynamic process routines of GEOTHM can be used to simulate various types of power plant components; these include: turbines, pumps, compressors, fans, mixing tanks, throttling valves, flash tanks, phase separators, scrubbers, cascade evaporators, heat exchangers, dry cooling towers, and wet cooling towers. The program will design components in sufficient detail so that a reasonable cost estimate can be made. Since the process routines are modularized new equipment models can be developed.

The largest part of the GEOTHM program is devoted to the calculation of working fluid thermodynamic properties. GEOTHM uses several equations of state to describe the properties of over 30 pure substances. These calculations are made using two forms of the Martin equation of state,[3,4] the Starling equation of state,[5] and the Keenan and Keyes equation of state for water.[6] In addition, one can use a number of simple equations of state to describe other fluids in more restricted thermodynamic regimes.

Improvements of GEOTHM have been made in two primary areas: (1) the calculation of the properties of concentrated brines and (2) the optimization of thermodynamic cycles. The calculation of brine properties and optimization procedures will be discussed in this paper. Substantial improvements have been made in various convergence and iteration routines in GEOTHM. As a result, large reductions of computer process time have been achieved.

PROPERITES OF CONCENTRATED SALINE BRINES

Some geothermal fields in the Imperial Valley of California are characterized by extremely high concentrations of dissolved salts. These geothermal waters, which can be found at temperatures as high as 360°C, have dissolved solid concentrations as high as 350,000 parts per million. The predominant constituent of these brines is sodium chloride; substantial quantities of magnesium chloride are also found. The chemistry of brine solutions is complicated even for the simplest of brine NaCl in water. Since NaCl is a major component of geothermal brines, the brine model used in the program is a NaCl solution. This model, which has good theoretical backing, was developed by Pitzer and Silvester.[7]

The model shows good agreement with measured data. The model is designed for use up to 300°C at concentrations up to 6 molal (259,621 ppm). The model was extended to about 330,000 ppp (8.43 molal). In some cases (the lower concentration cases) it can be used up to 360°C. The model calculates P,V,H and S as a function of temperature and concentration on the saturated liquid line. Increased concentrations of NaCl result in an increased boiling point temperature at a given pressure. The vapor which is in equilibrium with the brine (when the concentration is greater than zero) is superheated, the properties of which are calculated using the Keenan and Keyes equation of state. Table I shows a short T, P, V, H, S table for brine with concentrations of 0, 100,000, and 200,000 ppm of NaCl. Figure 1 shows a plot of H_{liquid} and H_{vapor} versus temperature at various concentrations. From Table I and Fig. 1 one can see that the enthalpy (and internal energy) is substantially less for brine than for pure water. Therefore it is important to model saline geothermal resources as brines rather than pure water.

To illustrate the use of concentrated saline brines in program GEOTHM, a simple bi-fluid cycle is used

NOTICE
This report was prepared as an account of work sponsored by the United States Government. Neither the United States nor the United States Energy Research and Development Administration, nor any of their employees, nor any of their contractors, subcontractors, or their employees, makes any warranty, express or implied, or assumes any legal liability or responsibility for the accuracy, completeness or usefulness of any information, apparatus, product or process disclosed, or represents that its use would not infringe privately owned rights.

MASTER

DISTRIBUTION OF THIS DOCUMENT IS UNLIMITED

Table I. A short table of saturated liquid pressure, enthalpy, entropy, and specific volume as a function of temperature and concentration for sodium chloride-water brines.**

Concentration (ppm)	T (^{o}C)	P (bar)*	H (Jg^{-1})	S (Jg^{-1} K^{-1})	V (cm^3 g^{-1})#
0	50	0.123	104.4	0.336	1.012
0	100	1.013	314.2	0.939	1.044
0	150	4.758	527.3	1.474	1.090
0	200	15.54	747.6	1.963	1.156
0	250	39.73	980.5	2.425	1.251
0	300	85.81	1239.1	2.886	1.404
100,000	50	0.115	92.2	0.336	0.944
100,000	100	0.946	280.2	0.877	0.968
100,000	150	4.448	469.8	1.353	1.002
100,000	200	14.53	661.8	1.779	1.047
100,000	250	37.14	862.8	2.177	1.105
100,000	300	80.12	1106.4	2.610	1.183
200,000	50	0.110	85.8	0.335	0.910
200,000	100	0.902	264.9	0.850	0.930
200,000	150	4.249	444.6	1.301	0.958
200,000	200	13.90	625.3	1.702	0.993
200,000	250	35.59	815.4	2.079	1.033
200,000	300	77.01	1065.3	2.522	1.076

* 1 bar = 10^5 N m^{-2} = 0.1 M Pa

** Vapor values are superheated steam. See the pure water steam tables at the P and T of the liquid phase.

\# For SI units (m^3 kg^{-1}), multiply by 10^{-3}

(as an example, See Fig. 2). The brine enters the heat exchanger at 280°C and 90 bar. Air enters an air cooled condenser at 25°C. The secondary working fluid is isobutane. The turbine inlet temperature is 220°C at a pressure of 50 bar. The pump inlet temperature is 36°C at a pressure of 5.2 bar. The pinchpoint temperature difference is 10°C in the brine heat exchanger and 5°C in the air cooled condenser. The efficiencies of the turbine, pump and fan are 80%, 75%, and 50% respectively. Generator and motor efficiencies are assumed to be 98%. The net power from the plant is set at 10 MW.

Two kinds of brine to isobutane heat exchangers are illustrated. The first is a simple tube shell heat exchanger. This kind of heat exchanger is subject to fouling--it is doubtful that the average U factor would ever be over 567 W m^{-2}°K (100 Btu hr^{-1} ft^{-2}°F^{-1}). The second type of heat exchanger is a four stage flashing cascade heat exchanger.[8] In each stage the brine is flashed; the vapor is scrubbed by the returning condensate (the vapor is desuperheated in the process); then the vapor is condensed on tubes which carry the isobutane. The condensate returns to the brine; the brine leaves the stage at the same concentration it entered the stage. The brine temperature is determined by the stage pressure; the condensing temperature at the tube surface is the condensing temperature of pure water at the stage pressure. Whenever the concentration is greater than zero, the condensing temperature on the tube is lower than the brine temperature. This has the effect of increasing the pinchpoint temperature difference without decreasing the tube surface area. The advantage of the cascade heat exchanger over a tube and shell heat exchanger is reduced fouling and a fivefold increase in U factor. This could result in a reduced cost power plant. Figure 3 shows a schematic view of a four stage cascade heat exchanger. Table II which is divided into two parts, shows the temperature and pressure within the cascade heat exchanger stages as a function of brine concentration. Table III compares the performance of a simple bi-fluid cycle using the cascade heat exchanger with the cycle using the ordinary tube and shell heat exchanger.

While the cases shown in Table III are somewhat idealized, they show that the salts in a brine do have a detrimental effect on the performance of a geothermal power cycle even when the effects of fouling are not considered. The net power yields shown in Table III are interesting because the four stage cascade heat exchanger does not fare well thermodynamically as compared to the tube and shell heat exchanger. Increasing the number of stages will

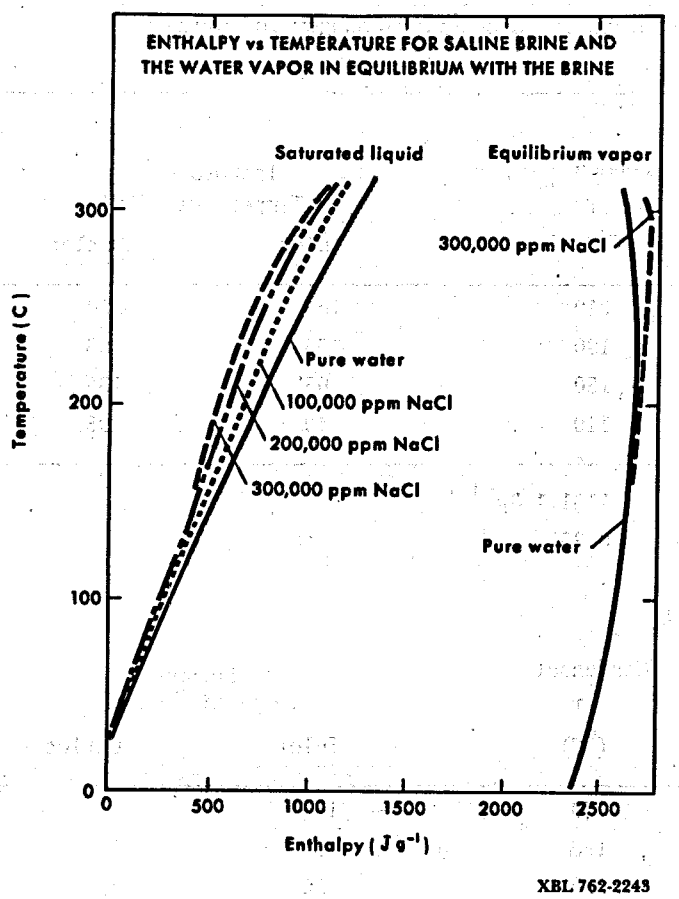

Figure 1. The enthalpy of a saline brine and steam which is in equilibrium with the brine as a function of temperature and concentration.

improve the efficiency considerably. In both cases the 300,000 ppm brines could not be cooled below 158°C without the NaCl coming out of solution.

THERMODYNAMIC CYCLE OPTIMIZATION

A. The Passive Design Mode--A Prelude to Thermodynamic Cycle Optimization. GEOTHM designs a geothermal power plant according to the logical scheme depicted in the simplified flow diagram of Fig. 4. The user specifies the following input data: resource conditions, the net power production or well flow constraint, the configuration of the thermodynamic cycle, and the thermodynamic efficiency factors for the various components in the plant.

GEOTHM also requires a set of thermodynamic cycle or 'state' parameters which provide the minimum information necessary in order to calculate the thermodynamics of the entire plant. The user-selection of the kind and number of the parameters in this set is flexible insofar as the set adheres to the conventions by which the thermodynamic process routines within GEOTHM can compute the thermodynamics of the entire plant. As an example, the simple bi-fluid cycle depicted in Fig. 2 is completely specified by the following six state parameters: (1) the turbine inlet temperature, (2) the turbine inlet pressure, (3) the feed pump inlet temperature, (4) the feed pump inlet pressure, (5) the pinch point temperature difference across the brine heat exchanger, and (6) the pinch point temperature difference across the air-cooled condenser.

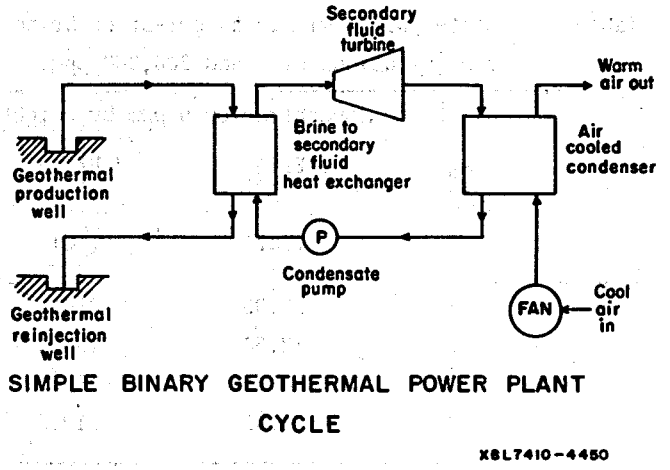

Figure 2. A simple bi-fluid geothermal power plant cycle with an air cooled condenser. The brine to secondary heat exchanger may be either a tube and shell type or a cascade type.

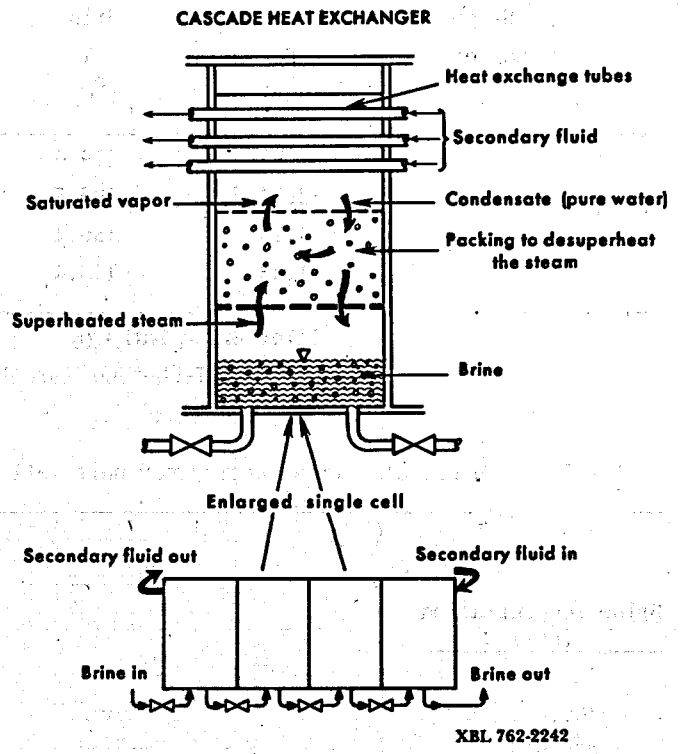

Figure 3. A schematic diagram of a four stage cascade heat exchanger; detail of the stage is shown.

Given the system state parameters and other required input data, the program then designs the plant to satisfy the net power production (or flow) constraint. It also calculates and prints out a set of design performance factors such as cycle efficiency, fluid mass flows, energy yield per unit well flow, heat exchanger areas, plant equipment power consumption, etc. The cost of the plant is a function of these various design factors.

Expressed in the jargon of mathematical programming, GEOTHM essentially maps the user specified input set of system state parameters $\bar{X} = \{X_1, X_2, \cdots X_n\}$ into the output set $f_i\,|\bar{X}| = \{f_1\,|\bar{X}|\,,\ f_2,|\bar{X}|\ \ldots f_m|\bar{X}|\}$ of m design performance factors. Since the final

Table II. State points within a four-stage brine to isobutane cascade heat exchanger for brine concentrations of 0 and 200,000 ppm.

a) Brine concentration 0 ppm by weight

Stage number	Brine P (bar)	Brine T (°C)	Condensate T (°C)	Isobutane Temperature (°C) Inlet	Outlet
1	27.95	230.0	230	163	220
2	12.54	190.0	190	135	163
3	4.76	150.0	150	95	135
4	1.43	110.0	110	40	95

Inlet Brine Enthalpy 1131.1 Jg^{-1}

Brine to Isobutane Flow Ratio 0.832

b) Brine concentration 200,000 ppm by weight

Stage number	Brine P (bar)	Brine T (°C)	Condensate T (°C)	Isobutane Temperature (°C) Inlet	Outlet
1	27.95	239.0	230	166	220
2	12.54	197.5	190	136	166
3	4.76	156.4	150	96	136
4	1.43	115.4	110	40	96

Inlet Brine Enthalpy 919.5 Jg^{-1}

Brine to Isobutane Flow Ratio 1.057

Table III. The net electrical energy per unit well flow as a function of brine concentration.

Brine concentration (ppm)	Net electrical energy yield (W hr/kg) Four stage cascade heat exchanger	Tube and shell heat exchanger
0	26.673	35.145
100,000	23.189	30.968
200,000	20.995	28.398
300,000	15.066*	**

* This is a three stage heat exchanger, the fourth stage would fill up with salt.

** NaCl would come out of solution plugging the heat exchanger.

plant design is completely determined in GEOTHM by the user dictated set of system state parameters X, the program is said to be operating in the 'Passive Design Mode'.

B. GEOTHM: The Dynamic Design Mode. Program GEOTHM has been developed with the desire that it would eventually design a geothermal power plant for minimum cost power. The logical structure of the 'Passive Design Mode' permits the program to serve as an objective function generator which is steered by an optimizer routine which optimizes the thermodynamic cycle with respect to that particular function. Any of the thermodynamic cycle's design performance factors can be singled out as 'objective functions' to be minimized or maximized by the optimizer routine. In contrast to the passive design mode where the user directs the program to design the plant, GEOTHM is defined to be operating in the 'Dynamic Design Mode' when the optimizer routine directs the program to design and optimize the plant.

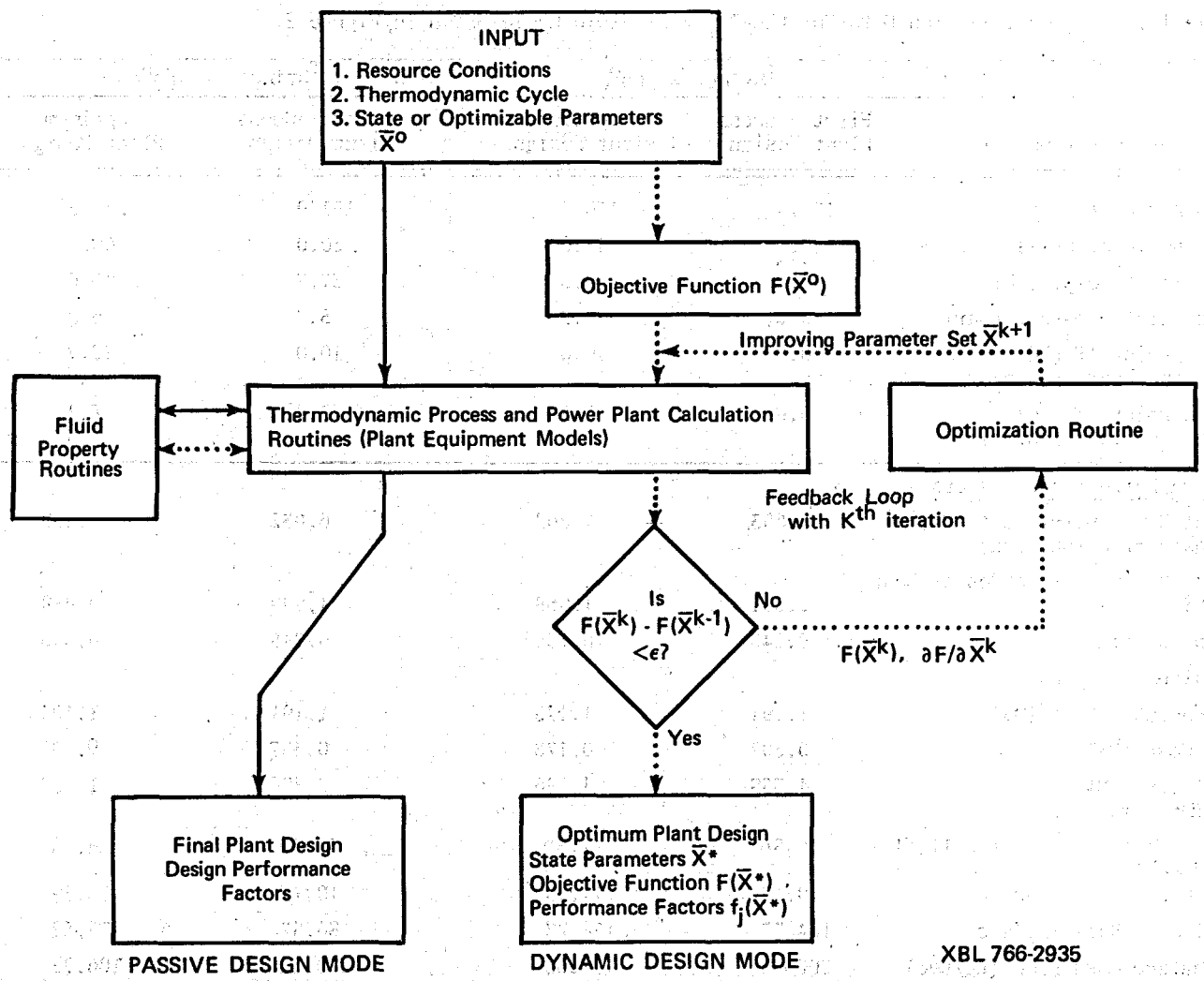

Figure 4. A schematic flow diagram of GEOTHM operating in Passive and Dynamic Design Modes (solid flow lines are Passive Design Mode; dotted flow lines are Dynamic Design Mode.)

The transition from passive to dynamic design mode is achieved by introducing an appropriate minimization routine into the feedback loop illustrated in Fig. 4. The user initiates the optimization process by inputing a 'first-guess' set of system state parameters $\bar{X}^o$(also called optimizable parameters) into the program. He must also specify which of the system's particular design performance factors is the objective function to be minimized or maximized. The minimization routine then directs GEOTHM to compute the value of this objective function $F(\bar{X}^o)$ and the numerical derivatives $\{\partial F(\bar{X}^o)/\partial X_i\}_{i=1,n}$ at the point $\bar{X}^o$. The optimizer than uses this information in order to produce a new set of state parameters which improves the value of the objective function. This procedure is iterated in a convergent sequence until the improvement in the value of the objective function becomes less than some designated tolerance threshold ϵ. For this final set $\bar{X}^*$ of 'optimum' state parameters, the objective function is considered to be minimized (or maximized) and the plant design corresponding to the final set of state parameters is therefore the optimum plant design. The optimization of a thermodynamic cycle by GEOTHM is essentially a one step process which eliminates the tedious multi-cycle calculations required by the standard multi-parameter sensitivity studies.

C. A Preliminary Cost Optimization Study. The Dynamic Design Mode of GEOTHM is demonstrated by a rather simple capital cost optimization of the power plant shown in Fig. 2. The final design of this plant is completely specified by the six optimizable state parameters described previously. Even for this simple plant, the task of performing a six dimensional parameter study is formidable. The data describing the equipment efficiencies and resource conditions are identical to the case described previously, except the brine is assumed to be pure water at both 200°C or 300°C. The program was initialized with various sets of the six optimizable parameters. The results of two such cases are shown in Table IV. For each case, the difference between the optimum capital cost and the initial-guess capital cost is mainly in the costs of the air-cooled condenser, the wells, and the fan. The optimizer has altered the first-guess state parameters to reduce the mass flows of brine and isobutane required for the plant to produce 10 MW of net power. The net cycle efficiency is significantly improved. There is less waste heat to be removed in the cooling stage, thus the condenser heat exchange surface and fan power requirements are greatly reduced. As expected, the cost of the optimum plant declines dramatically for the higher temperature

Table IV. Cost Optimization Data For the 10 MW Bi-Fluid Cycle Shown in Figure 2.

	T_{brine} = 200°C		T_{brine} = 300°C	
State Parameters	First - Guess Plant Design	Optimum Plant Design	First - Guess Plant Design	Optimum Plant Design
Turbine Inlet Temp. (°C)	151.0	170.2	151.0	261.6
Turbine Inlet Pressure (bar)	30.0	44.0	30.0	68.9
Pump Inlet Temp. (°C)	37.7	43.5	37.7	45.6
Pump Inlet pressure (bar)	5.2	5.9	5.2	6.2
Pinch Point ΔT (°C) (brine heat exchanger)	10.0	10.6	10.0	22.8
Pinch Point ΔT (°C) (air-cooled condenser)	5.0	5.8	5.0	8.1
Design Performance Factors				
Plant Raw Capital Cost (M$) (objective function)	8.653	7.862	6.032	4.539
Heat Exchanger + Condenser Cost (M$)	2.551	1.968	1.999	0.989
Pump Cost (M$)	0.245	0.355	0.245	0.346
Turbine Cost plus Generator Cost (M$)	1.191	1.175	1.191	1.104
Fan Cost (M$)	0.307	0.178	0.307	0.102
Well Cost (M$) (1M$ per well)	4.359	4.186	2.290	1.998
Energy Yield per unit well flow (Whr/kg)	16.86	17.56	32.09	36.78
Net Cycle Efficiency (%)	10.17	11.99	10.17	13.39
Well Flow Rate (kg/sec)	164.77	158.22	86.57	75.52
Isobutane Mass Flow (kg/sec)	200.33	178.66	200.33	106.72
Brine Heat Exchanger Area (M^3)	9647	9137	4130	4210
Condenser Area (M^3)	15810	10497	15810	5628
Pump Power (MW)*	1.227	1.776	1.227	1.729
Fan Power (MW)*	1.535	.888	1.535	.512
Turbine Power (MW)*	13.080	12.978	13.080	12.537
Net Power (MW)*	10.000	10.000	10.000	10.000

*The sum of net power plus fan power plus pump power does not equal turbine power because of a 0.98 efficiency factor applied to the motors and the generator.

resource. The greatest cost savings occur for the most expensive components of the plant; the wells and the heat exchangers.

Examination of the computer-generated data of this cost optimization study yields the following conclusions:

(1) The final optimized plant design varies slightly depending on the initial parameter guess. For all of the initial guesses the program converged to nearly the same minimum cost.

(2) The optimum plant design conformed with thermodynamic expectations. For example, the optimum plant design always converged to a super-critical turbine inlet condition;[2] even though the program started with a number of initial sub-critical and super-critical turbine inlet pressures. As expected the pump inlet conditions fell very close to the saturated liquid line.

(3) For a given resource temperature, there exists a linear relationship between the minimum cost of the plant and the cost of the wells (see Fig. 5). The energy yield per unit well flow (resource utilization) of the optimum plant increases with well cost (see Fig. 6).

(4) When we attempted to optimize the plant for maximum efficiency or resource utilization, the heat exchanger areas and costs went to infinity.

All of the preceding observations tend to promote confidence in GEOTHM's thermodynamic model and in the operation of the optimization routine. It is apparent that minimum cost energy is a much more meaningful criterion for cycle optimization than either maximum efficiency or maximum resource utilization.

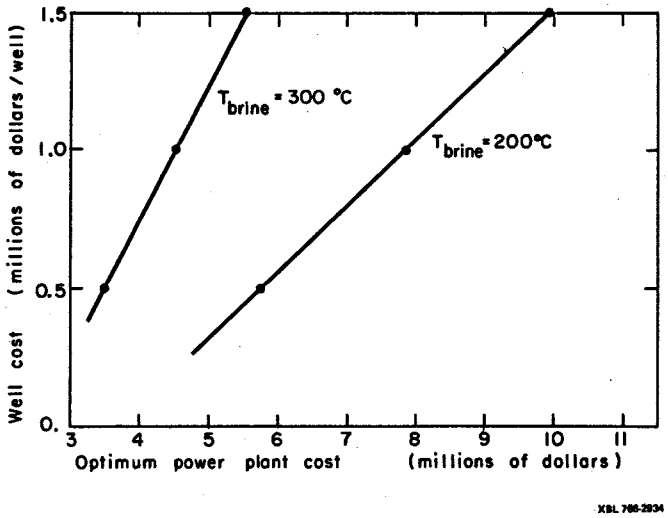

Figure 5. Minimum power plant cost as a function of well cost and brine inlet temperature.

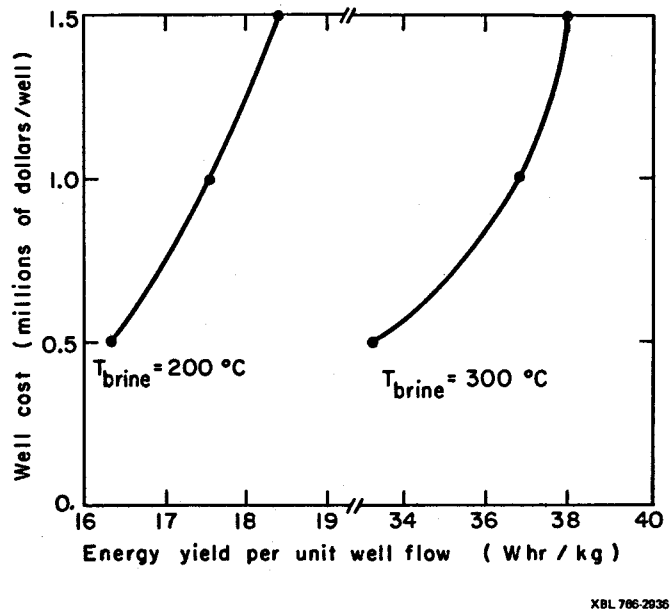

Figure 6. Energy yield per unit well flow as a function of well cost and brine inlet temperature.

SUMMARY

The development of GEOTHM has continued. The program can be used to optimize a wide range of thermodynamic cycles. It is important to note that the optimization is essentially a one step process. The simple bi-fluid cycle has been used as an example but it is clear that a wide variety of cycles can be optimized for minimum cost, maximum efficiency, and many other ways.

ACKNOWLEDGMENT

We thank Leonard F. Silvester and Kenneth S. Pitzer for their brine model. We also thank Ken Mirk for his advice and support.

This report was done with support from the United States Energy Research and Development Administration. Any conclusions or opinions expressed in this report represent solely those of the author(s) and not necessarily those of The Regents of the University of California, the Lawrence Berkeley Laboratory or the United States Energy Research and Development Administration.

REFERENCES

1. M. A. Green, H. S. Pines, "Program GEOTHM, A Thermodynamic Process Program for Geothermal Power Plant Cycles." Presented at the CUBE Symposium at the Lawrence Livermore Laboratory, Oct. 23-25, 1974, LBL-3060, October 1974.

2. M. A. Green, H. S. Pines, "Calculation of Geothermal Power Plant Cycles Using GEOTHM." Presented at the Second United Nations Symposium on the Development and Use of Geothermal Resources, San Francisco, May 19-29, 1975, LBL-3238, May 1975.

3. S. L. Milora, "Application of the Martin Equation of State to the Thermodynamic Properties of Ammonia," ORNL-TM-4413 (December 1973).

4. R. C. Downing, "Refrigerant Equations," DuPont Company, Freon Products Division, Report No. 2313.

5. K. E. Starling, "Fluid Thermodynamic Properties for Light Petroleum Systems" Gulf Publishing Company, Houston, 1973).

6. J. H. Keenan and F. G. Keyes, Thermodynamic Properties of Steam, Wiley & Sons, New York, 1969 ed.

7. L. F. Silvester and K. S. Pitzer, "Thermodynamics of Geothermal Brines, I. Thermodynamic Properties of Vapor Saturated NaCl (aq) Solutions from 0 to 300°C," LBL-4456, January 1976.

8. Private communication, Bechtel Corporation.

LEGAL NOTICE

This report was prepared as an account of work sponsored by the United States Government. Neither the United States nor the United States Energy Research and Development Administration, nor any of their employees, nor any of their contractors, subcontractors, or their employees, makes any warranty, express or implied, or assumes any legal liability or responsibility for the accuracy, completeness or usefulness of any information, apparatus, product or process disclosed, or represents that its use would not infringe privately owned rights.