CONF-760413--3

BNL-21554

THE INFORMATION CENTER AS A LINK BETWEEN BASIC AND APPLIED RESEARCH

S. Pearlstein

The Fifth International CODATA Conference
Boulder, Colorado

June 28 - July 1, 1976

NOTICE
This report was prepared as an account of work sponsored by the United States Government. Neither the United States nor the United States Energy Research and Development Administration, nor any of their employees, nor any of their contractors, subcontractors, or their employees, makes any warranty, express or implied, or assumes any legal liability or responsibility for the accuracy, completeness or usefulness of any information, apparatus, product or process disclosed, or represents that its use would not infringe privately owned rights.

BROOKHAVEN NATIONAL LABORATORY
ASSOCIATED UNIVERSITIES, INC.
under contract No. E(30-1)-16 with the
UNITED STATES ENERGY RESEARCH AND DEVELOPMENT ADMINISTRATION

MASTER

DISTRIBUTION OF THIS DOCUMENT IS UNLIMITED

THE INFORMATION CENTER AS A LINK BETWEEN BASIC AND APPLIED RESEARCH

S. Pearlstein

National Neutron Cross Section Center
Brookhaven National Laboratory
Upton, New York 11973

ABSTRACT

The National Neutron Cross Section Center (NNCSC) concerns itself with neutron physics information of a basic and applied nature. Computerized files of bibliography to the neutron physics literature, and of experimental and evaluated neutron data are maintained. The NNCSC coordinates a national effort, the Cross Section Evaluation Working Group (CSEWG) with participants from government, private, and academic institutions, to establish a computerized reference data base Evaluated Nuclear Data File (ENDF/B) for national programs. The ENDF/B is useful to basic research because it contains recommended values based on the best available measurements and is often used as reference data for normalization and analysis of experiments. For applied use the reference data are extended through nuclear model calculations or nuclear systematics to include all data of interest with standardized processing codes facilitating the use of ENDF/B in certain types of computations. Initially the main application of ENDF/B was power reactor and shield design and only neutron data were evaluated but due to the fact that for many applications both neutron and non-neutron data are required, ENDF/B has been extended in scope to include radioactive decay data and radiation spectra for the burnup and after decay heat of fission products and photon interaction data for gamma ray transport calculations. Cooperation with other centers takes place both nationally and internationally.

INTRODUCTION

A discussion of the information center as a link between basic and applied research can begin in a generic sense since there are common elements that apply to many fields. Scientific investigators can work more efficiently if there are specialized bibliographic searches, data compilations, and evaluated data sets relevant to their research. The following definitions apply:

Bibliography: An index to formal and informal publications containing information on a selected subject.

Compilation: Systematic collection and transcription of information on a selected subject with collation and re-organization for optimal presentation to users.

Evaluation: Critical appraisal of all available information compiled on a selected subject and derivation of consistent best or preferred values with their uncertainties.

REFERENCE DATA

Starting with data compilation and evaluation and referring to part A of Figure 1 there can be a two-way relationship between basic data and basic research. In the field of nuclear physics, for example, the basic data might consist of descriptors of nuclear properties. The basic research community wishes to understand why nuclei have these properties and what further facts about nuclei might be implied. In the process of basic research new observations are made which increase the store of basic data. Applied research studies require a design data base. Here, the emphasis is on the availability

and accuracy of information. If, as the result of continued use, calculations using the design data base fail to predict engineering performance the data base may be changed to improve its utility as a design tool. This action can cause the design data data base to be application dependent.

In part B of Figure 1 a single reference data base is assembled for use by both the basic and applied research communities. First, pertinent references obtained from the bibliographic file are scanned for data. Second, these data are compiled and catalogued for efficient examination. Lastly, after expert evaluation of the compiled data, reference values are adopted for use in research. Documentation of the foregoing process is available to allow user understanding and "second guessing" of the adopted data choices. Even in the case where a user chooses to substitute his own values the reference data base serves as a useful basis for comparisons. Applied research does not directly influence the values in the single reference data base which is application independent, i.e. not tailored for a particular purpose but rather useful in calculating engineering designs from first principles.

The main characteristics of the reference data base are shown in Figure 2. For basic research the data base contains adopted values for observable quantities. For applied research these values are supplemented by information required for engineering purposes. If the information required is simply the rearrangement of basic quantities this redundant data is not added to the reference data base but instead is derived from reference data in subsequent data processing. However, information is added to the reference data base to extend the information over the complete range required for applications. If experimental data is not sufficient to allow this then theory, interpolation or extrapolation from

observed systematics, or outright clairvoyance, is used to complete the data base. Although these procedures result in a data base that contains, temporarily at least, data of uncertain reliability, it is an accepted fact that periodically the data base will be revised on the basis of new information. This continued upgrading of the reference data base should eventually increase the amount of data that can be considered as good standards. The computerization of the reference data base using logical and extendable formats and the coupling of the data base to engineering analysis codes is extremely important in order to facilitate the use of reference data by a large portion of the scientific community. The widespread interest shown by scientists in using centrally available computerized reference data bases, a practice that has obvious technical and economical advantages over scattered efforts, has in some cases prompted the public and private sector to cooperate in the improvement of reference data.

IMPROVEMENT OF REFERENCE DATA

The improvement of reference data can take place through an iterative process involving producers (measurers), evaluators, and users of data working as a team. The wide-spread and systematic use of reference data by the applied science community can sometimes result in the detection of inaccurate reference data that eluded the evaluator because of data uncertainties inherent in basic measurements. The team approach is also valuable for increasing objectivity when weighing several sets of measurements that seem equally precise but are, nevertheless, discrepant with uncertainty ranges that may not overlap.

The first step (shown in Figure 3) toward the improvement of reference data is to make the best possible choices of reference data when considering basic

measurements, theory, and other information. Certain large experiments relevant to applications are simplified to make sure they are interpretable. The experiments are also carefully performed and well documented so they can be analyzed, qualifying them as benchmark experiments. The adoption of benchmark experiments from several fields of application and the comparison between calculation and experiment comprise Steps 2 and 3. Interactive discussion among the experts leads to the identification of major data discrepancies and recommendations for new work to improve the accuracy of the information available. The revision of adopted values in the reference data as mentioned in Step 7 must be consistent with the observable facts obtained from basic measurements and benchmark experiments.

Steps 2 through 7 are repeated until the reference data base converges and the contents approach the expected accuracy of standards data.

THE ROLE OF THE INFORMATION ANALYSIS CENTER

An example of the role of the Information Analysis Center (IAC) as a link between the basic and applied research communities is that played by the Brookhaven National Laboratory (BNL) data center as shown in Figure 4. Since 1952 BNL has been active in data activities closely related to nuclear energy technology. The initial emphasis on neutron data important to reactor criticality studies has broadened to include other data related to nuclear shielding, radiation damage, and reactor safety studies as well. In 1966 the Cross Section Evaluation Working Group (CSEWG) was formed. It consists of many government, private, and university laboratories with the BNL Center acting as coordinator. The handiwork of CSEWG has been the Evaluated Nuclear Data File (ENDF)[1] which has become an international reference data base for certain types of nuclear data. Four versions of ENDF[2] have been issued

over a 10-year period and a fifth one is in preparation for release in 1978. In addition, as a result of CSEWG activities, seminars on special topics have been organized.[4,5] In 1967, the various nuclear data compilation and evaluation activities were organized into a single unit called the National Neutron Cross Section Center (NNCSC)[3] even though the NNCSC activities extend beyond neutron data. The interaction between the NNCSC and CSEWG to produce ENDF is shown in Figure 5.

NATIONAL AND INTERNATIONAL COORDINATION

The NNCSC coordinates its neutron bibliographic scanning and data compilation activities with similar centers in other parts of the world. Meetings are held annually to resolve problems relating to the international exchange of information.

The success of the NNCSC in coordinating national activities leading to the development of ENDF and in cooperating with the world neutron data centers to exchange information led to a U.S. Energy Research and Development Administration (ERDA) request for the NNCSC to coordinate related data activities as well. In Figure 6 are listed some U.S. low energy nuclear physics activities, the so-called X-Centers. Following a first meeting in 1971[8] this group was reconvened in March 1976. ERDA requested the BNL Center to coordinate the activities of these groups regarding master reference data libraries and to coordinate the interaction of U.S. groups with similar groups outside the U.S.[7,8,9] From April 24 - May 7, 1976, at world X-Center meetings held by the IAEA in Vienna, steps were taken to extend the cooperation begun earlier for neutron and charged particle reaction data to nuclear structure and radioactive decay data.

CONCLUSIONS

The BNL Center has been the focus for national and international cooperation in the establishment of reference nuclear data. This cooperation has included not only data compilation and evaluation centers but the strong interaction of measurers of basic data, data evaluators, and applied research scientists. The BNL Center actions to promote the use of a single reference data base over the use of different data bases tailored for basic research or specialized applications has been a significant aid to the establishment of a strong link between the basic and applied research communities.

REFERENCES

1. S. Pearlstein, Advances in Nuclear Science and Technology, Volume 8 (1975) 115-139, Academic Press
2. D. Garber, ENDF/B Summary Documentation, BNL 17541 (ENDF-201) Second Edition, October 1975
3. S. Pearlstein, The NNCSC: Its History and Functions, Nuclear News (1970) 73-76
4. Physics Today, 1972
5. M. R. Bhat, Multi-level Effects in Reactor Calculations and the Probability Table Method, BNL 50387 (ENDF-187) April 1973
6. S. Pearlstein, Seminar on U-238 Resonance Capture, BNL 50451 (ENDF-217) March 1975
7. G. Thompson, Report on the Eleventh Four-Center Meeting, INDC(NDS)-68 August 1975
8. H. Lemmel, Consultants' Meeting on Charged Particle Nuclear Data Compilation, INDC(NDS)-69, December 1975
9. A. Lorenz, Specialists' Meeting on Nuclear Data for Applications, INDC(NDS)-60, September 1974

A

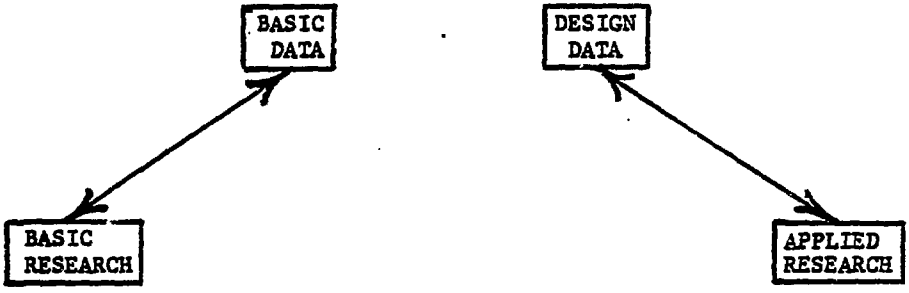

B

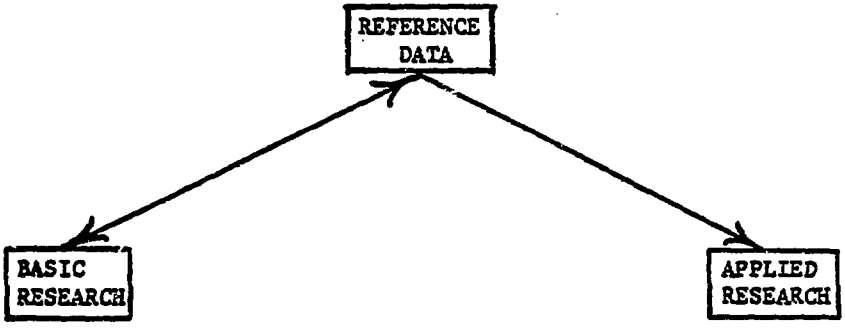

Fig. 1 Examples of the relationship of basic and applied research to data sources.

- BASIC RESEARCH

  ADOPTED VALUES FOR OBSERVABLE QUANTITIES

- APPLIED RESEARCH

  ADOPTED VALUES FOR DESIGN DATA

  COMPLETE DATA BASE

  COUPLING TO ENGINEERING ANALYSIS SYSTEMS

Fig. 2 Reference data requirements

1. ADOPTION OF REFERENCE DATA WITH ASSIGNED UNCERTAINTIES
2. ADOPTION OF BENCHMARK EXPERIMENTS (ENGINEERING MOCKUPS)
3. COMPARISON OF BENCHMARK EXPERIMENTS AND CALCULATIONS
4. INTERACTIVE DISCUSSION AMONG MEASURERS, EVALUATORS, USERS
5. IDENTIFICATION OF MAJOR DATA DISCREPANCIES
6. NEW MEASUREMENTS AND UNCERTAINTY ASSIGNMENTS
7. REVISION OF ADOPTED VALUES
8. REPEAT OF STEPS 2-7 UNTIL CONVERGENCE

Fig. 3 Improvement of reference data

1952	CLASSIFIED NEUTRON DATA COMPILATION
1955	UNCLASSIFIED NEUTRON DATA COMPILATION, BNL-325
1961	COMPILATION ACTIVITIES FORMALIZED, SIGMA CENTER
1961	EVALUATION ACTIVITIES STARTED
1962	COMPUTERIZED STORAGE AND RETRIEVAL SYSTEM, SCISRS
1964	EVALUATION ACTIVITIES FORMALIZED, CROSS SECTION EVALUATION CENTER
1965	EVALUATED NUCLEAR DATA FILE, ENDF
1966	CROSS SECTION EVALUATION WORKING GROUP, CSEWG
1967	SIGMA AND CROSS SECTION EVALUATION CENTERS MERGED, NNCSC
1968	ENDF/B-I, NEUTRON DATA ONLY
1969	FOUR-CENTER EXCHANGE FORMAT, EXFOR
1970	COMPUTER PRODUCED COMPILATION, BNL 400
1970	ENDF/B-II, PHOTON INTERACTION DATA ADDED
1972	ENDF/B-III, PHOTON PRODUCTION DATA ADDED
1975	ENDF/B-IV, RADIOACTIVE DECAY DATA ADDED
1976	BNL COORDINATION OF RELATED CENTERS IN U.S.

Fig. 4 Case history of the BNL Center

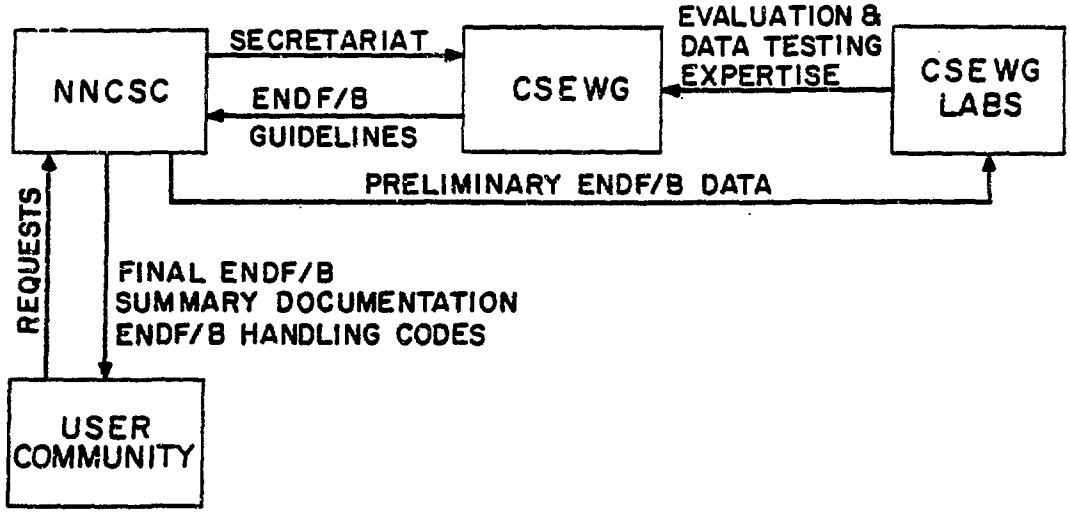

Fig. 5 Relationship between NNCSC-CSEWG and the user community

1. CHART OF NUCLIDES (GE)

2. ENERGY LEVELS OF LIGHT NUCLEI (UP)

3. GAMMA-RAY SPECTRUM GROUP (INEL)

4. NATIONAL NEUTRON CROSS SECTION CENTER (BNL)

5. NUCLEAR DATA PROJECT (ORNL)

6. PHOTO NUCLEAR DATA CENTER (NBS)

7. TABLE OF ISOTOPES (LBL)

Fig. 6 U.S. X-Centers