BNL-41646

IN SEARCH OF $K^+ \to \pi^+\mu^+e^-$ AND OTHER RARITIES SELDOM OR NEVER BEFORE SEEN *

CONF-8805142--31

D.M. Lazarus, H.A. Gordon and P. Rehak
Brookhaven National Laboratory

P.S. Cooper
Fermi National Accelerator Laboratory

J. Egger, W.D. Herold and H. Kaspar
Paul Scherrer Institute (SIN)

V. Chaloupka, E.A. Jagel, H.J. Lubatti and T. Zhou
University of Washington

C. Alliegro, C. Campagnari, N.J. Hadley
A.M. Lee and M.E. Zeller
Yale University

BNL--41646

DE88 016768

ABSTRACT

The progress of AGS Experiment 777, a search for $K^+ \to \pi^+\mu^+e^-$ is described. Results on the decay $K^+ \to \pi^+A^0$, where A^0 is a weakly interacting neutral particle that decays into e^+e^- and preliminary results on the direct decay $K^+ \to \pi^+e^+e^-$ are presented as well as new limits on $\pi^0 \to \mu^+e^-$.

In recent years considerable interest in rare decays has developed in order to probe the validity of the Standard Model. Decays such as $K_L^0 \to \mu e$ and $K^+ \to \pi^+\mu^+e^-$ violate conservation of lepton family number (LFN) and are strictly forbidden in the Standard Model and hence any observation of these decays would unambiguously imply the discovery of new physics. Although very stringent limits on LFN have been obtained for other rare decays such as $\mu \to eee$, $\mu^+A \to e^+A$ and $\mu \to e\gamma$, these decays also violate generation number[1] conservation which may lead to an additional suppression. Searches for $K_L^0 \to \mu e$ and $K^+ \to \pi^+\mu^+e^-$ are complementary since the former can only occur if the form of the interaction is tensor or axial vector whereas the latter can proceed if the interaction transforms as a scaler or vector.

Advantages of searching for $K^+ \to \pi^+\mu^+e^-$ include the momentum definition of the kaons and the possibility of tracking in a charged particle beam, the three charged particles in the final state yield good vertex reconstruction, better constraint to the decay hypothesis, better rejection of accidentals and finally low background resulting from good particle identification and the requirement of an electron in the final state. The most prolific source of K+ decay electrons is

MASTER

$$K^+ \to \pi^+\pi^0 \qquad \text{(Branching Ratio=0.2117)}$$
$$\hookrightarrow e^+e^-\gamma \qquad \text{(Branching Ratio=1.198 x } 10^{-2}\text{)}$$

* Work supported in part by the U.S. Dept. of Energy under Contract No. DE-AC02-76CH00016 and by the National Science Foundation Grant No. PHY-861 3003.

Submitted to 3rd International Conf. on the Intersections Between Particle and Nuclear Physics, Rockport, ME May 14-19, 1988

DISTRIBUTION OF THIS DOCUMENT IS UNLIMITED

Received by OSTI

SEP 1 3 1988

whereas the most troublesome is

$$K^+ \to \pi^+\pi^+\pi^- \qquad \text{(Branching ratio} = 5.6 \times 10^{-2})$$

$$\hookrightarrow e^-\nu \qquad \text{(Branching ratio} = 1.2 \times 10^{-4})$$

$$\hookrightarrow \mu^+\nu \qquad \text{(Branching ratio} = .635)$$

where the π^- beta decays as indicated or is misidentified as an e-.

The experimental apparatus is shown in Figure 1. The 5.8 GeV/c secondary beam is produced by the interaction of $.5 \times 10^{12}$ protons per pulse in a one interaction length platinum target. The unseparated beam consists of three dipole magnets providing momentum dispersion and definition followed by a quadrupole doublet which focusses the beam on the first proportional wire chamber, P1 in order to minimize the beam size in the acceptance region of the detectors. Collimators in the magnets limit the acceptance to .4 msr-GeV/c and were designed to minimize beam scraping and secondary sources. There are some 2×10^8 π^+ and protons in the beam passing through the apparatus per pulse which requires a dead region in the center of the experiment. Ten percent of the 10^7 K^+ per pulse in the beam decay in a five meter-long vacuum box which extends through the aperture of the large dipole magnet M1 whose function is to separate decay products from the beam with positive particles deflected to the right and negatives to the left permitting specialization of particle identification on the two sides of the experiment. The first MWPC, P1 is at the end of the decay vacuum and with P2 upstream of the spectrometer magnet M2 and with P3 and P4 downstream, momentum analysis of the decay products is achieved. Two atmospheric Cerenkov counters are located between the MWPCs on either side of M2 to give redundent electron identification. The Cerenkov counters are segmented by thin membranes separating hydrogen gas on the left from carbon dioxide on the right. For electron detection, an average of 2.2 photoelectrons were detected in hydrogen and 6.6 in carbon dioxide. The threshold for muons in hydrogen is 6.3 GeV/c.

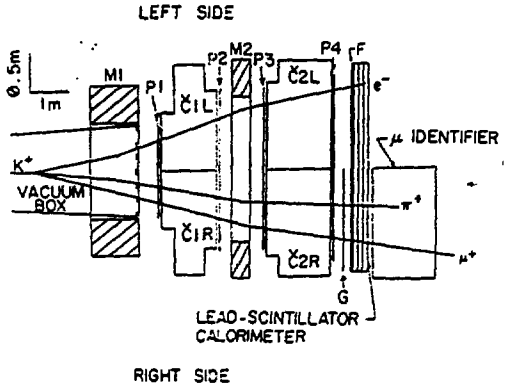

Fig. 1. Plan view of the apparatus. M1 and M2 are spectrometer magnets, P1-P4 are proportional wire chambers, C1L-C2R are Cerenkov counters. F and G are scintillation counter hodoscopes used in triggering.

A lead-scintillator shower counter containing 11.4 radiation lengths of material provides further redundancy for electron identification. The shower counter is segmented into twenty-four

DISCLAIMER

This report was prepared as an account of work sponsored by an agency of the United States Government. Neither the United States Government nor any agency thereof, nor any of their employees, makes any warranty, express or implied, or assumes any legal liability or responsibility for the accuracy, completeness, or usefulness of any information, apparatus, product, or process disclosed, or represents that its use would not infringe privately owned rights. Reference herein to any specific commercial product, process, or service by trade name, trademark, manufacturer, or otherwise does not necessarily constitute or imply its endorsement, recommendation, or favoring by the United States Government or any agency thereof. The views and opinions of authors expressed herein do not necessarily state or reflect those of the United States Government or any agency thereof.

horizontal sections and vertically in two to allow association of individual hits with tracks as determined by the proportional wire chamber spectrometer. It was further segmented into three longitudinal sections to provide information on shower development. A muon identifier was located on the right side at the rear of the system and consisted of eight packages of proportional tubes sandwiched between 9 cm thick steel plates. Each package consisted of one horizontally and one vertically oriented plane of tubes with an effective wire spacing of 6.5 mm. Muons of 0.6 GeV/c, the minimum possible for $K^+ \to \pi^+\mu^+e^-$ at this momentum, would penetrate the first four layers while the entire array would be traversed by a 1.1 GeV/c muon. Finally, two scintillation counter hodoscopes F and G were used for triggering. The F hodoscope has the same segmentation as the shower counter.

In order to deal with the backgrounds noted above, excellent particle identification is essential. The performance of the particle identification system allowed a background limited sensitivity below 10^{-11} in branching ratio. Table I gives the measured efficiencies and rejections for the two sides of the appararatus.

Table I Measured Particle Identification Probabilities

		Identified as e^-	Identified as μ^-	Identified as π^-
Particle on Left	e^-	0.80	$< 2 \times 10^{-2}$	2×10^{-4}
	μ^-	$< 2 \times 10^{-7}$		
	π^-	6×10^{-7}		

		Identified as e^+	Identified as μ^+	Identified as π^+
Particle on Right	e^+	0.94	$< 8 \times 10^{-7}$	8×10^{-5}
	μ^+	3×10^{-3}	.95	.05
	π^+	$(0.05\text{-}5.0) \times 10^{-3}$	0.04	.94

Data was taken with three simultaneous triggers:

1. τ decays. Three charged particles ($K^+ \to \pi^+\pi^+\pi^-$), one on the left and two on the right. These were prescaled by 8192.

2. $K^+ \to \pi^+e^+e^-$. Cerenkov counters all fire with two charged particles on the right. These were prescaled by 8. A subset of these for high mass e^+e^- pairs requires one particle above and one below the vertical midplane of the apparatus taking advantage of the large opening angle for high mass pairs.

3. $K^+ \to \pi^+\mu^+e^-$. Both Čerenkov counters on the left fire with one particle on the left and two on the right, one of which penetrates four layers of the muon identifier.

Data analysis involved track reconstruction and association of tracks with a common vertex with one and only one track on the left side of the apparatus and at least two on the right. A parameter S, the square root of the sum of the squares of the distance of closest approach of each track to the calculated best vertex was computed for each event. The momentum and direction of the parent particle were calculated and loose cuts applied corresponding to the momentum spread in the beam and the location of the production target. These cuts allowed a significant number of events with missing neutral energy such as Dalitz decays to pass.

Light in Cerenkov counter sections, shower counter elements and range in the muon identifier were required to give unambiguous particle identification for each event. The effect of cuts on various distributions were compared with their effect on τ and Dalitz decays as well as with Monte Carlo simulations in order to understand efficiencies and possible biases. The mass resolution for taus is 3.7 MeV/c^2 (standard deviation). The distribution in S and calculated mass is displayed in Figure 2a. Using this as a template for $K^+ \to \pi^+\mu^+e^-$ decays and allowing for the increased energy released in the latter process and its consequent degradation of the experimental resolution as indicated by the larger signal region, Fig. 2b shows our results for $K^+ \to \pi^+\mu^+e^-$. Events to the left of the signal region mainly arise from τ's where decay pions were misidentified or decayed prior to particle identification. Those at higher mass are due to association of accidental hits with tracks in an event.

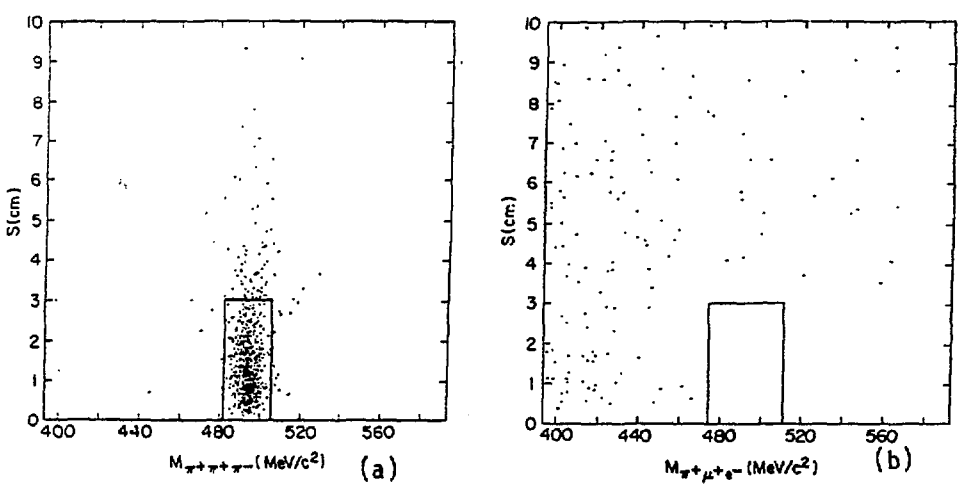

Fig. 2(a) S vs. $M_{\pi^+\pi^+\pi^-}$ scatter plot for $K^+ \to \pi^+\pi^+\pi^-$. The signal region is designated by the rectangle for 483 MeV/c^2 < Mass < 505 MeV/c^2 and S < 3 cm, where S is the square root of the sum of the squares of the distances of the tracks to a common vertex. There are 873 events in the plot. (b) Scatter plot of S vs. Mass for $\pi\mu e$ candidates. There are 133 events in the plot.

A limit on the branching ratio is then obtained by normalizing to Dalitz decays which were chosen because they had the same Cerenkov counter requirements on the left side in the trigger. The upper limit for the branching ratio is given by:

$$BR(K^+ \to \pi^+\mu^+e^-) = BR(\text{Dalitz}) \times \frac{N(\pi^+\mu^+e^-)}{N(\text{Dalitz})} \times \frac{G(\text{Dalitz})}{G(\pi^+\mu^+e^-)} \; XC$$

where $BR(\text{Dalitz}) = BR(K^+ \to \pi^+\pi^0) \times BR(\pi^0 \to e^+e^-\gamma) = 2.54 \times 10^{-3}$, $N(\pi^+\mu^+e^-) = 2.3$, the 90% confidence limit on the number of $\pi^+\mu^+e^-$ events obtained, N(Dalitz) is the number of observed Dalitz decays multiplied by the prescaling factor, G(Dalitz) and $G(\pi^+\mu^+e^-)$ are the geometric acceptances for the respective decays, C is the product of correction factors accounting for differences in the effects of cuts, contamination from other decay modes, and particle identification and trigger efficiencies. The result is:

$$BR(K^+ \to \pi^+\mu^+e^-) < 1.1 \times 10^{-9} \text{ (90\% C.L.)} \quad ,$$

an improvement of a factor of 4.4 on the previous limit.[2] This implies a lower limit of 27 TeV on the mass of a gauge boson propagator for a new interaction by which this decay would proceed assuming standard model couplings.[1]

The limit on $K^+ \to \pi^+\mu^+e^-$ implies a limit on $\pi^0 \to \mu^+e^-$ since the decay of the K^+ into $\pi^+\pi^0$ accounts for 21 percent of all K^+ decays. The limit obtained is:

$$BR(\pi^0 \to \mu^+e^-) < 7.8 \times 10^{-8} \text{ (90\% C.L.)}$$

which is comparable to the previously determined value which was inferred by authors not involved in the measurements.[3 4] This data was obtained in FY1987. More than 8 times as much data has been accumulated in the present run which just ended.

The observation of low mass correlated e^+e^- peaks produced in heavy ion collisions by the EPOS experiment[5] at GSI, Darmstadt, and the spate of theoretical papers on short lived axions and light Higgs bosons that followed stimulated us to search for 1.8 MeV/c^2 e^+e^- pairs emitted in $K^+ \to \pi^+e^+e^-$. The results of this search are summarized in Fig. 3 where the data is compared to a Monte Carlo distribution for a neutral particle A^0, produced in $K^+ \to \pi^+A^0$ with a mass of 1.8 MeV/c^2 that subsequently decays into e^+e^- with a branching ratio of 10^{-6}. Resolution smearing, brehmsstrahlung and multiple Coulomb scattering were included in the Monte Carlo calculation. The branching ratio upper limit obtained is plotted vs lifetime for A^0 masses of 1.8 Mev/c^2 and 100 MeV/c^2 in Fig. 3(b). Normalization to Dalitz decays which have the same observed final state particles was again employed with appropriate acceptance corrections as determined by Monte Carlo simulation. Limits obtained by Asano et al.[6 7 8] are also plotted. This experiment set more stringent limits for lifetimes shorter than 10^{-12} second. For longer lifetimes the probability of the decay occurring before the detector is traversed is reduced whereas in the KEK experiment the decay occurred at rest

enhancing their sensitivity to longer lifetimes. This work is complete and has been published in the Physical Review Letters.[9]

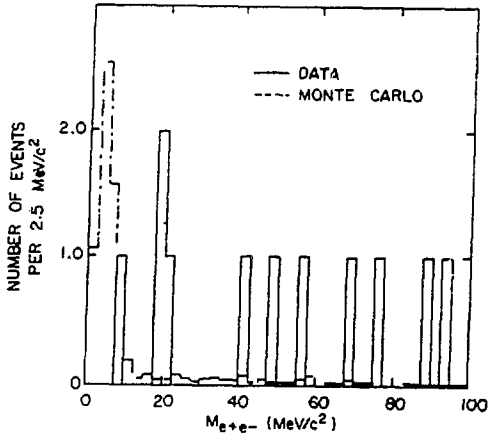

Fig. 3(a) Distribution of M_{ee} for 492.5 MeV/c^2 $\leq M_{ee} \leq$ 520 MeV/c^2. The dashed line indicates the signal expected from the decay of a 1.8 MeV/c^2 A^0 with BR(A^0) equal to 10^{-6}. The high mass tail on this Monte Carlo distribution is the result of electron bremsstrahlung and multiple Coulomb scattering.

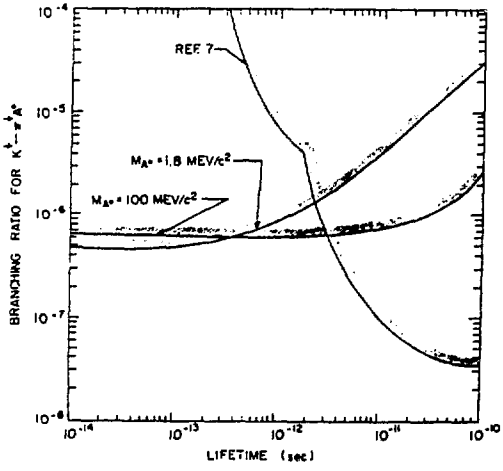

(b) BR(A^0) for A^0 mass equal to 1.8 MeV/c^2 and 100 MeV/c^2 (this experiment), and for A^0 mass equal to 1.8 MeV/c^2 from Ref. (6) for data from Refs. (7) and (8). Areas above the respective lines are excluded with greater than 90% confidence level.

The direct decay $K^+ \to \pi^+e^+e^-$ has been previously detected at CERN[10] where 41 events were obtained yielding a branching ratio of $(2.6 \pm 0.5) \times 10^{-7}$ assuming a uniform phase space distribution. A scatter plot of our data is given in Fig. 4 where the high mass e^+e^- events can be seen above the Dalitz decays which reconstruct to a lower kaon mass because of the unobserved energy carried away by the gamma. In Fig. 5 the e^+e^- invariant mass distribution is plotted with Monte Carlo distributions generated from scalar (a) and vector (b) matrix elements. The vector interaction provides a better fit to the data which consists of 160 events obtained in the FY1987 run. In the FY1988 data more than 800 events are anticipated which will allow for a detailed analysis of the Dalitz plot.

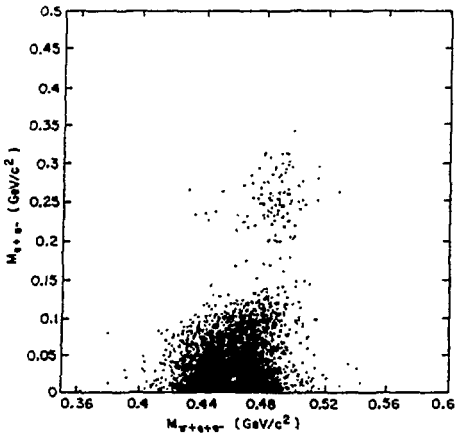

Fig. 4 Scatter plot of M_{ee} vs. $M_{\pi ee}$ for $K^+ \to \pi^+e^+e^-$ decays with the requirement that the reconstructed K^+ momentum vector originate at the production target.

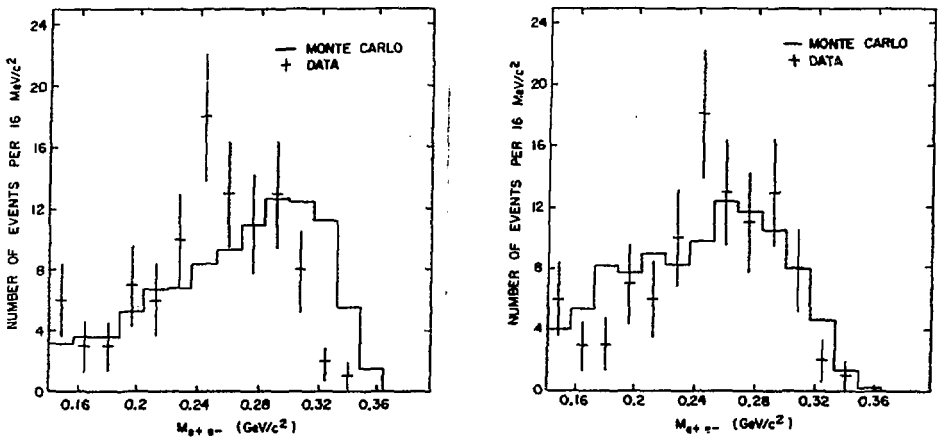

Fig. 5(a) Distribution of e^+e^- invariant mass for $K^+ \to \pi^+e^+e^-$ with $.475$ GeV/c^2 $< M_{\pi ee} <$ $.520$ MeV/c^2. A phase space Monte Carlo generated mass distribution is indicated by the histogram. (b) The histogram was generated by a Monte Carlo calculation based on a vector interaction.

SUMMARY AND FUTURE PLANS

In FY87 we achieved a new limit for $K^+ \to \pi^+\mu^+e^-$ of 1.1×10^{-9} (90% C.L.) and more than eight times as much data was obtained in FY1988 implying a sensitivity approaching 10^{-10}, a factor of fifty improvement on previously published results. A limit was also set on $\pi^0 \to \mu^+e^-$ of 7.8×10^{-8} in FY 87 and the FY1988 data should provide a sensitivity below 10^{-8}. The experiment should be sensitive to $\pi^0 \to e^+e^-$ which has been observed in two previous experiments,[11 12]

which have reported branching ratios of $(22.3\ ^{+24}_{-11})\times10^{-8}$ and $(17\pm9\pm3)\times10^{-8}$ based on about 6 and 59±21 events respectively. Model dependent calculations limit this branching ratio to twice the unitarity lower bound of 4.75×10^{-8}.

We anticipate about 80 events in our present data sample of which approximately 30 were recorded with a high rate beam chamber operating. This chamber was installed late in the FY1988 run and has operated successfully with beam intensities in excess of 10^8 particles per second. The 0.7 mm resolution of this device should allow additional kinematic constraint to suppress the Dalitz decay background as well as improve the mass resolution and accidental suppression for all decays. In FY 1989, several hundred $\pi^0 \to e^+e^-$ events could be easily obtained.

We have set branching ratio limits of 4.5×10^{-7} on the decay $K^+ \to \pi^+A^0$, for A^0 lifetimes shorter than 10^{-13} second where A^0 is a weakly interacting neutral particle that decays into e^+e^- as discussed in several axion variant models proposed to explain the e^+e^- peaks observed in heavy ion collisions at GSI.

Data from the FY 1987 run yielded 160 fully analyzed $K^+ \to \pi^+e^+e^-$ events whose e^+e^- mass spectrum favors a vector interaction. With the FY1988 data in hand, it should be possible to carry out a Dalitz plot analysis with more than 800 events.

In the next two years we anticipate additional running on K^+ $\pi^+e^+e^-$ and $\pi^0 \to e^+e^-$, as well as new limits on $K^+ \to \pi^+\mu^+e^-$ which should be close to an order magnitude improvement on our present results. Additional physics to be explored includes searches for boson decays resulting in peaks in the e^+e^- mass spectrum of $\pi^+e^+e^-$ decays and more sensitive searches for other forbidden decays.

REFERENCES

1. R.N. Cahn and H. Harari, Nuc. Phys. B176, 135 (1980).
2. A.M. Diamant-Berger et al., Phys. Lett. 62B, 485 (1976).
3. D. Bryman, Phys. Rev. D26, 2538 (1982).
4. P. Herczeg and C.M. Hoffman, Phys. Rev. D29, 1954 (1984).
5. T. Cowan et al., Phys, Rev. Lett. 56, 444 (1986).
6. L.M. Krause and M.E. Zeller, Phys. Rev. D34, 3385 (1986).
7. Y. Asano et al., Phys. Lett. 107B, 159 (1981).
8. Y. Asano et al., Phys. Lett. 113B, 195 (1982).
9. N.J. Baker et al., Phys. Rev. Lett. 59, 2832 (1987).
10. P. Bloch et al., Phys. Lett. 56B, 201 (1975).
11. J. Fischer et al., Phys. Lett. 73B, 364 (1978).
12. J.S.Frank et al., Phys. Rev. D28, 423 (1983).