BNL-24349

CONF-780235--4

March 1978

A Proportional Wire Chamber System for Beam Definition in Precision Total Cross Section Measurements

A.S. Carroll, I-H. Chiang, T.F. Kycia, K.K. Li, P.O. Mazur, D.N. Michael
P.M. Mockett, D.C. Rahm, R. Rubinstein, D.P. Eartly and A.A. Wehmann.

NOTICE
This report was prepared as an account of work sponsored by the United States Government. Neither the United States nor the United States Department of Energy, nor any of their employees, nor any of their contractors, subcontractors, or their employees, makes any warranty, express or implied, or assumes any legal liability or responsibility for the accuracy, completeness or usefulness of any information, apparatus, product or process disclosed, or represents that its use would not infringe privately owned rights.

MASTER

The submitted manuscript has been authored under contract EY-76-C-02-0016 with the U.S. Department of Energy. Accordingly, the U.S. Government retains a nonexclusive, royalty-free license to publish or reproduce the published form of this contribution, or allow others to do so, for U.S. Government purposes.

DISTRIBUTION OF THIS DOCUMENT IS UNLIMITED

BNL-24349

A Proportional Wire Chamber System for Beam Definition in Precision Total Cross Section Measurements*

A.S. Carroll, I-H. Chiang, T.F. Kycia, K.K. Li, P.O. Mazur†, D.N. Michael, P.M. Mockett‡, D.C. Rahm and R. Rubinstein†

Brookhaven National Laboratory, Upton, New York 11973

and

D.P. Eartly and A.A. Wehmann

Fermi National Accelerator Laboratory, Batavia, Illinois 60510

We have developed and extensively used a PWC system in precision measurements of total cross sections at low momenta (0.4 - 1.1 GeV/c) and at high momenta (23-370 GeV/c). This "electronic collimator" operated simultaneously in a fast (250 nsec) decision making mode, and a slower (0.5 msec) readout mode. The decision making mode utilized adjustable hard-wired logic to define acceptable incident beam trajectories and reject multiple beam tracks. A sample of the events were read into an on-line computer for beam tuning, for chamber diagnostics, and for study of the effect of small angle scattering to verify the total cross section extrapolation procedure.

---

*Work supported by the U.S. Dept. of Energy under Contract No. EY-C-02-0016

†Present address: Fermi National Accelerator Laboratory, Batavia, Illinois 60510

‡Present address: University of Washington, Seattle, Washington 98195

I. Introduction

In the course of designing high precision total cross section experiments for the AGS at Brookhaven National Laboratory (BNL)[1], and for the accelerator at the Fermi National Accelerator Laboratory (FNAL)[2], it was realized that one of the major limitations on the systematic accuracy of these experiments would be the quality of the incident beam. Even with carefully designed beam optics there is inevitably some residual "halo" around the final beam spot due to scattering and particle decay which can lead to inaccuracies in the extrapolation to zero solid angle required by total cross section experiments. In addition there are magnet drifts which cause the final beam spot to move. Also, in high precision total cross sections, a way must be found to determine if there are two incident particles within the scintillation counter logic resolving time. These effects could lead to systematic errors as large as a few percent in experiments which can easily obtain a statistical precision of $\pm$ 0.1%. There probably are other high energy physics experiments which have similar requirements on beam definition.

In this article we describe an electronic system utilizing proportional wire chambers (PWC) which at rates up to 5×10^5 particles/sec was able to select only those single incident beam tracks which aim toward a specified area. In other words, this was an electronic beam collimator which because of its positive selection was capable of much better definition than those made from solid materials. A system with similar aims has been developed by Harms at Berkeley[3].

II. Specifications of System

Layout drawings of the BNL and FNAL total cross section experiments are shown in Fig. 1a and 1b. The proportional chambers PWC 1 and PWC 2 before the liquid hydrogen target were used to define a spot at the transmission counter stack T which was mounted on a movable trolley. In the BNL experiment we defined a horizontal and vertical spot of ± 3.6 cm at distances of 115 to 275 cm from the target center, and in the FNAL experiment a spot of ± 6 mm was required at distances of 7 to 100 meters. Given the spacing between the chambers we used, resolutions were about ± 2.5 mm in the BNL experiment and ± 1.3 mm in the FNAL experiment. Such resolutions are difficult and expensive to achieve with scintillation counters.

With a proportional chamber system one can manage high counting rates at a cost of about $10/wire. Furthermore, the average mass of these chambers (~ .04 gr/cm^2) was such that there is very little scattering from them.

Even though these systems were designed for a high degree of reliability they were of sufficient complexity that provisions for computer diagnostics were required. In order not to increase the cycle time, the computer read out for these diagnostics was done on a sampling basis.

The number and spacing of the wires in the PWC's are listed in Table I.

III. General Description of the System Logic

The basic design philosophy used in our TTL integrated circuit logic was similar to that outlined by Sippach and Sunderland.[4] Fig. 2 shows a block diagram of the system logic for two of the four coordinates in the two PWC's, and system timing is illustrated in Fig. 3.

The leading edges of the PWC pulses were put in coincidence with the beam scintillation counter telescope (B2·B3) at the inputs to the logic flip flops. Therefore all the critical timing was achieved early in the system and from there on all logical deicisions were made in what was essentially a DC mode (> 100 nsec). By separating the timing and logical aspects of the system, the system could be built much more cheaply and flexibly than if the timing had to be maintained throughout.

To deal with the 5 - 10% of events that correspond to 2 adjacent wires firing, we developed "half-wire" logic. From each sense wire in the PWC, we generated two signals which corresponded to either signals from isolated wires or coincidences between two adjacent wires. See Section V for details.

From the half-wire logic the signals split three ways: First: if there were multiple particles in any coordinate this was detected in the greater than one (G.T.O.) circuits which consisted of linear adders and discriminators. Second: the required correlation between the two horizontal and the two vertical coordinates to define the final spot was set by the use of diode pins in the two matrix boards, and a signal was then generated in the matrix coincidence circuits if any correct coincidence between wires was sensed. The output of the matrix coincidence boards with the G.T.O. circuits in veto were strobed after an appropriate settling time to generate the output known as CLEAN BEAM.

Since the read out cycle took up to 0.5 msec a third signal went to long term storage so that a sample of data could be read into the on-line computer while the CLEAN BEAM section continued to cycle at up to a 4 MHz rate. If the readout system was not busy then all the coordinate information

including half wires was clocked into the readout flip flops. The actual decision on whether to read the information through the readout controller into the PDP-15 computer was based on a number of different possible scintillation counter combinations using commercial fast logic and generally including CLEAN BEAM.

IV. Chambers and Amplifiers

The chambers were built with fairly conventional construction techniques as illustrated in Fig. 4. The open area in the G-10 epoxy fiberglass frame was a 20 cm x 20 cm on all the chambers, and active area could be up to 16 cm x 16 cm. The 17 micron diameter sense wires of gold plated tungsten were epoxied and soldered to the printed circuit boards. Outside the active wires, the electric field was tapered by 4 wires which increased from 50 microns to 250 microns and were spaced at 1.27 mm apart. In both experiments the sense wires were wound with 2.54 mm spacing, but since less resolution was required in the BNL experiment the wires were connected in pairs before going to the amplifier. The high voltage screens were spaced 6 mm from the sensing wires and made from stainless steel mesh of 0.076 mm diameter at about two wires/mm. Both the vertical and horizontal sensing wires were enclosed within a common gas volume, but had separate high voltage inputs. Between the two coordinates of a chamber was an intermediate grid at ground potential which was used to isolate the two halves and to apply test pulses to all the sense wires simultaneously by capacitive coupling.

A premixed gas mixture of 80% argon and 20% isobutane bubbled through methylal at $0^{\circ}C$ flowed through the chambers at the rate of a few cm^3/min. Using this mixture, tests with a Sr^{90} source indicated that the chambers could withstand over 10^{11} particles/cm^2 without significant degradation in performance.

For the sense amplifiers we used a design by Sippach[5] which incorporated a variable threshold sensitivity down to ~ 0.3 mv, a limiter and one shot with adjustable threshold. In actual practice a threshold of ~ 2 mv was found to be satisfactory. Because some loss was noted at high rates, a capacitor in the amplifier feed back loop was reduced from 1μf to .001μf. The shaped pulses were sent to the logic system inside the experimental trailer along RG174/U cables of up to 400 feet in length.

At the operating point of 3200 V, the efficiencies of the chamber were 99.7% at rates below 2×10^5/sec/wire. Tests indicated that resolving times as short as 30 nsec with full efficiency were possible, but the normal operating gate width was 60 nsec. With this gate width the percentage of single, double, and triple wire clusters was typically 92%, 7% and 1%. Thus rejection of clusters larger than two caused only a small loss of events.

After an initial shakedown period the chambers were extremely stable and reliable. We experienced less than one amplifier failure/week.

V. Circuit Descriptions

In Fig. 5 we show 2 out of 8 input channels on the "receiver and readout" (R & R) card. Since the shaped pulses from the PWC were at MECL levels and the logic system operated at TTL levels, the first stage was a μ710 comparator operating as a line receiver and level shifter. By controlling the voltage bias on the μ710, the input sensitivity could be adjusted to 0.1 ~ 0.3 V according to the length of the cable and noise conditions. In the FNAL experiment the 7402 gate was added to positively gate the leading edge of the μ710 output into the 7474 edge triggered flip flop to eliminate

problems with two pulses on the same wire. Since the flip flop was leading edge triggered, the resolving time was obtained from the coincidence width of two scintillation counters in the beam and was a minimum of 30 ns wide to allow for the jitter in the PWC pulses.

The timed signals remained in the 7474's until reset by a delayed beam trigger pulse about 150 nsec later. Thus the basic cycle of the system was somewhat less than the 200 nsec dead time of the amplifiers.

To deal with the problem of signals on two adjacent wires (doubles), "half-wire" circuitry was developed for the section beyond the 7474's. In this section each 7474 output was inverted and used to veto the output of its adjacent neighbors in a 7410 threefold NAND gates and put directly into coincidence with both of its adjacent neighbors in a 7400 twofold NAND gate. With this arrangement "singles" came out directly, whereas "doubles" appeared in the "half-wire" outputs. "Triples" appeared on two adjacent "half wires". The adjacent wire veto could be disabled for testing through an external switch (labelled $\bar{A}$). "Singles"and "doubles" were thus coded with the maximum precision possible and "triples" could be rejected by requiring no "greater than one" output from the circuits described below. Assuming that the "doubles" represented a particle passing mid-way between wires this coding means that particle position was always known to be better than $\pm$ 1/2 the wire spacing. A satisfactory circuit for translating from NIM to TTL logic levels was constructed from a suitably biased MC10125 fanned out through 74H40's.

The "greater than one" (G.T.O.) boards shown in Fig. 6 were simple diode linear summing circuits of up to 63 channels which add all the digital outputs from each of the coordinates. There are four such circuits in the

experiment (horizontal and vertical coordinates of both PWC 1 and PWC 2). The discriminator at the summing point was set to provide a positive output whenever there were two or more inputs. The outputs of the four G.T.O. circuits were ORed together to provide the veto signal for the system.

In order to determine the desired beam size at the focus, a correlation between wires in PWC 1 and PWC 2 was established through the use of two matrices. The matrix boards and diode pins were purchased from the CO-ORD Switch Co.[6] Basically, a wire from PWC 2 vertical chamber was put into coincidence with only a few PWC 1 vertical wires. The same was done for the horizontal wires. We could thus require that the particles have the correct trajectories to pass through the focus. The circuitry for the vertical and horizontal matrices are shown in Fig. 7. From the output of the R & R cards for the PWC 1, the pulses travelled via coaxial cables to the emitter follower drivers, through the diode pins and back to a "coincidence" card where the output of the diode matrix lines was put on twofold coincidence with a line from the corresponding PWC 2 R & R card output. The emitter follower drivers were necessary because one input to the matrix board may drive up to 15 output lines through the diodes. The outputs of the matrix lines were terminated in 200 Ω resistors in order to make the fall times of these pulses ressonably short. Outputs from the horizontal and vertical coincidence boards were put into coincidence so that a suitable trajectory was required in both planes.

From the combined output of the coincidence cards and the ORed veto from the G.T.O. cards, a level indicating a good beam particle was derived.

This level was strobed after a delay of 100 nsec to eliminate transient effects due to differences in timing and pulse shapes. This strobed CLEAN BEAM pulse was fed back into the commercial fast logic circuitry at standard NIM levels for performing additional logical decisions.

VI. Readout and Computer Diagnostics

As indicated earlier there was a second set of 7474 storage registers in order that information might be held for a longer period of time for computer read out. The information in the first set of registers was clocked into the second set after a 100nsec delay for every incident beam particle if the data handler was not busy. This set of flip-flops was actually read out only if more complex logic requirements were met. For instance in the BNL experiment the requirement was generally that there was one and only one mass selected particle on a trajectory allowed by the matrix. In the FNAL experiment requirements on the downstream counters and chambers could be added. If the requirements were met a "read" signal was sent out to the data handler to start the readout cycle. If the requirements were not met, then the registers were reset, and the system was available for accepting another event within one μsec (BNL) or 3 μsec (FNAL). This dual system of registers allowed the logic system to make decisions on the incident beam at rates comparable to the scintillation counter logic, while sampling the events for diagnostic purposes at the much slower computer speeds.

For the BNL and FNAL experiments the readout systems take the raw data in 32 or 16 wire groups from the second set of registers and encode it for compact storage in the PDP-15 computer and on magnetic tape.

The FNAL PWC readout system was split into two distinct systems. One functioned as a 2 MHz latch scanning, priority encoding buffer. The other was a multiplexing PDP-15 Interface which read the buffer data words and also read counter bit latches, scalers, and the ADC data words in the experiment.

Upon a READ command the high speed buffer, which contained a ring counter, sequentially addressed all 16 wires in the second set of logic registers. When a group presented wire data, these data were priority encoded (highest wire first) into alternate 9 bit (4 wire bits and 5 address bits) halves of a 18 bit word of the 32 word buffer at a 5 MHz data self-strobe rate. A wire was stored in less than 0.5μs. After all wires of a given group were stored, the ring scanner proceeded. When the scan was finished, the buffer was clocked at 2 MHz to move the encoded data to the end of the buffer, a fixed bit word was generated, and a READY interrupt was sent to the Interface. The Interface then read in the number of 18 bit data words stored in the buffer by countdown against a buffer word counter. This rate was determined by the computer (~ 1.5μs/word). After the computer readout, the buffer reset itself and the dead time gate was released for a new READ command.

A wide variety of diagnostic displays and print outs were included in the on line computer programs. These included profiles at each chamber and extrapolated profiles as illustrated in Fig. 8. Also information on the multiplicity of wires in each chamber including misses was available. A frequency map of the matrix pins was obtained for a given beam setup prior to a data run, so that the diode pins could be arranged for maximum efficiency. The logic of the matrix and G.T.O. circuits were checked by repeating the

hard-wired logic with the computer program of the PDP-15. If errors were detected the wires involved were printed out so that circuit faults could be repaired.

Using the intermediate grid on the PWC, every wire could be pulsed and read into the computer. This meant that faulty amplifier and logic elements could be quickly located.

The PWC data was also written on magnetic tape for off line analysis. This off line analysis in the FNAL experiment allowed measurements to be made for both single and multiple tracks to a considerably smaller value of $|t|$ than that for the scintillation counters and verified validity and accuracy of the extrapolation procedure using the scintillation counter data.

Performance

The BNL system worked reliably up to 5×10^5 particles/chamber/sec with a system dead time of 300 nsec. Above that date the losses due to dead time effects in the amplifier become greater than 1%. Presumably this loss could be reduced with a suitable amplifier design. The propagation time through the matrix logic is about 150 nsec with the TTL integrated circuits used. Given the time jitter in the PWC and the system electronics, the minimum cycle time was about 150 nsec with the TTL integrated circuits used. The reliability of this system was very high. Very few (generally less than one/week) failures occurred during the actual running of the experiment after a short initial shakedown period. Some sense wire breakage in the PWC occurred during the long down periods between experimental runs. This breakage was probably caused by rough edges on the printed circuit boards

to which the wires were fastened. When these edges were well rounded, no further breakages occurred.

The nature of the improvement in the total cross section measurement achieved through the use of the PWC system is indicated by the test results shown in Fig. 9. In this test of a positive 100 GeV/c beam on a carbon target, the beam was deliberately defocussed by turning off quadrupoles. The beam diameter was increased from 0.9 cm to 3.0 cm, and then the partial cross sections were measured with and without the PWC matrix. In order to determine the total cross section, an extrapolation to a four momentum transfer t = o must be made. Clearly with this enlarged beam a large error is made in the extrapolation. In the case of the actual measurements the presence of this PWC system prevented smaller effects in beam alignment and quality from adding to the systematic errors which were typically a few tenths of a percent. Other experiments requiring similar control of the incident beam quality could obviously benefit from a system similar to this one.

Acknowledgments

It is a pleasure to acknowledge the many people who contributed to the construction and testing of this system. Carl Anderson and George Munoz were responsible for the assembly of the electronic logic and Harry Sauter did much of the mechanical work connected with the chambers. Summer students Alan Schiz and Christopher Jones greatly assisted in assembly and testing of various parts of the system. Special thanks go to William Sippach of Nevis Laboratories who supplied the art work for the amplifier cards and a great deal of valuable advice.

In the FNAL system thanks go to Gordon Kerns for his part in the design and assembly of the computer interface. H. Christ was responsible for the

assembly of the readout buffer. We also wish to thank the other authors of reference 2 for their assistance in collecting the data.

References

1. A.S. Carroll, I-H. Chiang, T.F. Kycia, K.K. Li, P.O. Mazur, D.N. Michael, P. Mockett, D.C. Rahm, and R. Rubinstein. Phys. Rev. Lett. 32, 247 (1974); Phys. Rev. C 14, 635 (1976); Phys. Lett. 45B, 531 (1973); Phys. Rev. Lett. 37, 806 (1976).

2. A.S. Carroll, I-H. Chiang, T.F. Kycia, K.K. Li, P.O. Mazur, P. Mockett, D.C. Rahm, R. Rubinstein, W.F. Baker, D.P. Eartly, G. Giacomelli, P.F.M. Koehler, K.P. Pretzl, A.A. Wehmann, R.L. Cool, and O. Fackler. Phys. Rev. Lett. 33, 928 (1974); Phys. Rev. Lett. 33, 932 (1974). Phys. Lett. 61B, 303 (1976) and to be published.

3. M.G.A. Harms. LBL-2053, 1973. (Unpublished).

4. W. Sippach and J. Sunderland. Rev. of Sci. Instr. 39, 161 (1968).

5. H. Cunitz, W. Sippach and J. Dieperink. Nucl. Instr. & Meth. 91, 211 (1971).

6. Co-Ord Switch Div. LVL Industries, Inc. 135-25, 37th Ave. Flushing, New York, 11354.

TABLE I.

Proportional Wire Chamber Specifications

1. BNL System

Wire spacing of 2.54 mm with wires connected in pairs to each amplifier channel.

Upstream Chambers (PWC 1 & PWC 2)

Horizontal Coordinates - 32 channels

Vertical Coordinates - 16 channels

Chamber Spacing - 1 meter

Downstream Chambers

PWC 3

Horizontal and Vertical Coordinates - 32 channels

PWC 4

Horizontal and Vertical Coordinates - 64 channels.

2. FNAL System

Wire Spacing of 2.54 mm with one wire connected to each amplifier channel.

Upstream Chambers (PWC 1 & PWC 2)

Horizontal Coordinates - 24 channels

Vertical Coordinates - 32 channels

Chamber spacing - 30 meters

Downstream Chamber (PWC 3)

Two horizontal, two vertical and two 45° coordinates - each 40 channels.

Figure Captions

1 a. Layout of Brookhaven experiment, 0.4 to 1.1 GeV/c.

b. Layout of Fermilab experiment, 23 to 370 GeV/c. For measurements at p GeV/c, the distance from target to transmission counters was p feet.

2. PWC system block diagram. Shown in the diagram are the vertical coordinates for the two upstream coordinates for the FNAL system. Not shown is the nearly identical system with 24 sense wires for the horizontal coordinates, or the simpler system for reading out the six coordinates of the downstream chambers.

3. Timing chart for PWC system. The lines on the leading edges of the PWC amplifier outputs and logic flip-flop are meant to indicate the typical timing jitter.

4. Construction of the chambers. The components are: A (pressure plate), B (Pulse Plane-Mesh) C, (H.V. Mesh) D (X Signal Wires) E (Mylar - Gas Window) F (G-10 Frames - 6 mm thick) G (Support Plate) H (Y Signal Wires).

5. Two out of eight channels of the receiver and readout card (R & R) are shown. Each of the three output channels has three signals; the output to the G.T.O. circuit (d_i), the output to the coincidence matrix (m_i) and the output to the read out (r_i).

6. The greater than one (G.T.O) circuit. Four such cards are ORed together.

7. The coincidence matrix for the vertical coordinates. The removable diode pins make connections between the two sets of wires in the matrix board.

8. The vertical profile of the incoming beam extrapolated from the PWC 1 and PWC 2 to the final focus in the BNL experiment. The solid line indicates the profile with the coincidence matrix included in the logic and the dotted line is without the coincidence matrix included.

Figure Captions - cont'd.

9. The partial cross sections for a carbon target with a 100 GeV/c beam focussed and defocussed for the cases of the coincidence matrix in or out of the read out logic.

4-672-73

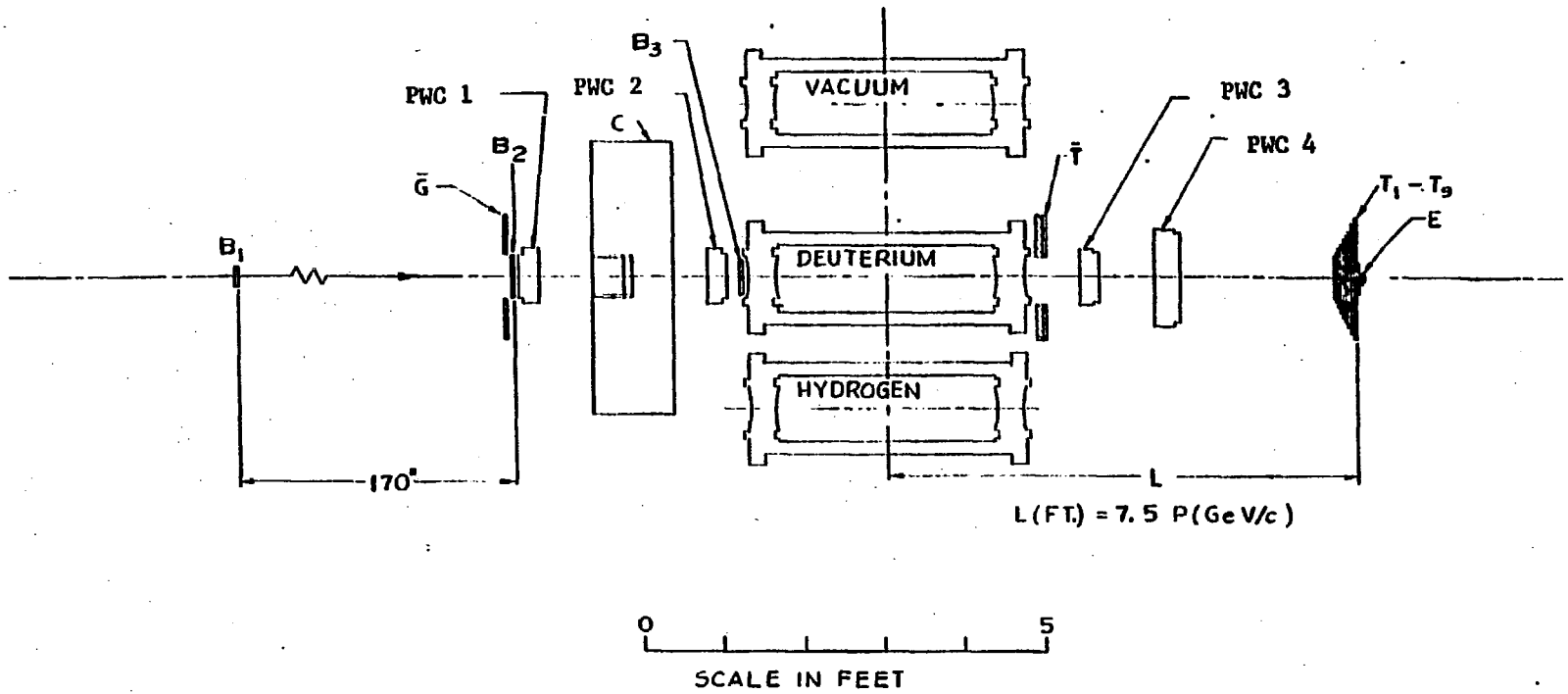

Fig. 1a

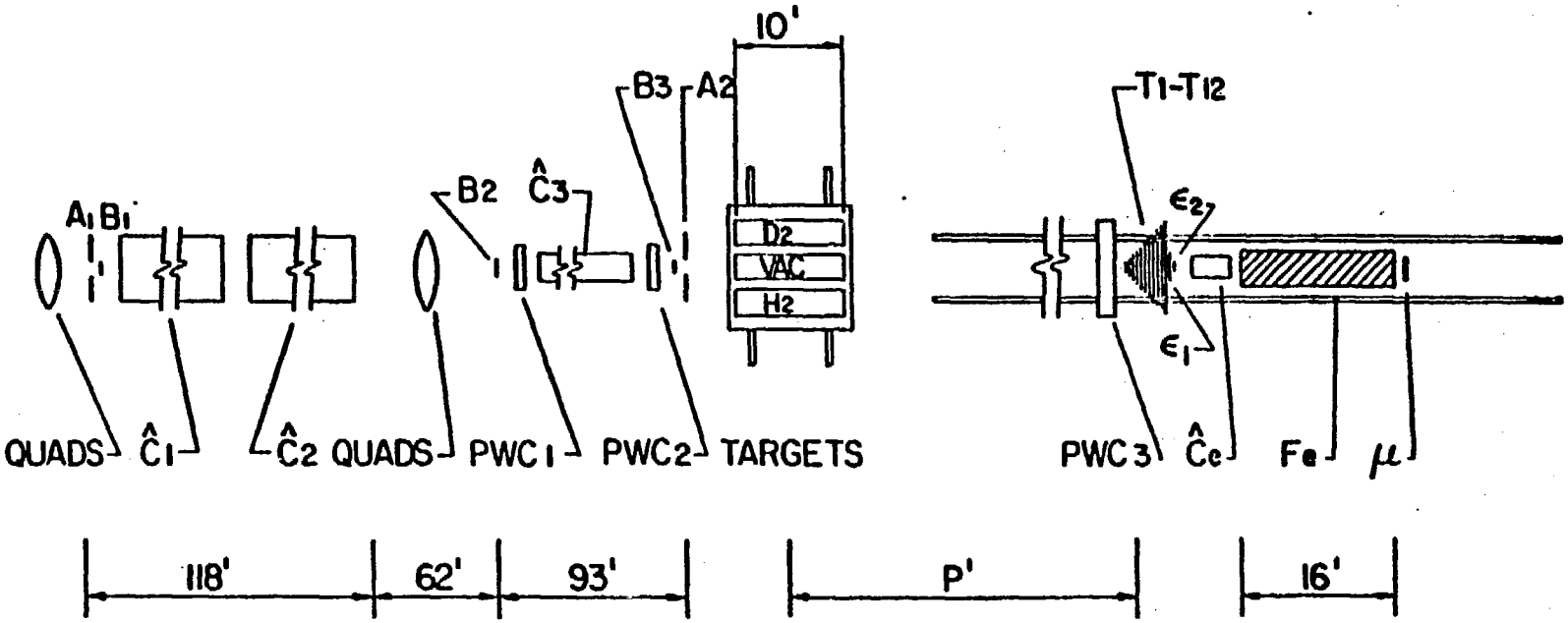
10'
B3
A2
T1-T12
B2
Ĉ3
A1 B1
D2
VAC
H2
ε2
ε1
QUADS
Ĉ1
Ĉ2
QUADS
PWC1
PWC2
TARGETS
PWC3
Ĉc
Fe
μ
118'
62'
93'
P'
16'

Fig. 1b

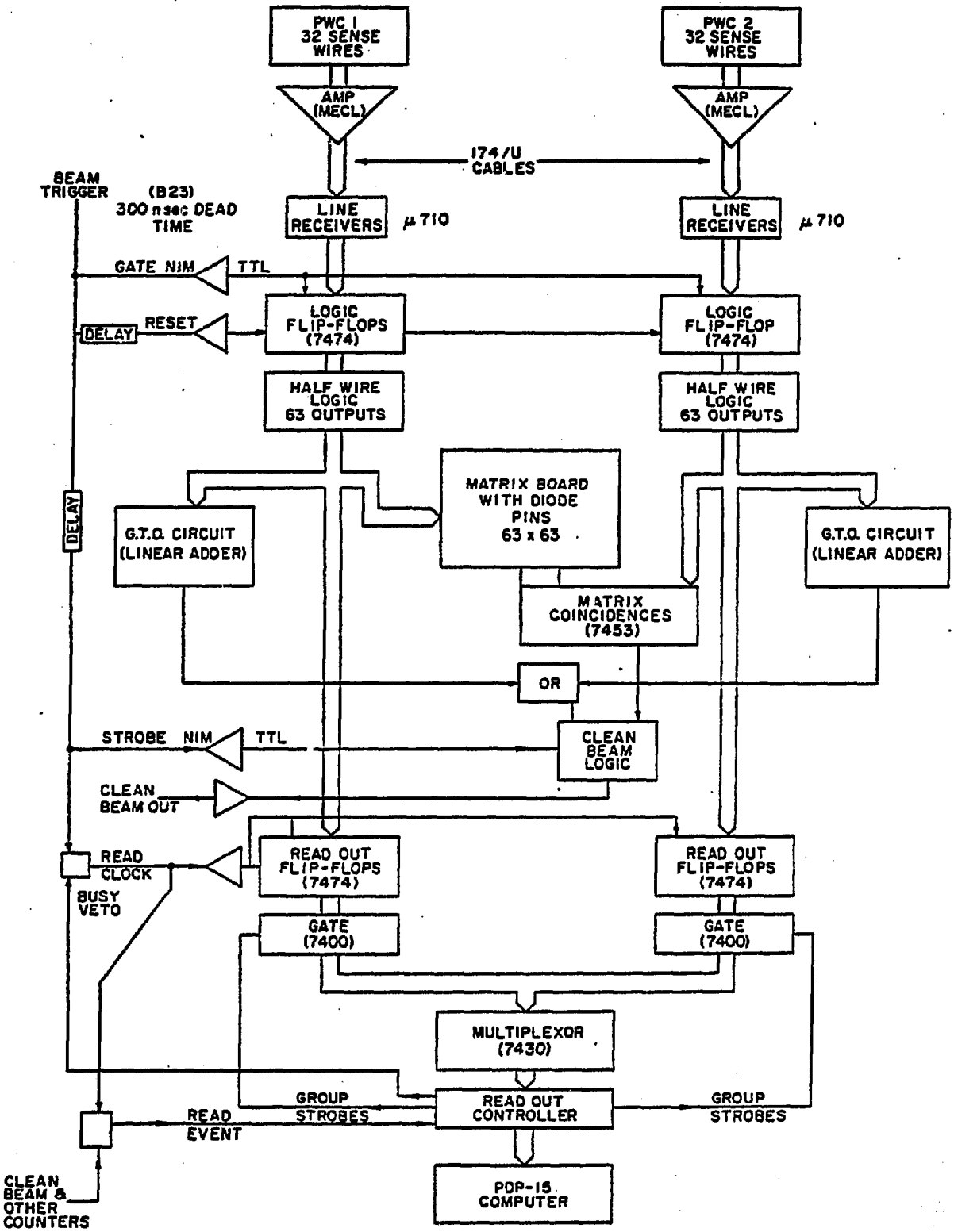
PWC 1
32 SENSE
WIRES
PWC 2
32 SENSE
WIRES
AMP
(MECL)
AMP
(MECL)
174/U
CABLES
BEAM
TRIGGER
(B23)
300 nsec DEAD
TIME
LINE
RECEIVERS
μ710
LINE
RECEIVERS
μ710
GATE NIM
TTL
DELAY
RESET
LOGIC
FLIP-FLOPS
(7474)
LOGIC
FLIP-FLOP
(7474)
HALF WIRE
LOGIC
63 OUTPUTS
HALF WIRE
LOGIC
63 OUTPUTS
DELAY
G.T.O. CIRCUIT
(LINEAR ADDER)
MATRIX BOARD
WITH DIODE
PINS
63 x 63
G.T.O. CIRCUIT
(LINEAR ADDER)
MATRIX
COINCIDENCES
(7453)
OR
STROBE
NIM
TTL
CLEAN
BEAM
LOGIC
CLEAN
BEAM OUT
READ
CLOCK
BUSY
VETO
READ OUT
FLIP-FLOPS
(7474)
READ OUT
FLIP-FLOPS
(7474)
GATE
(7400)
GATE
(7400)
MULTIPLEXOR
(7430)
GROUP
STROBES
READ OUT
CONTROLLER
GROUP
STROBES
READ
EVENT
CLEAN
BEAM &
OTHER
COUNTERS
PDP-15
COMPUTER

Fig. 2

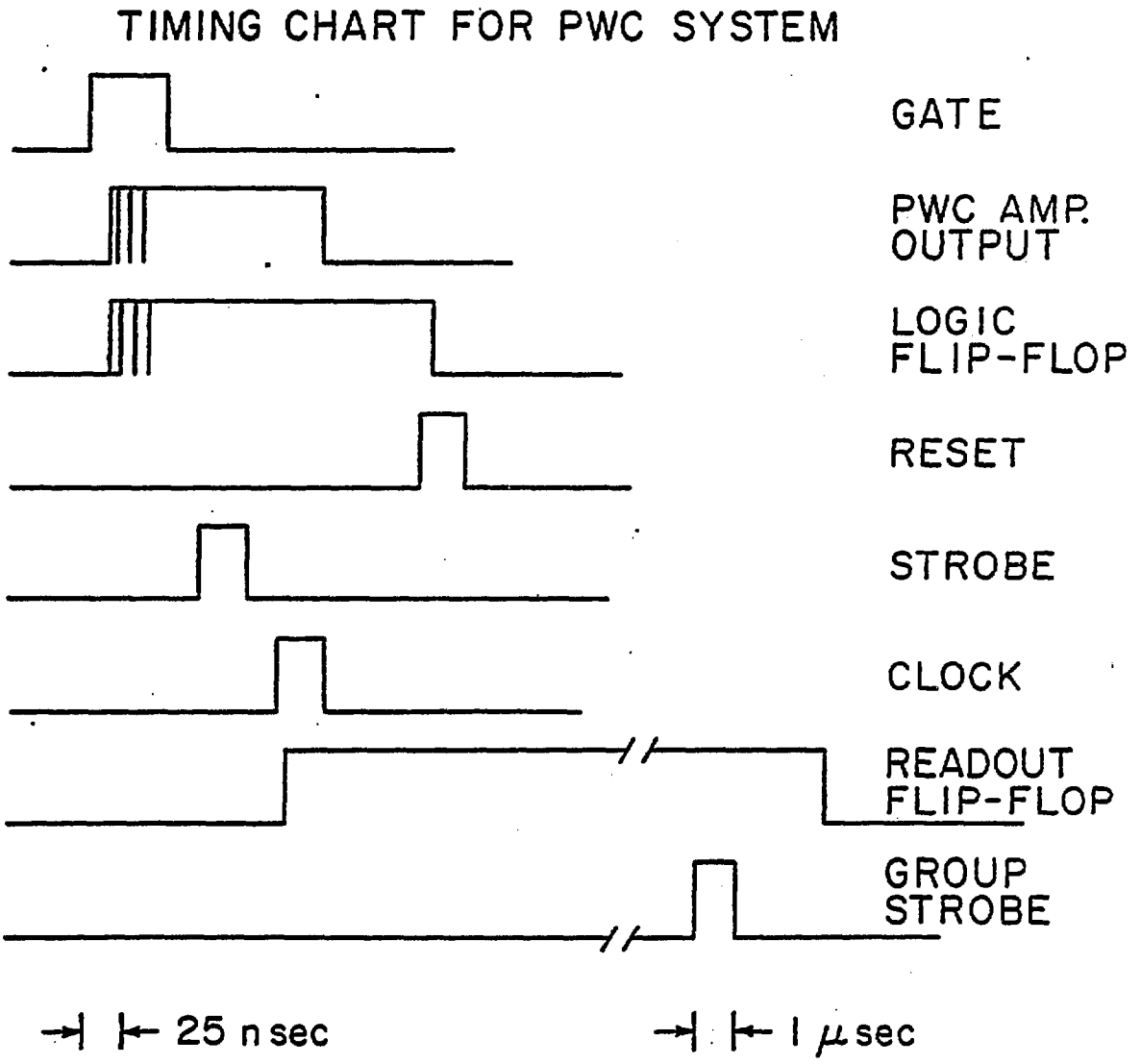
TIMING CHART FOR PWC SYSTEM
GATE
PWC AMP. OUTPUT
LOGIC FLIP-FLOP
RESET
STROBE
CLOCK
READOUT FLIP-FLOP
GROUP STROBE
25 n sec
1 μ sec

Fig. 3

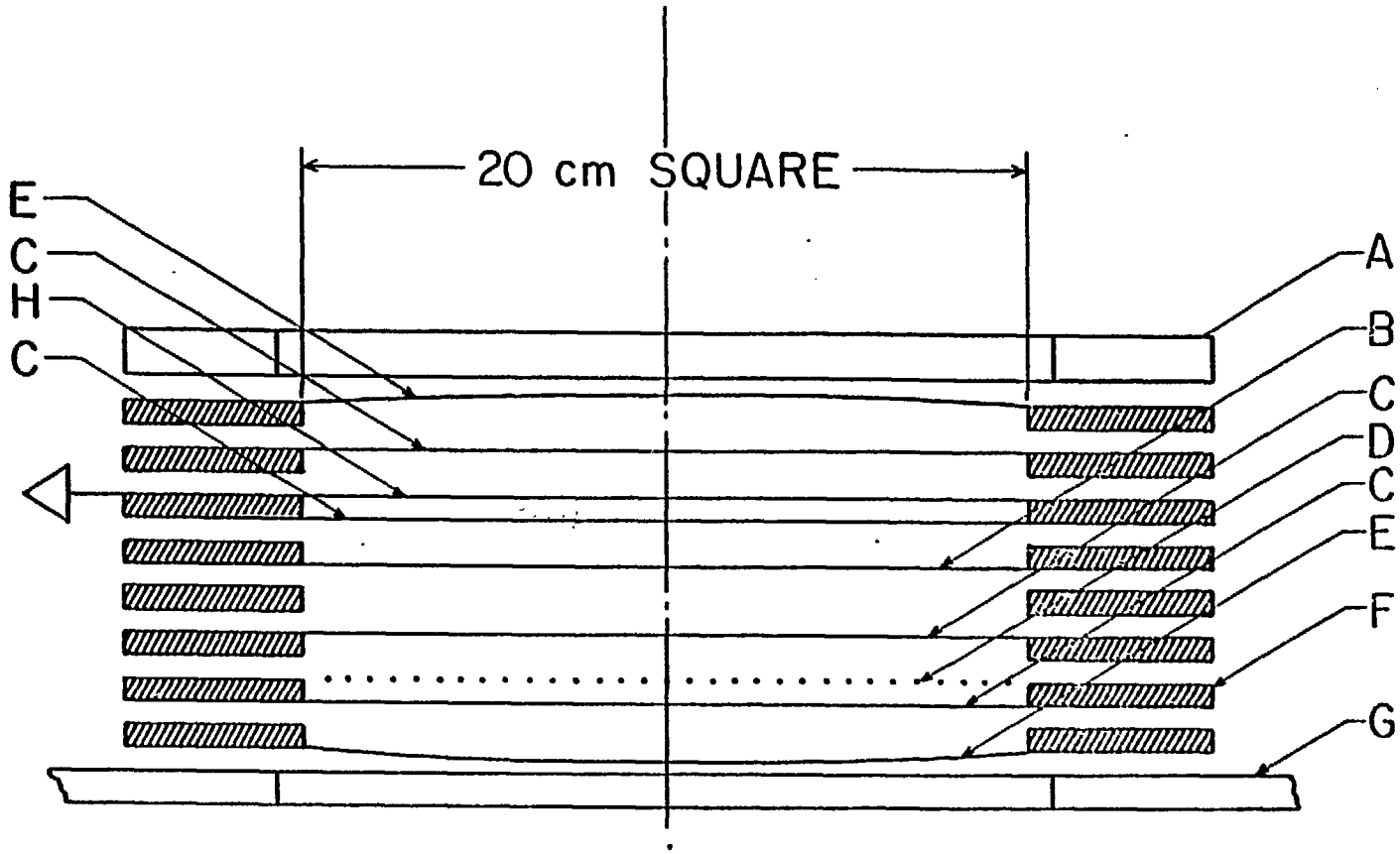

Fig. 4

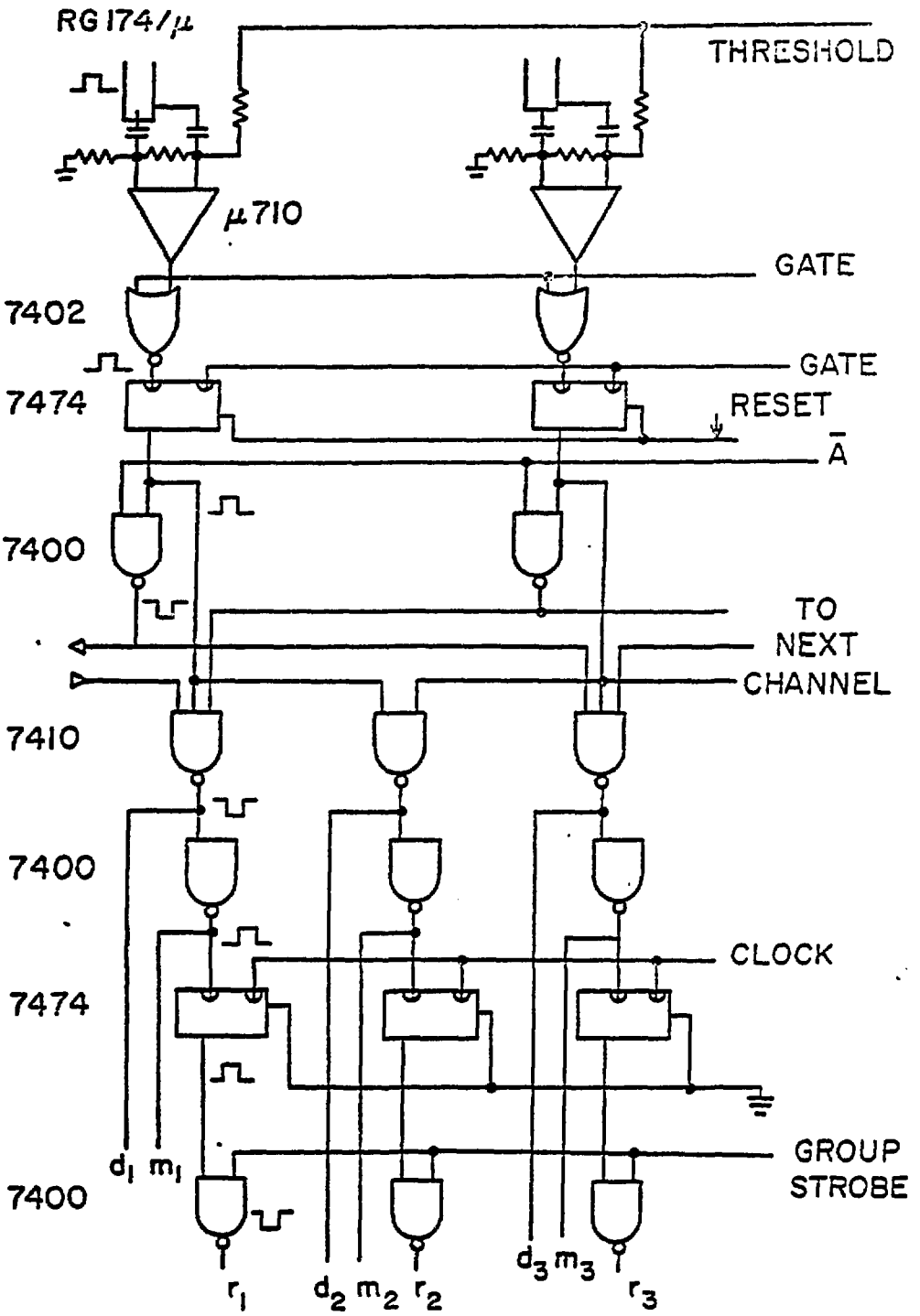
RG 174/μ
THRESHOLD
μ710
GATE
7402
GATE
7474
RESET
Ā
7400
TO
NEXT
CHANNEL
7410
7400
CLOCK
7474
GROUP
STROBE
7400
d1 m1
r1
d2 m2 r2
d3 m3
r3

Fig. 5

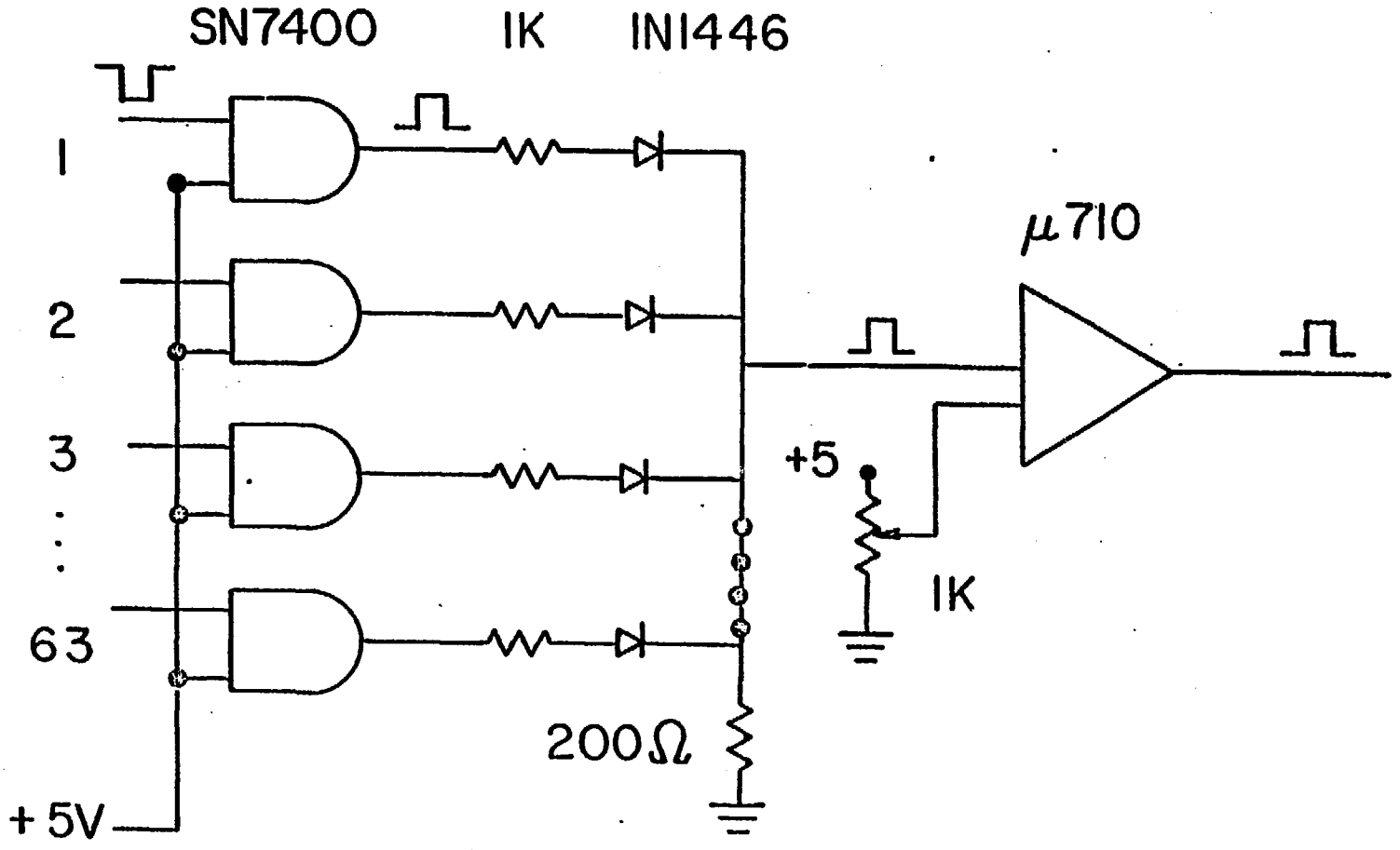

Fig. 6

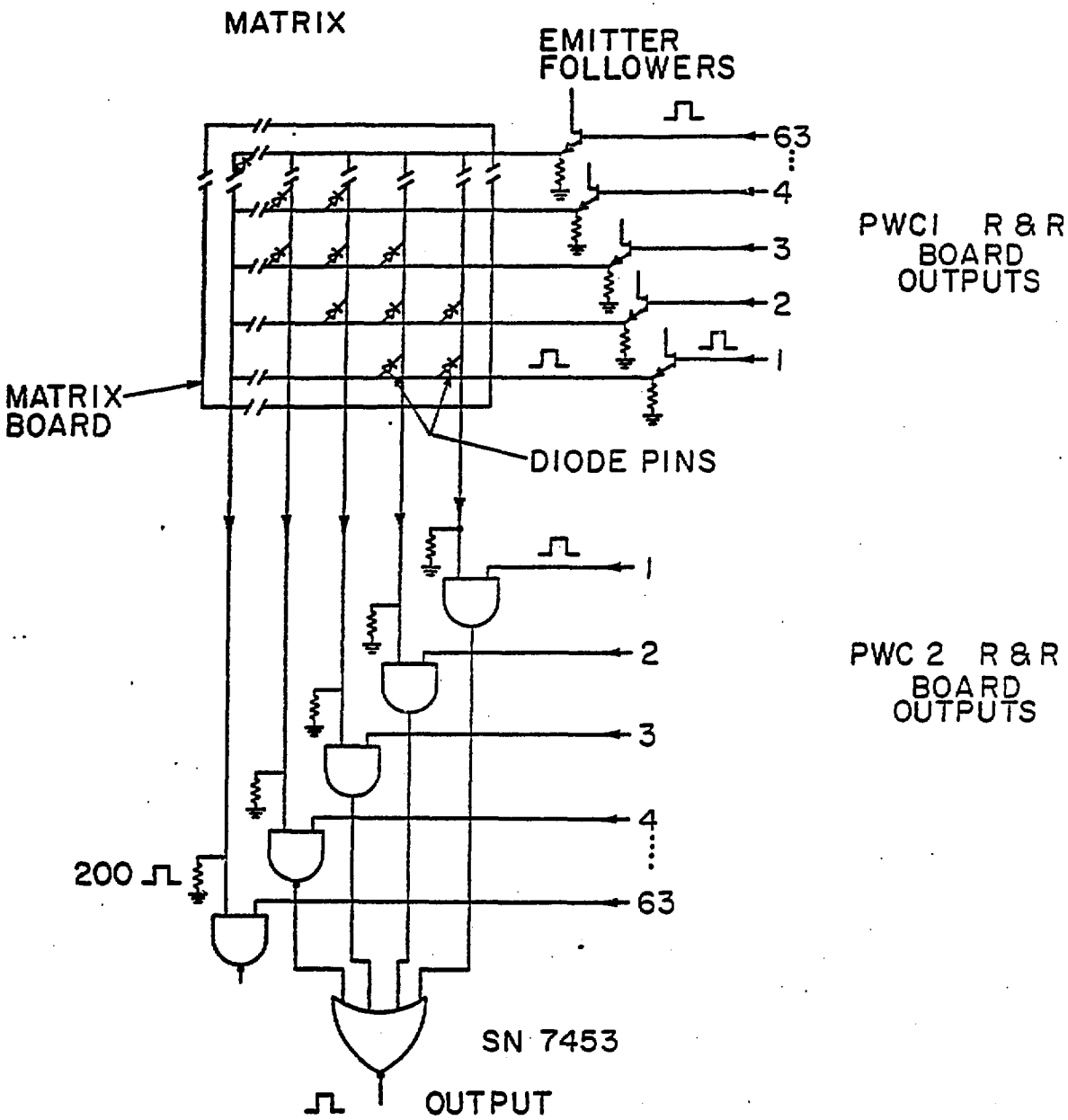
MATRIX
EMITTER FOLLOWERS
63
4
3
2
1
PWCI R & R BOARD OUTPUTS
MATRIX BOARD
DIODE PINS
1
2
3
4
63
PWC 2 R & R BOARD OUTPUTS
200
SN 7453
OUTPUT

Fig. 7

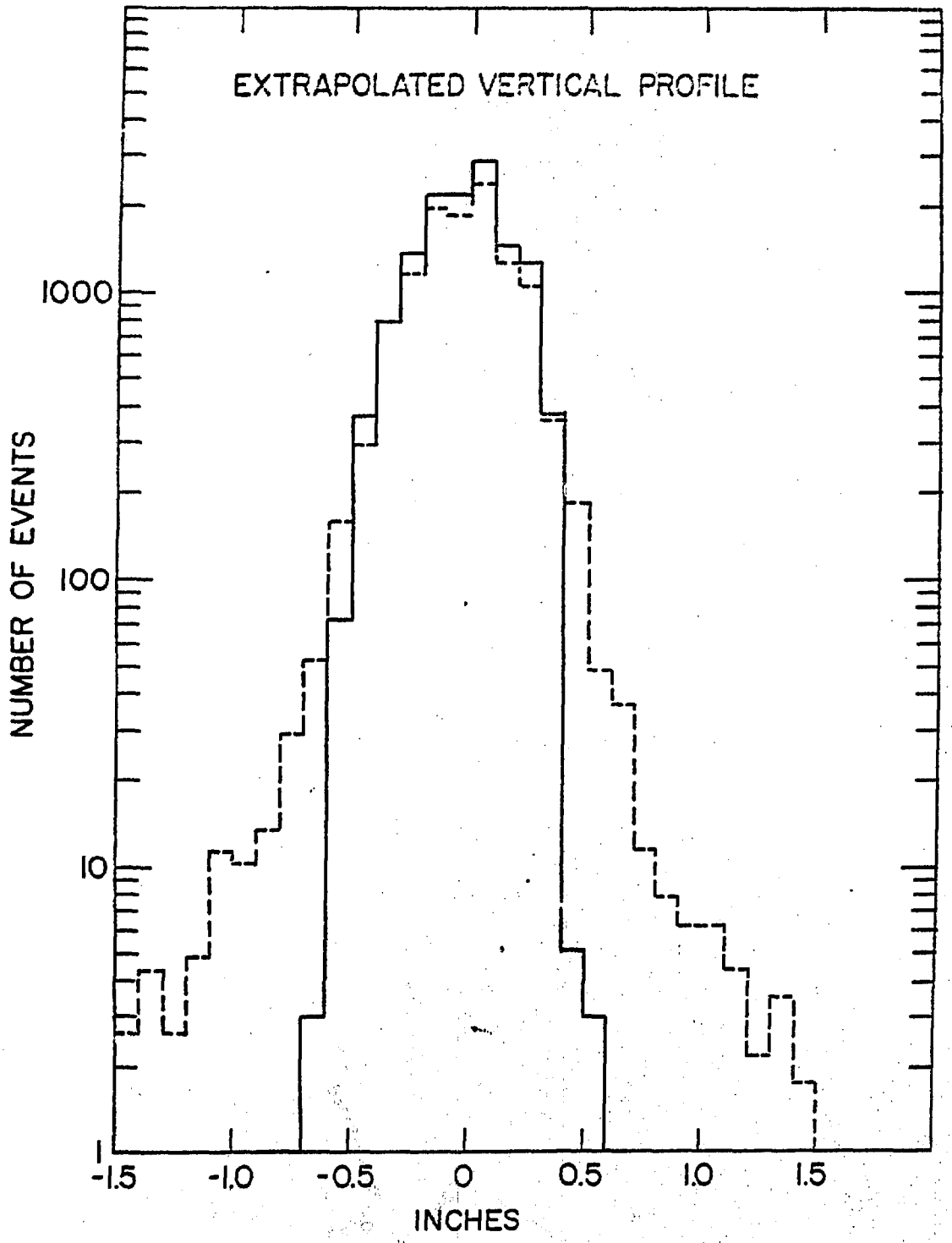
EXTRAPOLATED VERTICAL PROFILE
NUMBER OF EVENTS
1000
100
10
1
-1.5
-1.0
-0.5
0
0.5
1.0
1.5
INCHES

Fig. 8

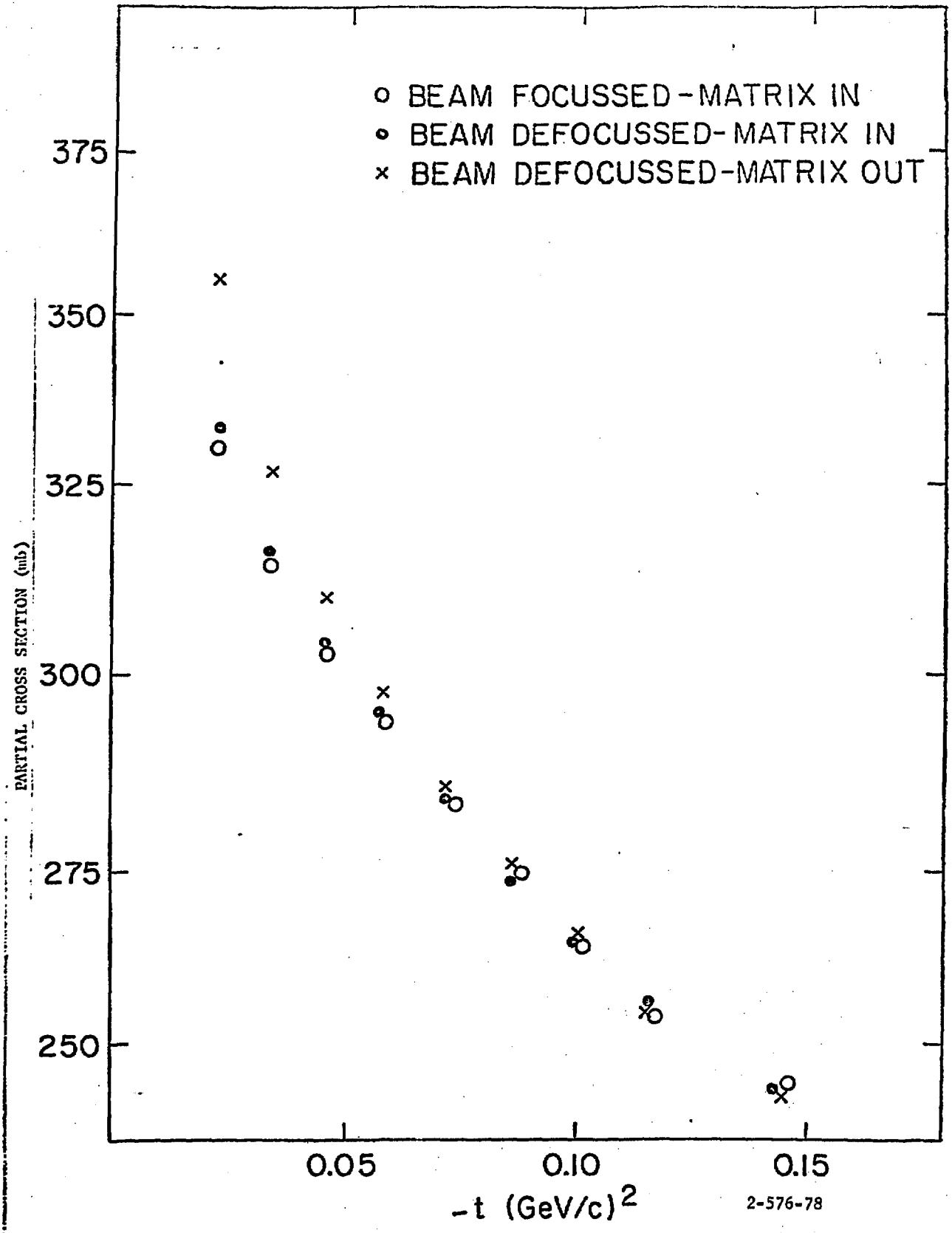
BEAM FOCUSSED-MATRIX IN
BEAM DEFOCUSSED-MATRIX IN
BEAM DEFOCUSSED-MATRIX OUT
375
350
325
300
275
250
PARTIAL CROSS SECTION (mb)
0.05
0.10
0.15
-t (GeV/c)^2
2-576-78