LA-10044-MS

I-14598

Los Alamos National Laboratory is operated by the University of California for the United States Department of Energy under contract W-7405-ENG-36.

COVER FILM

MASTER

An Aspen Simulation of Oil Shale Retort Off-Gas Cleanup with Venturi Scrubbers

Los Alamos National Laboratory
Los Alamos, New Mexico 87545

DISTRIBUTION OF THIS DOCUMENT IS UNLIMITED

DISCLAIMER

This report was prepared as an account of work sponsored by an agency of the United States Government. Neither the United States Government nor any agency Thereof, nor any of their employees, makes any warranty, express or implied, or assumes any legal liability or responsibility for the accuracy, completeness, or usefulness of any information, apparatus, product, or process disclosed, or represents that its use would not infringe privately owned rights. Reference herein to any specific commercial product, process, or service by trade name, trademark, manufacturer, or otherwise does not necessarily constitute or imply its endorsement, recommendation, or favoring by the United States Government or any agency thereof. The views and opinions of authors expressed herein do not necessarily state or reflect those of the United States Government or any agency thereof.

DISCLAIMER

Portions of this document may be illegible in electronic image products. Images are produced from the best available original document.

LA--10044-MS

DE84 011018

UC-91
Issued: February 1984

An Aspen Simulation of Oil Shale Retort Off-Gas Cleanup with Venturi Scrubbers

T. T. Phillips

DISCLAIMER

This report was prepared as an account of work sponsored by an agency of the United States Government. Neither the United States Government nor any agency thereof, nor any of their employees, makes any warranty, express or implied, or assumes any legal liability or responsibility for the accuracy, completeness, or usefulness of any information, apparatus, product, or process disclosed, or represents that its use would not infringe privately owned rights. Reference herein to any specific commercial product, process, or service by trade name, trademark, manufacturer, or otherwise does not necessarily constitute or imply its endorsement, recommendation, or favoring by the United States Government or any agency thereof. The views and opinions of authors expressed herein do not necessarily state or reflect those of the United States Government or any agency thereof.

MASTER

Los Alamos National Laboratory
Los Alamos, New Mexico 87545

DISTRIBUTION OF THIS DOCUMENT IS UNLIMITED

AN ASPEN SIMULATION OF OIL SHALE RETORT OFF-GAS CLEANUP WITH VENTURI SCRUBBERS

by

T. T. Phillips

ABSTRACT

A significant fraction of the product energy from oil shale retorting is contained in the retort off gas. Most oil shale processes use the retort off gas from plant fuel. The H_2S and NH_3 in retort off gas produce too much SO_2 and NOX to allow burning without a pollution control system. We used the ASPEN flowsheet simulator to model retort off-gas cleanup by venturi scrubbers. Venturi scrubbers are commonly used to remove particulates from gas streams, but the scrubbing liquid also absorbs some NH_3 and H_2S from the gas. The ASPEN venturi scrubber model makes good predictions of the particulate removal efficiency. The ASPEN estimates for H_2S and NH_3 absorption are higher than the equilibrium absorption predictions made by a state-of-the-art sour water vapor-liquid equilibrium model, TIDES. The discrepancy probably results from trying to simulate an electrolyte system with a vapor-liquid equilibrium model that is designed for molecular systems. The simulation indicates that a venturi scrubber may absorb enough NH_3 to serve as the primary NH_3 removal system. The H_2S absorption is quite low, however, and some other process is needed to remove the H_2S.

I. EXECUTIVE SUMMARY

We used the ASPEN flowsheet simulator to model NH_3 and H_2S removal from oil shale retort off gas with venturi scrubbers. We chose the Geokinetics *in situ* retorting process to provide the basis for this simulation. Only existing ASPEN unit operation and physical property models were used. Limiting our modeling to ASPEN's existing models was a significant constraint because

H_2S, NH_3, and CO_2 are weak electrolytes; that is, they form ions in aqueous solutions. ASPEN's standard physical property models are all specific to molecular systems. The ASPEN models predicted NH_3 and H_2S absorption levels up to 90 and 30%, respectively. TIDES, a state-of-the-art vapor-liquid equilibrium (VLE) model for weak electrolyte systems, estimated maximum NH_3 and H_2S absorptions of 50 and 3%, respectively. The NH_3 removal efficiency found in an experimental study of retort off-gas scrubbing was between the TIDES and ASPEN estimates. We believe that the TIDES predictions are closer to reality than the ASPEN predictions. The ASPEN venturi scrubber model calculated the particulate removal efficiency at 80%, which was very close to experimental values (for a 25% higher liquid rate) of 82 to 92%.

Both the ASPEN and TIDES estimates for H_2S absorption indicate that off-gas cleanup with venturi scrubbers gives inadequate H_2S removal. This shortcoming results from the system chemistry, not from the actual venturi scrubber; both TIDES and ASPEN optimistically assume equilibrium absorption of the gases. A venturi scrubber probably would provide adequate NH_3 removal from retort off gas on pollution control grounds alone, but the interaction of residual NH_3 on subsequent H_2S absorption must be investigated.

This study indicated several areas where ASPEN enhancements are needed. An existing ASPEN system for modeling electrolyte systems should be debugged and documented. ASPEN's Henry's law models do not work properly and should be debugged. Finally, ASPEN's venturi scrubber model needs to be modified so that it can handle suspended solids in the scrubbing liquid.

II. INTRODUCTION

The decrease in US domestic energy production compared to growing national consumption is putting pressure on the energy industry to use nontraditional energy resources. A potentially important resource that will be exploited in the near future is the Green River oil shale formation in southwest Wyoming, northwest Colorado, and northeast Utah. The oil shale in this formation could potentially produce 2 trillion barrels of shale oil. However, large-scale production must be very carefully designed to minimize the adverse environmental impact that will accompany the development of this resource.

An important aspect of economic oil shale production is to use as much of the shale's energy potential as possible. Thus, a successful process not only must give the maximum possible shale oil yield; it also must use the energy in

the carbon residue left on the shale after retorting and the energy in the retort off gases that are a by-product of the retorting process. The energy content of the retort off gases can range from 9 to 25% of the oil energy content in typical above-ground retorting.[1]

In *in situ* retorts, the situation is more complicated because substantial amounts of C_5-C_{12} hydrocarbons are not condensed from the retort off gas.[2-4] So, it is even more important that the heating value of the retort off gas be used. The off-gas heating value ranges from about 50 to 150 Btu/scf,[4] with average values of about 75 Btu/scf.* This low heating value precludes transporting this gas for export energy. Consequently, it must be burned on site as fuel gas. Data for the Geokinetics, Inc., Retort 25 indicate that off gas accounts for about 12% of the total product heating value.[5]

Retort off gas usually contains too much sulfur as H_2S and nitrogen as ammonia to permit burning without some cleanup process. Off gas from Geokinetics, Inc., *in situ* retorts contains around 1.5% H_2S and 1 vol% NH_3. Rinaldi, Thurnau, and Lotwala, who studied off-gas particulate removal with venturi scrubbers,[6] found that the scrubbers also removed from 50 to 75% of the NH_3. Because H_2S concentrations in the off gas were greater than their instruments could analyze, accurate calculation of H_2S removal was impossible. The sulfur content of the scrubbing liquid increased, so some H_2S was removed. The simplicity of venturi scrubbers and their potential for removing both particulates and gaseous pollutants make them promising candidates for retort off-gas cleanup.

The goal of this program was to evaluate venturi scrubbers for oil shale off-gas cleanup using only existing ASPEN physical property and unit operation models. ASPEN is a descendant of flowsheet simulators such as FLOWTRAN, CHEMSHARE, and CHEOPS that were developed in the late 1960s. DOE sponsored the development of ASPEN at the Massachusetts Institute of Technology (MIT) because the existing flowsheet simulators could not model plants that process substances such as coal and oil shale. More than 40 major companies were involved in the ASPEN industrial testing program as sponsors and as participants. The development of ASPEN reflects more than 150 man years of effort.

*This information was obtained from J. Lekas, Geokinetics, Inc., November 12, 1982.

The ASPEN code consists of over 350 000 lines of FORTRAN code and has more than 1500 subroutines.

ASPEN has been installed on the Los Alamos CRAY computers. It originally was developed on IBM computers, and its conversion for the CRAY 1 computer was a major challenge. To date, the Los Alamos CRAY version of ASPEN is the only successful single-precision version of ASPEN.

I chose the retort off gas from the Geokinetics, Inc., true *in situ* oil shale retorting process as the feed gas for the venturi scrubber.[7] The gas composition as calculated by ASPEN is given in Table I. The Geokinetics process is designed to economically retort oil shales that are close to the earth's surface. The off-gas composition is typical of the gases from surface and *in situ* shale retorts.

III. TECHNICAL BACKGROUND

A. ASPEN Venturi Scrubber Model (VSCRUB)

VSCRUB is based upon up-to-date design correlations for pressure drop and particulate collection efficiency.[8-10] In the model subroutines released by MIT, the units of measurement were handled incorrectly, so the program gave inaccurate results. That part of the code has been corrected. Another problem with VSCRUB is that it assumes that the scrubbing liquid does not contain any

TABLE I

COMPOSITION OF VENTURI SCRUBBER FEED GAS

Component	Mole Fraction
N_2	0.6393
O_2	0.0211
CO	0.0579
CO_2	0.2410
H_2S	0.0015
NH_3	0.0010
CH_4	0.0157
C_2H_4	0.0015
C_2H_6	0.0053
C_3H_6	0.0010
C_3H_8	0.0019
C_4H_8	0.0005
C_4H_{10}	0.0005
Oil	0.0114

suspended solids. Any solids in the inlet liquid stream are not transferred to the outlet liquid stream, so the unit operation block will not satisfy a mass balance. In practice, this limitation makes it impossible to incorporate a simple recycle of the scrubbing liquid into the flowsheet.

VSCRUB assumes that the exiting gas and liquid streams are in a state of VLE. This is not strictly correct because the liquid droplet residence time is not long enough to allow the gas and liquid to equilibrate.[11,12] However, equilibrium absorption of NH_3 and H_2S gives the maximum amount that can be absorbed, so VSCRUB will give a "best case" estimate for NH_3 and H_2S absorption.

B. Sour Water Equilibrium

Water containing dissolved H_2S, NH_3, and CO_2 is commonly known as sour water. These gases are called weak electrolytes because they react chemically when dissolved in water:

$$NH_3 + H_2O \rightleftharpoons NH_4^+ + OH^- \quad , \tag{1}$$

$$CO_2 + H_2O \rightleftharpoons HCO_3^- + H^+ \quad , \tag{2}$$

$$H_2S \rightleftharpoons H^+ + HS^- \quad , \text{ and} \tag{3}$$

$$HS^- \rightleftharpoons H^+ + S^= \quad . \tag{4}$$

Water also dissociates,

$$H_2O \rightleftharpoons H^+ + OH^- \quad . \tag{5}$$

The chemical reactions in Eqs. (1) through (5) are reversible and attain a state of chemical equilibrium when VLE exists in a sour water-sour gas system. Unfortunately, the public version of ASPEN is designed to handle molecular species only. A limited capability to model electrolyte systems was added to ASPEN just before its public release, but this capability is undocumented and can be accessed only as a simple flash.[13] Because this study was intended to use only standard ASPEN capabilities, I did not attempt to use ASPEN's undocumented electrolyte system.

I used two computer models for sour water equilibria to generate sour water VLE data: SWEQ, which was written by G. M. Wilson, and TIDES, which was written by E. M. Pawlikowski et al.[14,15] Because I acquired SWEQ first, I used it to generate pseudo binary data that then were correlated using ASPEN's data regression system. SWEQ works for systems containing NH_3, H_2S, CO_2, and H_2O only, that is, SWEQ does not permit inert diluents. The data were developed by first specifying a base case where the mole fractions of NH_3, H_2S, and CO_2 in the gas phase were in accordance with their molar ratios in retort off gas and specifying the total pressure as the sum of the partial pressures of NH_3, H_2S, CO_2, and H_2O in the feed gas. The base case is defined in Tables II and III. Then, the pseudo binary data for NH_3 were obtained by instructing SWEQ to calculate VLE compositions for several cases where the amounts of H_2S, CO_2, and H_2O are held constant while NH_3 is varied. The same procedure was used for CO_2 and H_2S.

The data cannot be correlated by ASPEN's data regression system until a VLE model has been selected. ASPEN has several options available for VLE calculations as shown in Table IV. I chose the SYSOP8 option set, which includes the Redlich-Kwong equation of state for the vapor phase, and Redlich-Kwong plus the Antoine vapor pressure correlation and G. M. Wilson's liquid activity coefficient model for the liquid phase.[16] ASPEN's Technical Reference Manual states that Wilson's model can be used for highly nonideal systems.[8]

I attempted to use Henry's law to correlate the vapor pressure for the gases in this system. Unfortunately, ASPEN's Henry's law routines did not execute correctly. The problem seems to be caused by an error in the physical

TABLE II

VAPOR PHASE COMPOSITIONS FOR GENERATING RETORT OFF-GAS VLE DATA WITH SWEQ

Component	Base Case Mole Fraction	Mole Fraction Range Considered
NH_3	0.001567	0.0001567 - 0.004701
H_2S	0.004408	0.0004408 - 0.01322
CO_2	0.9735	0.9100 - 0.9800
H_2O	0.0205	

TABLE III

TEMPERATURES AND PRESSURES
FOR GENERATING RETORT OFF-GAS VLE DATA WITH SWEQ

Temperature (°C)	Pressure (psia)
15	5.068
30	5.450
45	6.229

TABLE IV

ASPEN VLE MODELS

Option Set	Vapor Phase	Liquid Phase
SYSOP0	Ideal Gas	Ideal Liquid + Antoine Vapor Pressure
SYSOP1	Redlich-Kwong	Scatchard-Hildebrand + Chao-Seader
SYSOP2	Redlich-Kwong	Scatchard-Hildebrand + Grayson-Streed
SYSOP3	Redlich-Kwong-Soave	Redlich-Kwong-Soave
SYSOP4	Peng-Robinson	Peng-Robinson
SYSOP5	Benedict-Webb-Rubin	Benedict-Webb-Rubin
SYSOP8	Redlich-Kwong	Redlich-Kwong + Antoine + Wilson
SYSOP9	Redlich-Kwong	Redlich-Kwong + Antoine + Van Laar
SYSOP10	Redlich-Kwong	Redlich-Kwong + Antoine + Renon
SYSOP11	Redlich-Kwong	Redlich-Kwong + Antoine + Uniquac

property calculation routes that are encoded in ASPEN's system definition file. Unfortunately, I did not have time on this project to locate and correct the errors.

C. Discussion of Results

The VLE predictions by the data regression system and the pseudo binary data for NH_3 and H_2S are shown in Figs. 1 and 2. These results implied that SYSOP8 would be an adequate model for the VLE of retort off gas. The fit of the CO_2 data was not as good. Because our main interest in this study was

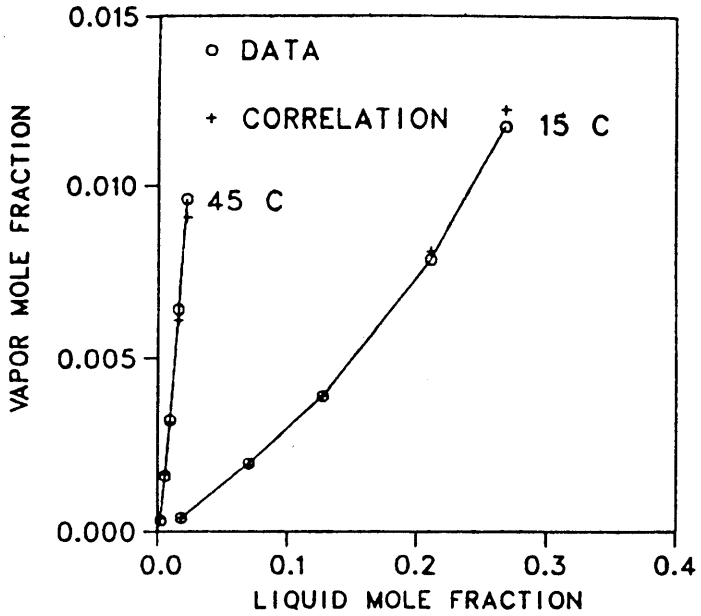

Fig. 1. ASPEN SYSOP8 correlation of NH_3-H_2O equilibrium data.

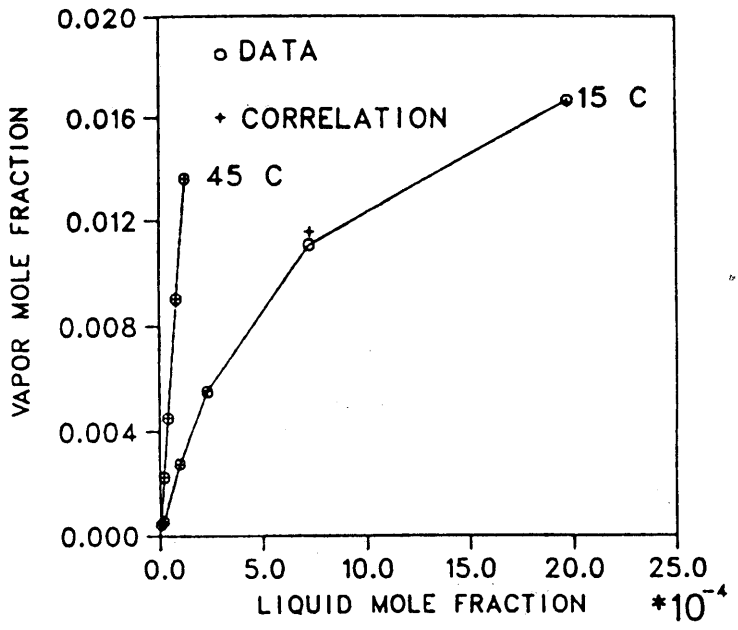

Fig. 2. ASPEN SYSOP8 correlation of H_2S-H_2O equilibrium data.

the absorption of NH_3 and H_2S in the scrubber, the poor fit of the CO_2 data was acceptable.

The important elements of the process flowsheet are shown in Fig. 3. The shale retorting and combustion reactions and decomposition of $MgCO_3$ and $CaCO_3$ take place in RXR1. The stoichiometry for the retorting process is given by

$$\begin{aligned} 14.40 \text{ lb kerogen} + 0.360\ O_2 \rightarrow\ & 0.792 \text{ lb char} + 0.244\ H_2 + 0.0269\ H_2O \\ & + 0.140\ CO + 0.300\ CO_2 + 0.00365\ H_2S \\ & + 0.00253\ NH_3 + 0.0381\ CH_4 + 0.00369\ C_2H_4 \\ & + 0.0129\ C_2H_6 + 0.00234\ C_3H_6 + 0.00466\ C_3H_8 \\ & + 0.00123\ C_4H_8 + 0.00121\ C_4H_{10} + 5.36\ lb_m \text{ oil} \quad . \end{aligned} \tag{6}$$

This stoichiometric equation was developed from Geokinetics data for their Retort 25 using a computer program, MB73, that was developed at Sandia National Laboratories Albuquerque.[17] The water produced by the retort is diverted from the fluid product stream in the separator block SP1. After a small air leak stream is mixed with the dry product stream in MXR6, it goes through a compressor and a heat exchanger before entering the venturi scrubber, VS1. The water stream from SP1 is mixed with a second water stream that corresponds to a recycle of the scrubbing liquid, except that no suspended solids are in the second stream. The combined stream passes through a heat exchanger before entering the scrubber. I would have preferred to recycle a portion of the scrubbing liquid back to MXR7, but the above-mentioned bug in the ASPEN code made this impossible.

The ASPEN venturi scrubber model distributes the fluid effluent from the retort between the gas and liquid streams by flashing the combined streams. We obtained the TIDES computer program shortly before completing this work; TIDES is probably the best available nonproprietary model for sour water VLE. Unlike SWEQ, TIDES can make flash calculations in the presence of N_2, O_2, CO, and many light hydrocarbons. Thus, I was able to use TIDES as an independent check on the ASPEN flash calculation.

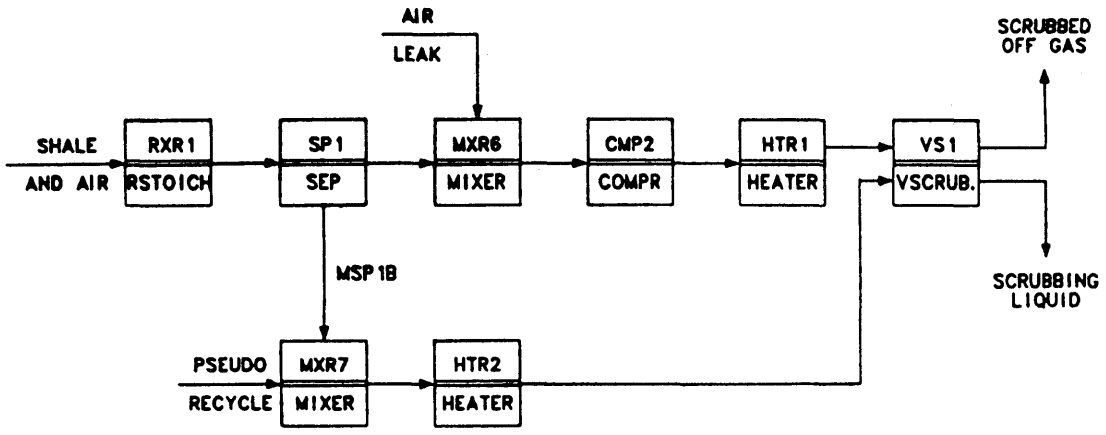

Fig. 3. Retort and scrubber sections of Geokinetics process flowsheet.

The NH_3 and H_2S absorption levels calculated by ASPEN and TIDES are shown in Figs. 4 and 5. The abscissas in these figures correspond to recycle ratios from 0 to 10. That is, for a recycle ratio of 10, the flow rate of the pseudo recycle stream (see Fig. 3) is 10 times the flow rate of the water in stream MSP1B. TIDES predicts a decrease in the NH_3 absorption at higher liquid rates because the pseudo recycle stream contains some NH_3.

ASPEN predicts much higher absorption of both H_2S and NH_3 than TIDES does. I believe that the TIDES calculations probably are correct. The most significant source of the discrepancy between ASPEN and TIDES may be that the VLE model in SYSOP8 is designed for molecular species and is not adequate to model electrolyte systems. Possibly SYSOP8 would have performed better if TIDES had been used to generate the pseudo binary data that were regressed to obtain the model parameters. Rinaldi et al. give average values for NH_3 removal of 62%; that removal level lies between the estimates of TIDES and ASPEN.[6]

Figure 6 shows the particulate removal efficiency predicted by ASPEN, which calculated an 80% scrubbing efficiency at the highest liquid rate. The 10:1 recycle gives a liquid:gas ratio of 1.2×10^{-3}. Rinaldi et al. measured particulate removal efficiencies of 82 to 90% at a liquid:gas ratio of 1.5×10^{-3}; thus, ASPEN compares very favorably with the experimental measurement.[6]

Even the high levels of H_2S removal predicted by ASPEN would be too low to allow the scrubber to be used as the sole H_2S removal device for oil

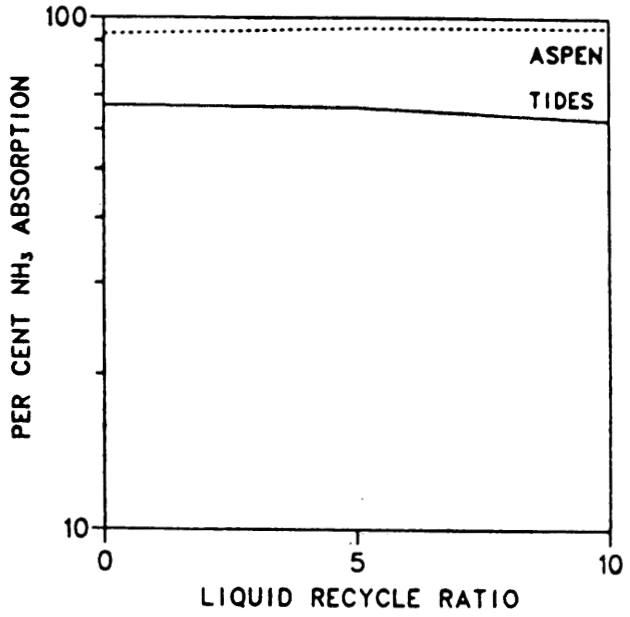

Fig. 4. Model estimates for NH_3 absorption in the venturi scrubber.

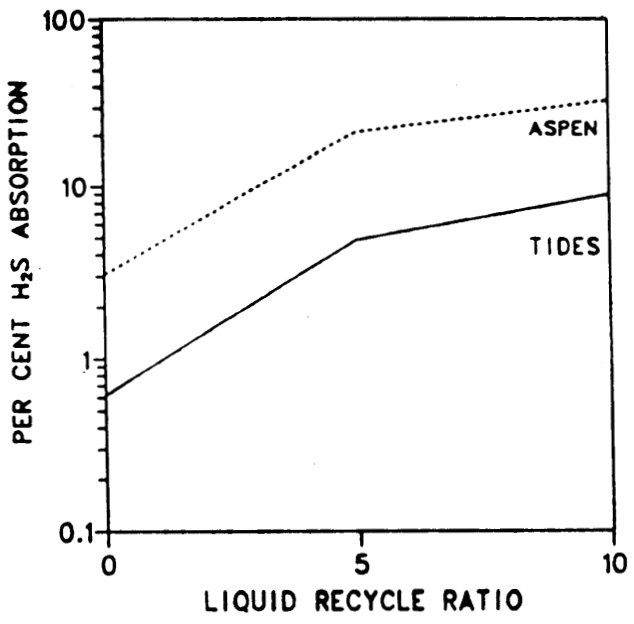

Fig. 5. Model estimates for H_2S absorption in the venturi scrubber.

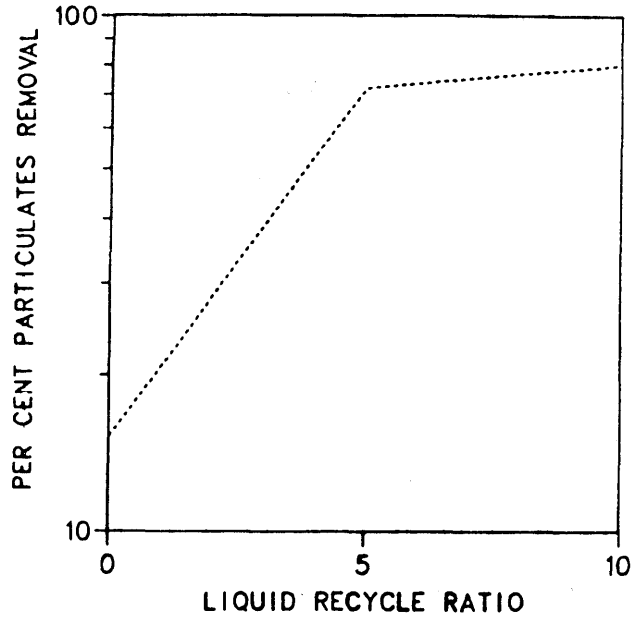

Fig. 6. ASPEN estimates for particulates removal in the venturi scrubber.

shale off gas. The H_2S removal rate could be increased by adding caustic to the scrubbing liquid, but I am unsure how that would affect the NH_3 removal. I have not investigated that option because neither ASPEN nor TIDES models VLE for systems containing caustic. SWEQ can model sour water-caustic systems, but SWEQ cannot handle the other gases that are in retort off gas. Also note that scrubbing the off gas with the retort waters will increase the pollution potential of those waters, so water treatment costs for the shale oil complex probably will increase.

This study has highlighted some significant deficiencies in ASPEN. The most important point is that the electrolyte system should be tested, debugged, and documented. A robust electrolyte VLE capability would significantly enhance the usefulness of ASPEN. Second, the Henry's law VLE models need to be debugged. Henry's law is an excellent model for many common VLE systems. Finally, ASPEN's venturi scrubber model should be modified to handle recycled liquids correctly. I believe this will require extensive modifications to the code.

REFERENCES

1. J. B. Jones and R. N. Heistand, "Recent Paraho Operations," in 12th Oil Shale Symposium Proceedings, James H. Gary, Ed. (Colorado School of Mines, Golden, Colorado, 1979), pp. 184-194.

2. P. J. Hommert, "Instrumentation and Data Analysis from Occidental Retorts MR-J and MR-4," in 15th Oil Shale Symposium Proceedings, James H. Gary, Ed. (Colorado School of Mines, Golden, Colorado, 1982) pp. 252-276.

3. C. E. Tyner, R. L. Parrish, B. H. Major, and J. M. Lekas, "Sandia/Geokinetics Retort 23: A Horizontal *In Situ* Retorting Experiment," in 15th Oil Shale Symposium Proceedings, James H. Gary, Ed. (Colorado School of Mines, Golden, Colorado, 1982).

4. C. E. Tyner, R. L. Parrish, B. H. Major, and J. M. Lekas, "Evaluation of a Horizontal *In Situ* Oil Shale Retorting Experiment," Sandia National Laboratories report SAND 81-2087. (Presented at the AIChE National Meeting, Anaheim, California, June 7, 1982).

5. L. Wege, "Investigation of the Geokinetics Horizontal *In Situ* Oil Shale Retorting Process," 6th Annual Report, Geokinetics, Inc., report DOE/LC/10787-109 (April 1983).

6. G. M. Rinaldi, R. C. Thurnau, and J. T. Lotwala, "Wet Scrubbing for Control of Particulate Emissions from Oil Shale Retorting," in 14th Oil Shale Symposium Proceedings, James H. Gary, Ed. (Colorado School of Mines, Golden, Colorado, 1981).

7. M. A. Lekas, "The Geokinetics Horizontal *In Situ* Retorting Process," in 14th Oil Shale Symposium Proceedings, James H. Gary, Ed. (Colorado School of Mines, Golden, Colorado, 1981).

8. "ASPEN Technical Reference Manual," Massachusetts Institute of Technology Department of Chemical Engineering (Manual prepared under USDOE Contracts Nos. E(49-18)-2295 and DE-AC21-81MC16481).

9. S-C Yung, H. F. Barbarika, and S. Calvert, "Pressure Loss in Venturi Scrubbers," JAPCA 27, 348 (1977).

10. S-C Yung, S. Calvert, and H. F. Barbarika, "Venturi Scrubber Performance Model," Environ. Sci. Tech. 12, 456 (1978).

11. S. Uchida and C. Y. Wen, "Gas Absorption by Alkaline Solutions in a Venturi Scrubber," IEC Process Design Develop 12, 437 (1973).

12. D. O. Cooney, "Modeling Venturi Scrubber Performance for H_2S Removal from Oil Shale Retort Gases," AIChE Annual Meeting, Washington, DC, October 30--November 4, 1983.

13. C. C. Chen, Computer Simulation of Chemical Processes with Electrolytes, Ph.D. thesis, Massachusetts Institute of Technology (June 1980).

14. G. M. Wilson, "A New Correlation of NH_3, CO_2, and H_2S Volatility Data from Aqueous Sour Water Systems," API Pub. No. 955 (American Petroleum Institute, Washington, DC, 1978).

15. E. M. Pawlikowski, J. Newman, and J. M. Prausnitz, "Vapor-Liquid Equilibrium Calculations for Aqueous Mixtures of Volatile, Weak Electrolytes and Other Gases for Coal Gasification Processes," in Chemical Engineering Thermodynamics, S. A. Newman, Ed. (Ann Arbor Science Publishers, Ann Arbor, Michigan, 1982), Chap. 27.

16. G. M. Wilson, "Vapor-Liquid Equilibrium. XI. A New Expression for the Excess Free Energy of Mixing," J. Am. Chem. Soc. 86, 127 (1964).

17. P. J. Hommert, "Instrumentation and Data Analysis from Occidental Retorts MR-3 and MR-4," in 15th Oil Shale Symposium Proceedings, James H. Gary, Ed. (Colorado School of Mines, Golden, Colorado, 1982).