Conf-771132--6

MASTER

A MODEL AIR-SUPPORTED DRUM-TYPE HOMOPOLAR GENERATOR

R. L. Kustom, R. E. Fuja, R. B. Wehrle,
R. P. Smith, and T. J. Kovarik

NOTICE
This report was prepared as an account of work sponsored by the United States Government. Neither the United States nor the United States Department of Energy, nor any of their employees, nor any of their contractors, subcontractors, or their employees, makes any warranty, express or implied, or assumes any legal liability or responsibility for the accuracy, completeness or usefulness of any information, apparatus, product or process disclosed, or represents that its use would not infringe privately owned rights.

Prepared for

Seminar on Energy Storage, Compression
and Switching
Canberra, Australia
November 15-21, 1977

DISTRIBUTION OF THIS DOCUMENT IS UNLIMITED

U of C-AUA-USDOE

ARGONNE NATIONAL LABORATORY, ARGONNE, ILLINOIS

Operated under Contract W-31-109-Eng-38 for the
U. S. DEPARTMENT OF ENERGY

A MODEL AIR-SUPPORTED DRUM-TYPE HOMOPOLAR GENERATOR*

R. L. Kustom, R. E. Fuja, R. B. Wehrle,
R. P. Smith, and T. J. Kovarik

Argonne National Laboratory, Argonne, IL 60439 USA

ABSTRACT

A single cylinder, drum-type homopolar generator has been designed and built for the purpose of developing a simple air support system for thin cylinder rotors operated at high surface velocities and significant radial drum growth. The model has an aluminum cylinder which is 0.32 cm thick, 25 cm in diameter, and 12.7 cm long. It is designed to operate at a peak current of 2500 A and to store a total of 40 kJ with a surface velocity of 305 m/sec.

The drum is mounted over a fiberglass cylinder with its axis vertical. The space between the drum and the fiberglass cylinder form a pressurized air cavity. The drum is bounded between flat surfaces. Air escapes from the cavity between the edges of the cylinder and the flat surfaces. This provides the air lift to support the cylinder.

Brushes are located at the edges of the cylinder in four clusters of eight brushes. The brush diameter is 0.36 cm. The peak current density is 781 A/cm^2. The brush material is Morganite CM1S.

A radial magnetic field is provided by an iron core system using two copper coils. The field strength is 1.05 T.

The model is in the initial stages of operation. It has been operated at 3500 rpm with a dc current of 100 A to test the air support system. It has been pulsed with 500 A peak current. Some problems have been encountered in the brush holder system which have required modifications. These modifications are in progress.

*Work supported by the U. S. Department of Energy.

A MODEL AIR-SUPPORTED DRUM-TYPE HOMOPOLAR GENERATOR*

R. L. Kustom, R. E. Fuja, R. B. Wehrle,
R. P. Smith, and T. J. Kovarik

Argonne National Laboratory, Argonne, IL 60439 USA

INTRODUCTION

The Argonne National Laboratory (ANL) reference Tokamak Experimental Power Reactor (TEPR) (Stacey 1977) design is representative of ohmic heating (OH) coil system driving requirements for not only the first generation of magnetic fusion power reactors, but also of the requirements for typical commercial reactors (Kustom 1977). Energy on the order of hundreds to thousands of megajoules must be transferred out of and back into the OH coil in a period of a few seconds with reversal of the magnetic field.

The ANL TEPR design is based on pulsed superconducting coils which operate with a maximum current in the range of a hundred thousand amperes, a value assumed to be typical of where pulsed superconducting coils would be practical. Of course, parallel connection of pulsed superconducting coils might be possible; but operating the OH system with currents in the megaampere level leads to a whole different set of problems in technology and economics which ultimately must be compared to a system limited to a current level of about a hundred thousand amperes. The ANL approach to providing an economical homopolar generator system operated at tens of kilovolts and about a hundred thousand amperes is to radially stack, air-supported thin conducting cylinders which are electrically connected in series so that the drums will counter-rotate (Kustom 1975). The air support system is provided through rigidly aligned insulating drums. This configuration, which we call the counter cyclonic generator (CCG), is shown in Fig. 1.

The CCG configuration has a number of features which need to be investigated before its technological advantages and disadvantages can be fully assessed. The air support system should be as simple as possible without the need for more precession type machining than standard machine tolerances. The cylinders should be driven to the highest surface velocities--short of destruction, brush, or fatique problems--to achieve the highest possible energy densities and to make fullest utilization of the exciting field. The multiple drum array on their respective air support systems must be dynamically stable.

*Work supported by the U. S. Department of Energy.

A simple shell, 40 kJ model has been designed and built for the purpose of testing some of the technological problems which might be encountered. The facility is called HOPE I for homopolar experiment I. Sufficient inductive energy is available, 60 kJ, so that it should be possible to well exceed the elastic yield strength of the aluminum drum material if all the energy can be delivered to the rotating drum. The first goals of the experiment are to test simple air support techniques when the drum is driven to sufficiently high velocities to see the radial growth of the drum. If dynamical instabilities develop, these will be investigated and means of suppressing them will be developed. Eventually, a two-shell model will be built, and dynamical stability with multiple drums will be tested.

1 DESIGN OF 40 KJ MODEL

A 40 kJ model, made of 6061-T6 aluminum, has been designed and built around an existing magnet and 60 kJ choke. The conducting cylinder has a radial thickness of 0.32 cm, a diameter of 25 cm, and an axial length of 12.7 cm. The model will store 40 kJ when the surface velocity of the cylinder reaches 305 m/sec. The cylinder is expected to expand about 0.04 cm (0.016 in.) in the radial direction at the maximum surface velocity.

The current collection system on each end of the drum consists of four groups of brushes which are separated 90° from each other around the cylinder. They are designed to make contact on the bottom and top edges of the cylinder. A cross section of a single brush is shown in Fig. 2. The brush has a diameter of 0.36 cm and the air piston has a diameter of 0.39 cm. Eight identical brush arrangements are clustered in the four groups. The brush material is Morganite CM1S: copper (81%), graphite (11%), tin (4.5%), and lead (2%). The surfaces of the aluminum drum in contact with the brushes have plasma flame deposited layers of copper. The current collection technique and materials were recommended by W. Weldon (Weldon). A fiberglass, air-actuated piston presses against the back of each brush. Current flows down through the brush, along the spring finger stock, and into the bus-bar. The spring finger stock is currently being replaced with thin dead soft copper fingers for the reasons described in the section on experimental results. The maximum expected current density in the brushes is 781 A/cm^2. The design current for the model is 2500 A.

A cross section of the air support system in the region of the edge of the drum is shown in Fig. 3. The conducting cylinder is slipped over a fiberglass cylinder and air is channeled down inside of the fiberglass cylinder and escapes through holes into the cavity formed between the aluminum and fiberglass cylinders, as shown in Fig. 3. The air in the cavity escapes either underneath the lower edge of the aluminum or over the upper edge. The pressure in the cavity is operated at 6.9×10^4 N/m^2 (10 psi). The cylinder axis is mounted vertically so that the escaping air provides about 17.78 N (4 lb f) of vertical force to compensate for the 0.86 kg (1.9 lb) of cylinder weight. The system is designed to allow the drums to expand radially without affecting the air support system.

The radial magnetic field for the model is a modified C-shape, dipole magnet, a cross section of which is shown in Fig. 4. The current in the two coils originally produced a dipole directly across the region in which the jaws are located. The current in the two coils was reversed and a cylindrical yoke piece and rectangular jaws with a cylindrical cutout were added. This arrangement provides a cylindrical gap in which the magnetic field is perpendicular to the surface of the center shaft. It was originally planned to operate at 1.5 T, but the nonsymmetrical field distortions were a few tenths of a tesla. The eddy currents set up in the drum would have been too high so, instead, the operating field was lowered to 1.05 T. In addition, the radial gap is a function of position around the shaft; i.e.,

$$g = 2.62 - 0.16 \cos 2\theta \tag{1}$$

where g is the radial gap in cm and θ is the angular position in degrees around the shaft with 0° measured from the shaft center along a line parallel to the face of the dipole. The resulting magnetic field, B, is approximately

$$B = 1.02 - 0.03 \cos 2\theta \tag{2}$$

where B is in tesla. The preliminary eddy current calculations indicate eddy currents should be less than 10% of the peak current density due to conduction. The magnetic field also drops by as much as 0.2 T in the axial directions measured from the center of the jaws.

These field variations present problems in operating this model which will not be encountered in an actual device where the field is generated by an azimuthally symmetric set of Helmholtz-type coils. The eddy currents generated will be such to try to eliminate the azimuthal field variations. The field given by equation (2) is only approximately correct. An error of about 10% exists for field 180° apart. This, in turn, leads to much larger torques in the model than would be present in an azimuthally symmetric excitation system.

The main current leads from the bottom bus-bar are routed back through the gap in an azimuthal symmetric array so as to create a coaxial current system. The coaxial current array produces some stability forces which help compensate for the unsymmetrical field torques. Otherwise, the air support system and central support column will have to take the load.

2 CIRCUIT DESIGN

The circuit diagram for the HOPE I facility is shown in Fig. 5. The energy storage coil has an inductance of 13.6 mH and a resistance of 2.35 mΩ. The storage coil is charged from PS1 through thyristor S1 and inductor L1. When the desired current is reached in the storage coil, thyristor S2 is gated on and the 1900 μF capacitor discharges through L1. A back bias voltage is generated across S1 and the current in the storage coil is transferred through the homopolar generator via thyristor S3.

The voltage would, in the absence of resistance, rise sinusoidally across the homopolar generator, and the current would decrease cosinusoidally. When the current goes to zero, S3 turns off and the stored energy in the rotor decays away due to friction. Another thyristor, S4, is available to conduct current in the opposite direction, if desired.

Instrumentation for HOPE I includes ordinary current voltage measuring techniques, as well as an optical tachometer and an optical system for measuring drum growth and wobble. The optical tachometer can operate to 300 000 rpm by counting reflected light pulses off a shiny surface. HOPE I has eight shiny sections arranged around the perimeter. The light pulses are brought out of the tachometer to an oscilloscope and a chart recorder. Thus, acceleration and surface velocity measurements are possible.

The other optical instrument is arranged so that collimated light sources impinge on diametrically opposite edges of the cylinder. The light which is not occluded by the cylinder illuminates photocells. Changes in the amount of light reaching the photocells can be related to drum wobble or growth.

3 PRELIMINARY RESULTS

HOPE I was first operated at the end of September. The first tests were performed with a steady current of 100 A, primarily to test the current collection system and to test out the air support system.

Without brushes and with an intercavity air pressure of 6.9×10^4 N/m^2 (10 psi), the rotor of HOPE I could reach velocities of a few hundred rpm when driven by a tangential air jet. A pressure of 6.9×10^4 N/m^2 should provide a lifting force just over the weight of the cylinder. Operation with higher intercavity pressure provided no obvious improvement or degradation in performance.

An immediate problem was discovered in the brush mechanism. Static measurements with 100 A on the brushes required almost 2.07×10^5 N/m^2 (30 psi) before uniform, low contact, potential drop was measured across the brushes. The voltage drop went from 1.2 V to 0.3 V with a pressure change of 6.9×10^4 N/m^2 (10 psi) to 2.07×10^5 N/m^2 (30 psi). After some study, it became apparent that the spring metal members which conduct the current from the brushes to the brushes were causing a sidewise thrust on the brushes, causing them to bind in the brush guides. The brushes were not riding flat on the rotating cylinder and could not easily respond to changing elevations of the rotor.

These members are currently being replaced by dead soft copper strips which are 0.0178 cm (0.007 in.) thick. The new strips produce no sidewise thrust or binding and tend to be virtually massless, allowing the brush motion to be dominated by the air pressure piston.

Before dismantling for the brush modifications, the rotor was run at a steady velocity of 3500 rpm to test the air bearing systems. No abnormal vibrations or uneven motion was observed.

The electrical circuitry was also tested by charging the storage coil up to 500 A and discharging it into HOPE I. The voltage and current waveforms are shown in Fig. 6.

4 FUTURE PLANS

The immediate objectives are to complete the brush modifications so that the original objectives of the program can be accomplished. The next step afterwards, however, is to construct and test a two-shell model so that drum-drum interactions can be studied. Plans are currently being formulated to build the drums and air-support system.

The motor cylinders for the two-drum model will be about the same size as the single drum model. They will resonate with the same storage coil.

Eventually, we would like to operate with a field excitation system more typical of what is envisioned for a full-sized CCG. We are designing a superconducting coil system with two NbTi superconducting coils of sufficient diameter to house several rotating cylinders; however, budgetary restrictions might prevent the start of construction this fiscal year.

Also in the future is a plan to operate a CCG array in the 1 to 1.5 MJ range. ANL is currently building a 1.5 MJ pulsed superconducting coil which will operate at 10 000 A. After field tests are completed on the coil, we hope to use it with a multiple drum CCG.

5 REFERENCES

1. STACEY, Weston M., Jr., et al. (March 1977), "A Revised Design for the Tokamak Experimental Power Reactor" ANL/FPP/TM-77, Argonne National Laboratory, Argonne, IL 60439, USA.

2. KUSTOM, R. L., et al, (1977) "Energy Storage and Transfer Systems for Tokamak Reactors" International Atomic Energy Agency Conference and Workshop on Fusion Reactor Design, University of Wisconsin, Madison, WI, USA.

3. KUSTOM, R. L., et al., (1975) "A Rotating Capacitor System for the Tokamak Experimental Power Reactor" Sixth Symposium on Engineering Problems of Fusion Research, IEEE Pub. No. 75CH1097-5-NPS, Sheraton Inn--Airport, San Diego, CA., November 18-21, 1975.

4. WELDON, William, University of Texas, Austin, TX, USA, private communication.

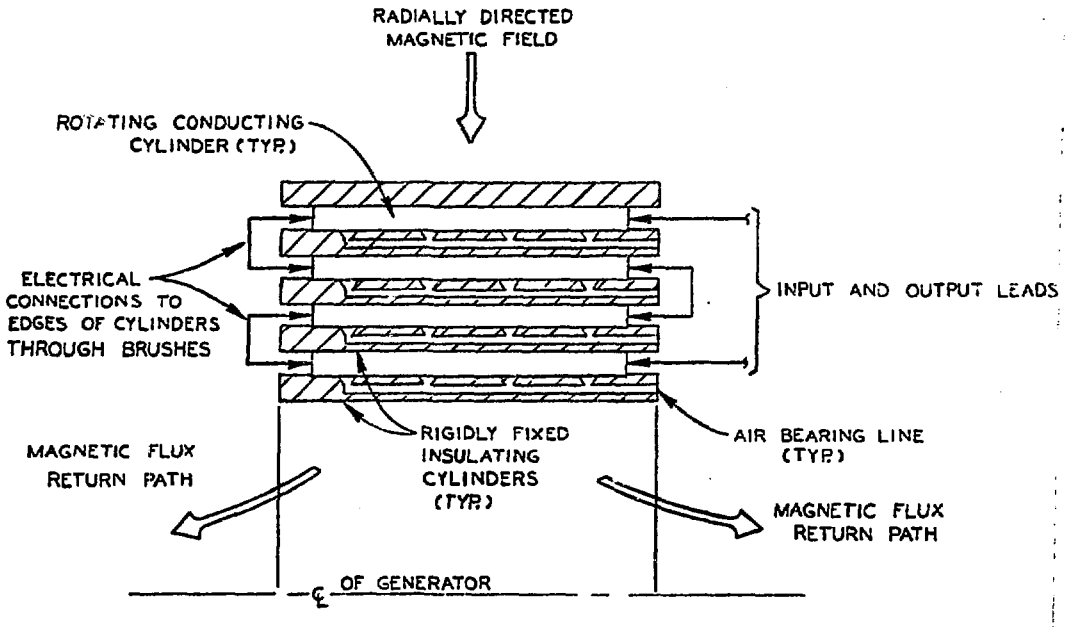

Fig. 1. Counter cyclonic generator

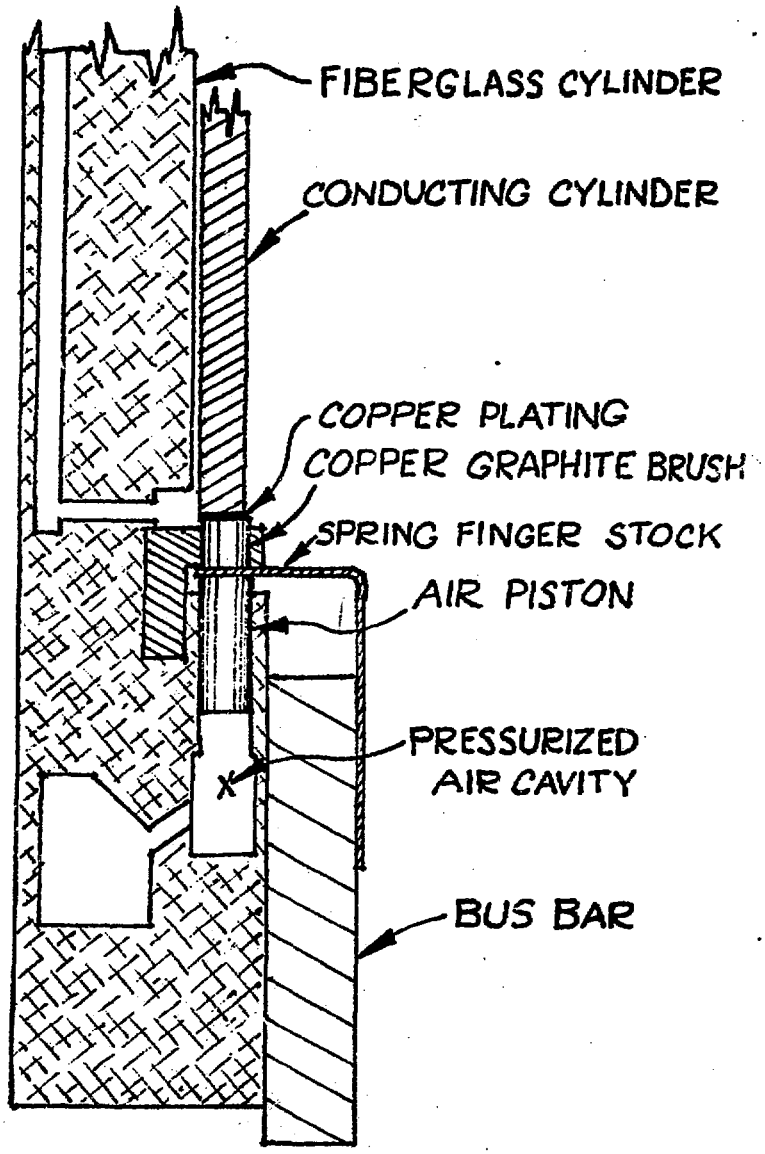

Fig. 2. Cross section of brush and air piston.

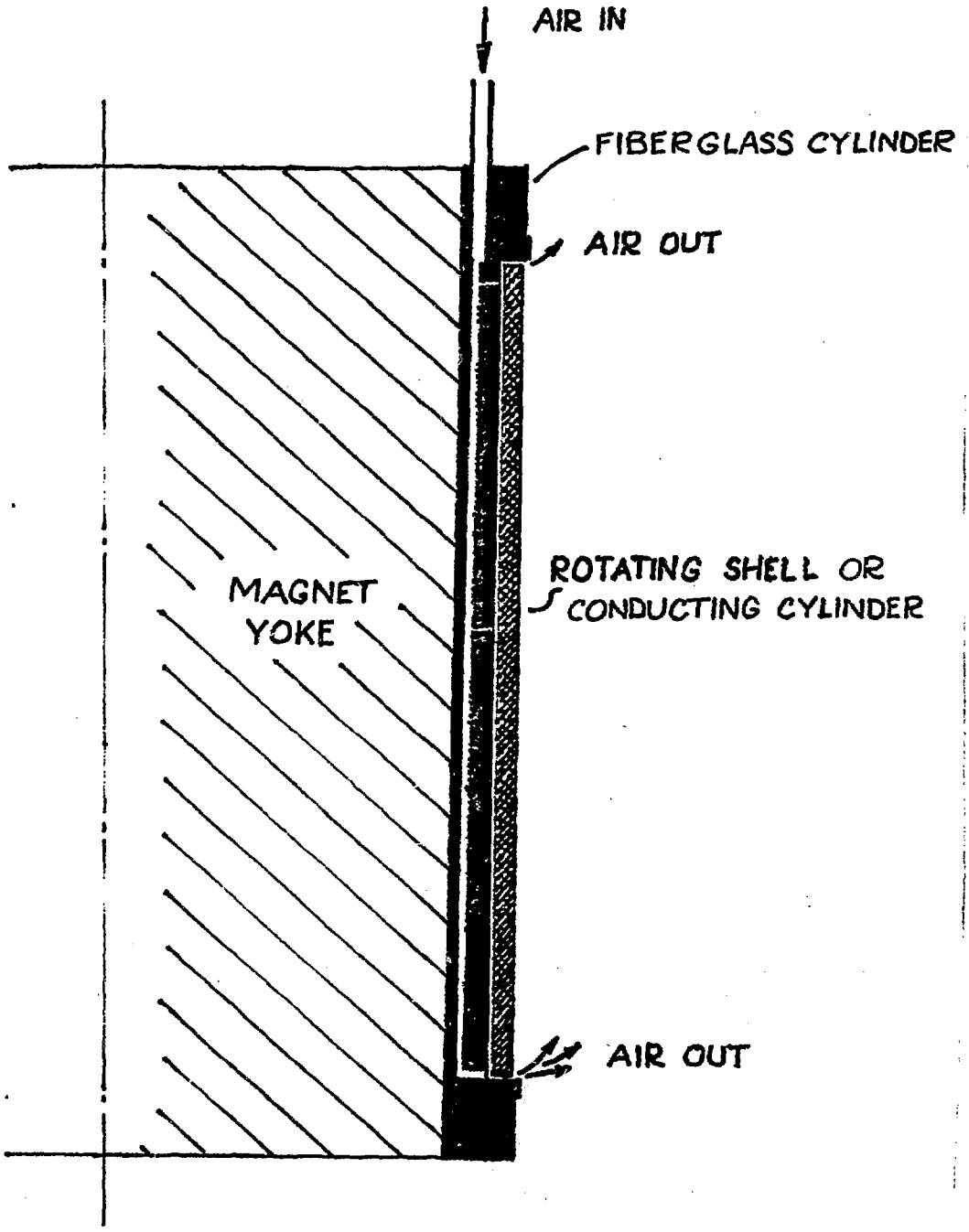

Fig. 3. Air support system.

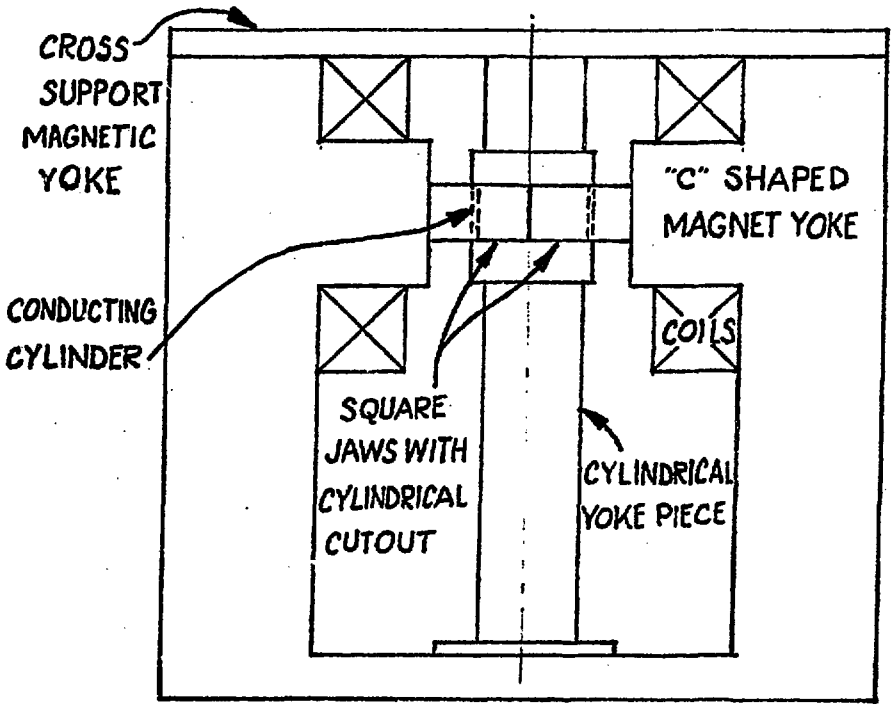

Fig. 4. Cross section of magnetic yoke for HOPE I.

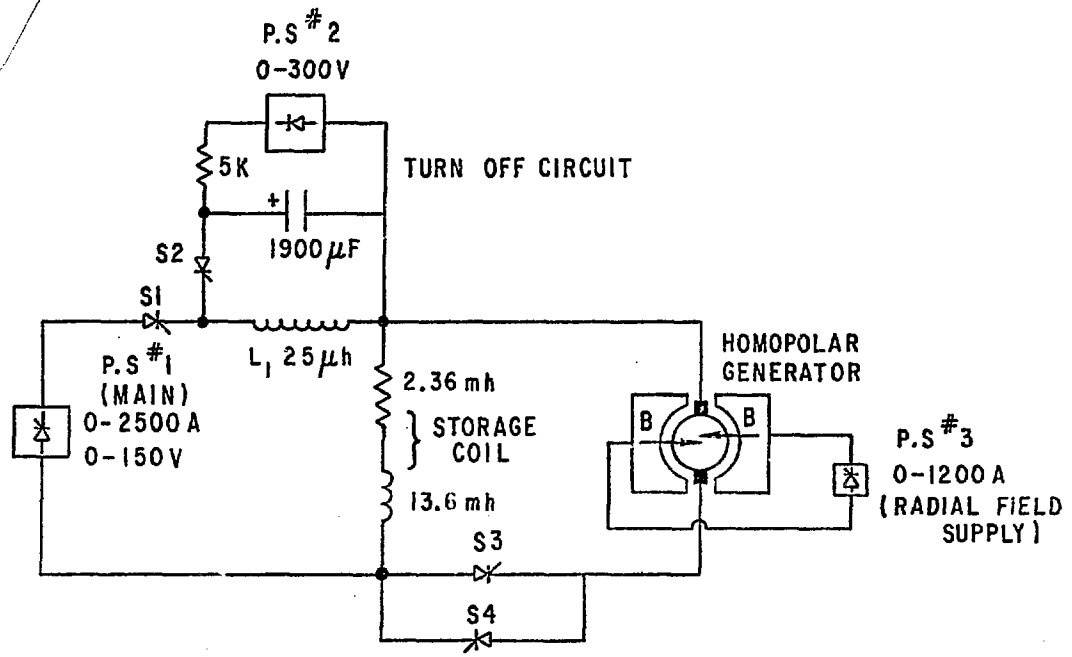

Fig. 5. Circuit diagram for HOPE I

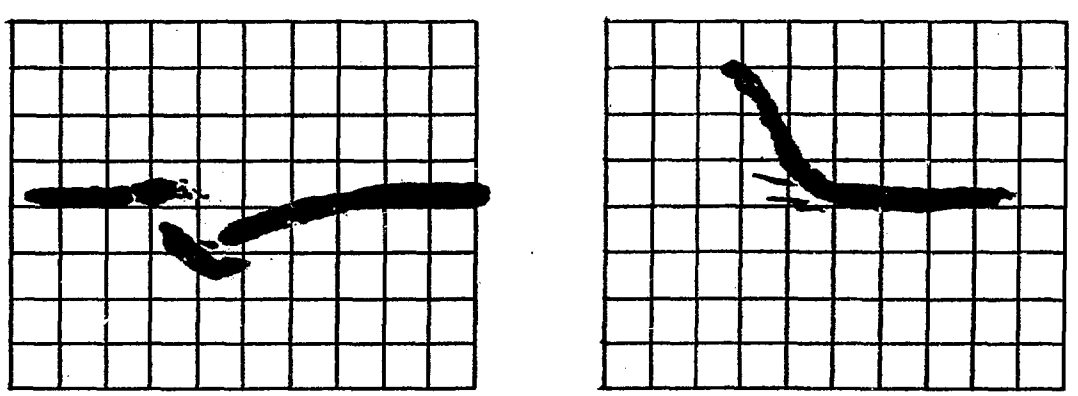

Voltage
1 V/cm 0.5 s/cm

Current
166 A/cm 0.5 s/cm

Fig. 6. Voltage and current waveforms for 500 A operation