BNL 32409
Conf-820950--7

BNL--32409

DE83 005801

50TH ANNIVERSARY OF THE DISCOVERY OF THE NEUTRON
CAMBRIDGE, ENGLAND - 13-17 SEPTEMBER 1982

DISCLAIMER

This report was prepared as an account of work sponsored by an agency of the United States Government. Neither the United States Government nor any agency thereof, nor any of their employees, makes any warranty, express or implied, or assumes any legal liability or responsibility for the accuracy, completeness, or usefulness of any information, apparatus, product, or process disclosed, or represents that its use would not infringe privately owned rights. Reference herein to any specific commercial product, process, or service by trade name, trademark, manufacturer, or otherwise, does not necessarily constitute or imply its endorsement, recommendation, or favoring by the United States Government or any agency thereof. The views and opinions of authors expressed herein do not necessarily state or reflect those of the United States Government or any agency thereof.

THE QUESTION OF BARYON CONSERVATION *

M. Goldhaber

Brookhaven National Laboratory, Associated Universities Inc., Upton, New York, U.S.A.

What has developed into the law of baryon conservation was first postulated by Herman Weyl when he talked of proton stability more than half a century ago. It was elaborated later by Stückelberg and Wigner. (For a general review see e.g., Goldhaber, Langacre and Slansky 1980 and Goldhaber and Sulak 1981.) A modern version of the law of baryon conservation might read: The net number of baryons ($\Sigma B - \Sigma \bar{B}$) does not change spontaneously or in any known interactions (inside a nucleus or in high energy collisions). For a long time it was widely believed that protons are absolutely stable, and though we have learned that a free neutron decays by beta emission with a half life of about 11 min, neutrons sufficiently strongly bound by nuclei were also considered absolutely stable. In order not to have to qualify whether we are dealing with free or bound neutrons, I shall only talk of proton stability implying tacitly that bound neutrons are included in most statements.

The above postulate is however just an ad hoc postulate. As our astronomical friends warn us: absence of evidence is not evidence of absence. It seemed therefore worthwhile to ask the experimental question: "How stable is the proton really?" A limit could be estimated from the absence of spontaneous fission of ^{232}Th. But deliberate experiments can go much further. The first of these experiments was done by Reines, Cowan and myself (Reines et al 1954). We could give limits in a very simple experiment, $>10^{21}$ years for free protons and $>10^{22}$ years for bound nucleons. Over the years, largely due to the efforts of Reines and his collaborators, the limit for bound nucleons was extended to $\sim 10^{30}$ years. Then a few years ago the grand unified theories (GUTS) were proposed in which strong, weak and electromagnetic interactions are combined, leading to the possibility that protons decay. Their lifetime is predictable in some of these theories. In particular, the simplest of the grand unified theories, SU5, predicts a lifetime for the proton of about $10^{29\pm2}$ years. Since this is at most a little longer than the previous experimental limit, it seemed feasible to devise experiments which could test these predictions. About a dozen such experiments are now in various states of completion. Some of these experiments have already preliminary data, some have just started taking data, some are being prepared, some are still in the design stage, and some are only in the planning stage.

MASTER

An experiment in the Kolar Gold Fields in India (Indian-Japanese collaboration) has now been taking data for more than a year and has obtained a number of events which are candidates for proton decay. The detector ($\sim$160 tons) consists of iron plates and proportional counters. A similar experiment in the Mont Blanc tunnel (CERN-Frascati-Milano-Turino

*Research carried out under the auspices of the U.S. Dept. of Energy.

DISTRIBUTION OF THIS DOCUMENT IS UNLIMITED

collaboration) has started working a few months ago and has observed one candidate for proton decay. There was a detailed discussion of these events at the recent International Conference on High Energy Physics at Paris where Perkins (1982) summed up the situation thus: One cannot at present be sure whether these candidates represent proton decays or neutrino induced events. It would therefore be desirable to record the neutrino background and to have, if possible, more specific signatures characteristic of proton decay. It is hoped to achieve this with water Cerenkov counters which can be easily made quite large and can detect directionality of decay particles. Two water Cerenkov counters have recently started taking data: the Harvard-Purdue-Wisconsin experiment in a silver mine in Utah, and the Irvine-Michigan-Brookhaven experiment, with which I am connected.

Here is the list of our collaborators:

Irvine-Michigan-Brookhaven Collaboration:

R.M. Bionta[2], G. Blewitt[4], C.B. Bratton[5], B.G. Cortez[2,a], S. Errede[2], G.W. Foster[2,a], W. Gajewski[1], M. Goldhaber[3], J. Greenberg[2], T.W. Jones[2,7], W.R. Kropp[1], J. Learned[6], E. Lehmann[4], J.M. LoSecco[4], P.V. Ramana Murthy[1,2,b], H.S. Park[2], F. Reines[1], J. Schultz[1], E. Shumard[2], D. Sinclair[2], D.W. Smith[1], H. Sobel[1], J.L. Stone[2], R. Svoboda[6], L.R. Sulak[2], J.C. van der Velde[2], and C. Wuest[1].

(1) The University of California at Irvine
Irvine, California 92717

(2) The University of Michigan
Ann Arbor, Michigan 48109

(3) Brookhaven National Laboratory
Upton, New York 11973

(4) California Institute of Technology
Pasadena, California 91125

(5) Cleveland State University
Cleveland, Ohio 44115

(6) The University of Hawaii
Honolulu, Hawaii 96822

(7) University College
London, U.K.

(a) Also at Harvard University

(b) Permanent address: Tata Institute of Fundamental Research, Bombay, India.

Our detector is shown schematically in fig. 1. It is filled with water and has 2,048 five-inch photo-tubes on its sides. The fiducial volume contains more than 4 ktons. It is located at a depth of ∿1600m water equivalent. We expect to identify signals characteristic of proton decay, e.g., $p \rightarrow \pi^0 + e^+$. Though the water was clear enough immediately after filling, it is being purified further and the background is being

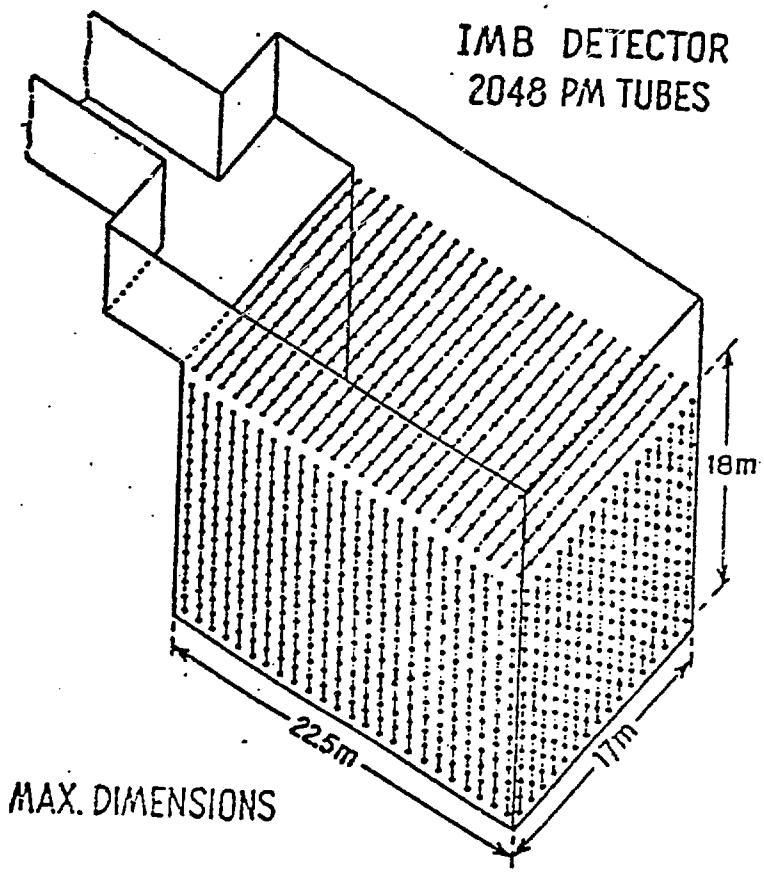

Figure 1. Schematic Drawing of IMB Detector, Situated in the Fairport Mine, Grand River, Ohio

studied. Simple events can be clearly recognised, and delayed electrons from μ-decay have been recorded, showing that our reconstruction scheme from recorded Cerenkov light to track works.

Special attention is being given to events with upward moving particles, for which the muon background is unimportant.

We have no definitive results yet, so I am not even tempted to give you what may be called "symposiogenic results".

References

Goldhaber M., Langacker P., and Slansky R. 1980 Science 210 pp 851-860
Goldhaber M. and Sulak L.R. 1981 Comments Nucl.Part Phys. 10 No. 5 pp 215-225
Marciano W. 1982, Proc. of the Int. Conf. on High Energy Physics (to be published)
Perkins D. 1982, Proc. of the Int. Conf. on High Energy Physics (to be published)
Reines F., Cowan Jr. C.L., and Goldhaber M. 1954 Phys. Rev. 96 pp 1157-8.