Response of a $Nb/Al_2O_3/Nb$ Tunnel Junction to Picosecond Electrical Pulses

C. Karadi, S. Verghese, C. A. Mears, J. O. Orenstein, and P. L. Richards

Department of Physics, University of California and
Materials Sciences Division, Lawrence Berkeley Laboratory,
Berkeley, CA 94720.

A. T. Barfknecht

Conductus Inc., Sunnyvale CA 94086.

LBL--32901-Rev.

DE93 010416

This work was supported in part by the Director, Office of Energy Research, Office of Basic Energy Sciences, Materials Sciences Division of the U.S. Department of Energy under Contract No. DE-AC03-76SF00098.

MASTER

DISTRIBUTION OF THIS DOCUMENT IS UNLIMITED

Abstract

We have resolved the time domain response of the quasiparticle current in a superconducting tunnel junction to picosecond electrical pulses propagating in free space.

Introduction

The quasiparticle tunneling current in superconductor-insulator-superconductor (SIS) junctions has been exploited in a class of ultrasensitive high-frequency devices such as mixers and detectors [1]. Nevertheless, the nonlinear, and even linear, response of these junctions has not been adequately measured. While SIS junctions have been characterized using cw sources near 80GHz [2], the broadband response near the threshold at $2\Delta - eV_{bias}$ has not been studied. (Here Δ is the superconducting gap parameter and V_{bias} is the voltage across the junction) In this work, we have used picosecond electrical pulses to measure the broadband quasiparticle response of a Nb trilayer SIS junction in both the linear and nonlinear regimes. The use of electrical pulses is especially well suited to the nonlinear regime, in that a relatively large instantaneous voltage may be applied while the average power is kept low.

Experimental Technique

The picosecond electrical pulses used for this measurement were generated by illuminating a silicon photoconducting switch at the feed of a 300 μm dipole antenna [3]. The silicon was implanted with $1.0\times10^{15}/cm^2$ oxygen ions at both 100 keV and 200 keV. The antenna terminals have a 5μm gap which was biased as low as 10V for linear spectroscopy and up to 60V for the nonlinear measurements. To excite the photoconductor we used an unamplified Ti-Sapphire laser operating at 800nm with 100 fs pulses and an average power of 50 mW. The use of a high repetition rate (100MHz) laser is critical to obtain the high ratio of signal to noise in our data. The emitted electrical pulses are nearly a single cycle with a center frequency at approximately 180 GHz and a 3db bandwidth of 80 GHz.

The broadband response of the SIS device is inferred by measuring the dc current induced by interfering two electrical pulses at the junction, as a function of the time delay, τ, between them. Figure 1 is a schematic diagram of the interferometer that was used to perfom these measurements [4]. The pulses are generated from two separate antennas. The beam from each antenna is partially collimated by a 13mm diameter sapphire hyperhemisphere and then further collimated by a 3.5 inch diameter f/1 parabolic mirror. The two beams are combined into one with a 200μm thick mylar beamsplitter. To focus the recombined beam onto the SIS junction an f/3 parabolic mirror first directs the pulses onto the polypropylene window of a 4.2K cryostat which houses the junction. The beam which enters through the window is then focused onto the SIS junction with a TPX lens and a quartz hyperhemisphere.

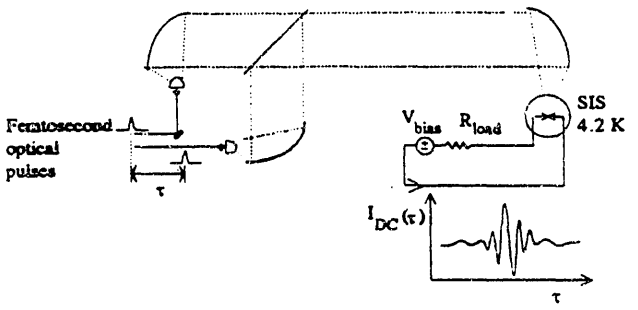

Figure 1. Schematic layout of the picosecond electrical pulse interferometer.

The SIS junction was fabricated at the terminals of a log-periodic planar antenna, which couples the free space electrical pulses to the junction. The SIS junction is a 2μm x 2μm $Nb/Al_2O_3/Nb$ trilayer with a critical current density of 3.5 kA/cm^2 , capacitance of 200 fF, and normal state resistance of 14 Ω. A magnetic field of about 100 gauss cancels the Cooper pair tunneling current and allows us to isolate the quasiparticle tunneling current.

Results

The SIS junction can be modeled as a superposition of voltage tunable two level systems [5]. The BCS theory [6] predicts that a junction biased at V_{bias}, will have strong resonant absorption when $hf_0 = 2\Delta - eV_{bias}$. As in atomic or semiconductor systems, the width of the resonance is due to lifetime effects as well as inhomogeneous broadening (distribution of energy gap values along the SIS junction.) According to the theory developed by Tucker, the response of the SIS junction to an arbitrary voltage pulse in the time domain can be calculated from the measured dc I-V characteristic [6]. The broadening of the resonance is expected to be manifest in the width of the current onset at $2\Delta/e$ in the current-voltage (I-V) characteristic. In response to a voltage pulse, the current is expected to oscillate near the frequency $(2\Delta - eV_{bias}) / h$ and to decay with a lifetime related to the broadening of the dc I-V curve. For our SIS junction, $2\Delta = 2.75$ meV and the width of the threshold in the dc I-V curve corresponds to a decay time of 10 ps.

Figure 2 shows the signal generated by two electrical pulses incident on the junction as a function of the time delay between them, for $V_{bias} = 2.3$ mV. The bias voltage on the antennas was adjusted so that the pulse intensity was the same in both arms of the interferometer. The laser excitation of one of the antennas was chopped at 1 kHz. Low noise electronics are necessary for measuring the linear quasiparticle response to small electrical pulses. The signal was coupled through a 300K transformer to a low noise FET amplifier with a spot noise referred to the SIS junction of $0.2nV/\sqrt{Hz}$ at 1 KHz.

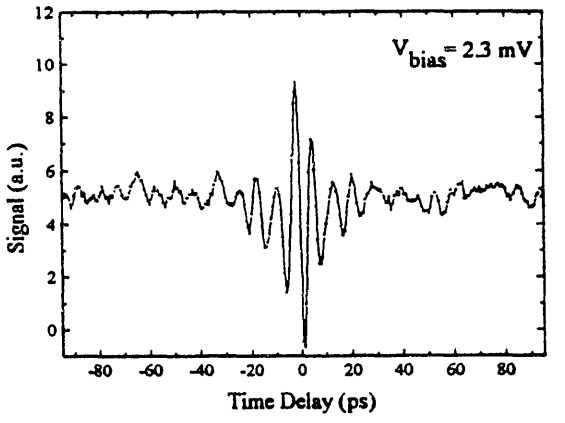

Figure 2. One photon cross-correlation in the SIS junction at $V_{bias} = 2.3$ mV.

At $V_{bias} = 2.3$ mV the SIS junction has a strong absorption at 110 GHz which is within the bandwidth of our driving pulse. The peak pulse intensity was kept low so that the SIS junction responded linearly. The coherent oscillation of the quasiparticle current shown in Fig. 2a decays in 10 ps and is consistent with the broadening of the dc I-V curve and correlation time of the incident pulses. In future experiments we plan to use both faster pulses and devices which ring with a longer decay time.

Figure 3 shows the result of a measurement similar to Fig. 2, except that $V_{bias} = 1.3$ mV. Two absorption mechanisms contribute to the response of the SIS junction for this value of $(2\Delta - eV_{bias}) / h$. Either one 350 GHz photon or two 175 GHz photons can be absorbed. We expect the two-photon absorption will dominate since the 350 GHz component of the electrical pulse measured with a bolometer was negligible. Signatures of a two-photon absorption process which appear in Fig. 3 are the rectification of the interference pattern and the peak to off-peak ratio of 8:1 [7]. Also, the response of the junction to a single electrical pulse scales as the electric field amplitude to the fourth power, as is expected for a two photon process.

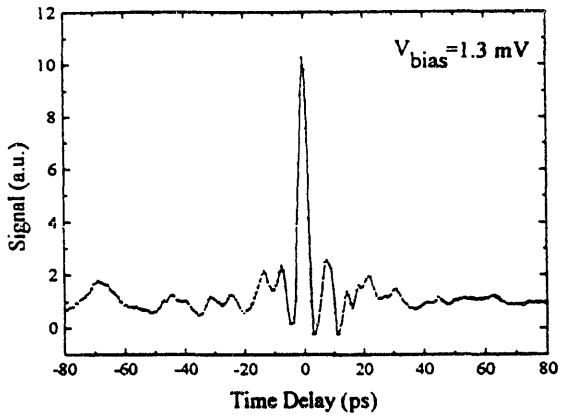

Figure 3. Two photon cross-correlation in the SIS junction at V_{bias} = 1.3 mV.

In conclusion, we have applied the technique of picosecond electrical pulse generation to study the time-domain response of a SIS tunnel junction in the linear and nonlinear regimes. The successful measurement of the two-photon absorption process in an SIS junction demonstrates the application of picosecond electrical pulses to time-resolved non-linear spectroscopy. Future experiments will include other nonlinear techniques, such as spectral hole burning, which may allow us to probe the mechanism which broadens the dc I-V curve of the SIS junction.

Acknowledgments

This work is supported by U.S. DOE under contract DE-AC03-76SF00098.

References

[1] P. L. Richards and Q. Hu, Proc. IEEE 60, 1233, (1989).

[2] Q. Hu, C. A. Mears, P. L. Richards and F. L. Lloyd, Phys. Rev. Lett. 64, 2945 (1990); A. H. Worsham, N. G. Ugras, D. Winkler, D. E. Prober, N. R. Erickson, P. F. Goldsmith, Phys. Rev. Lett. 67, 3034 (1991).

[3] M. van Exter, D. Grischkowsky, IEEE Trans. MTT 38, 1684 (1990).

[4] S.E. Ralph, D. Grischkowsky, App. Phys. Lett. 60, 1070 (1992); B.I.Greene, J.F. Federici, D.R. Dykaar, R.R. Jones, P.H. Bucksbaum, App. Phys. Lett 59, 893 (1991).

[5] Q. Hu, C.A. Mears, P.L. Richards, F.L. Lloyd, Phys. Rev. B 42, 10250 (1990).

[6] J. R. Tucker, M.J. Feldman, Rev. Mod. Phys. 57, 1055 (1985).

[7] J.-C. M. Diels, J. J. Fontaine, I. C. McMichael, F. Simoni, Applied Optics 24, 1270 (1985).

END

DATE FILMED

5/28/93