CONF-831203--174

DE85 000952

By acceptance of this article, the publisher or recipient acknowledges the U.S. Government's right to retain a nonexclusive, royalty-free license in and to any copyright covering the article.

CONF-831203--174

NOTICE
PORTIONS OF THIS REPORT ARE ILLEGIBL
It has been reproduced from the be
available copy to permit the broad
possible availability.

ASSEMBLY AND INSTALLATION OF A PAIR OF SUPERCONDUCTING BUSES FOR THE LARGE COIL TEST FACILITY*

J. W. Moore
Union Carbide Corporation-Nuclear Division
P.O. Box X, Bldg. 1000
Oak Ridge, TN 37830

Abstract: The Large Coil Test Facility in Oak Ridge, Tennessee was built to test six large tokamak-type superconducting coils. The test facility is designed to test these coils in an environment which simulates that of a tokamak. Current is supplied to the coil through the high current leads in the Superconducting Bus Assembly. Two of these assemblies interface with each test coil inside the test facility vacuum vessel and with the vapor-cooled lead assemblies outside the vacuum vessel. Since the high current leads are required to be superconducting, the Bus Assembly is designed to be filled with liquid helium for cooling. Under some test conditions, there is relative motion between the coil interface and the vacuum vessel interface. The Bus Assemblies are designed to accommodate this motion plus thermal conditions. This paper provides a detailed review of the design, fabrication, assembly, and installation of a typical bus pair (see Fig. 1).

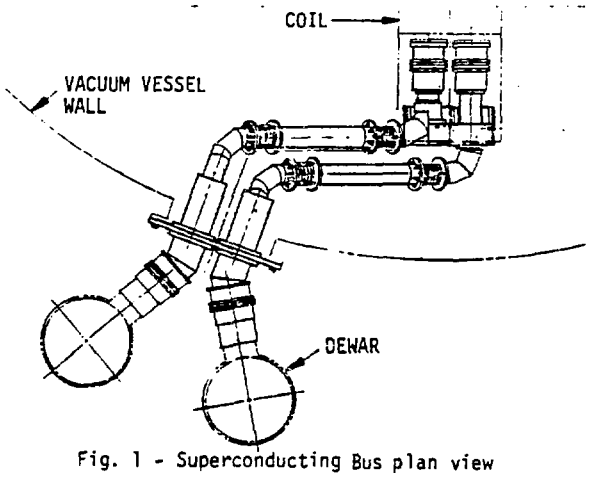

Fig. 1 - Superconducting Bus plan view

Introduction

Due to the high current carrying capacity required (see Design Requirements) the buses are superconducting. Therefore, the conductor is cooled by liquid helium. Each bus has its own liquid helium dewar. These dewars are located outside the vacuum vessel and serve as a feedthrough for the power supply to the bus.

The buses are designed with bellows to accommodate displacement of the coil relative to the vacuum vessel. These displacements occur because of two factors: (1) cooldown from room temperature to 4.2 K and (2) pulse coil operation. Pulse coils are used to simulate transient magnetic fields and thereby impart large displacement forces on the coils.

*Research sponsored by the Office of Fusion Energy, U.S. Department of Energy, under Contract No. W-7405-eng-26 with the Union Carbide Corporation.

The six coils are secured to a large support pos which is located off-center in the vessel. Because c this, each of the twelve buses is dimensionally unique. Special adjustable fixturing was used to facilitate assembly of each bus using the same procedures and methods for all buses.

Design Requirements

The bus is basically a copper conductor inside a stainless steel pipe, and the complexity of the design, fabrication, assembly and installation is not inherently obvious. The criteria that had to be met were extensive and can be divided into two basic categories: (1) electrical and (2) mechanical.

Electrical

The major electrical requirements and specifications for each superconducting bus are:

Operating voltage - 0.8 to 2.5 kV
Operating amperage - 11 to 25 kA

MASTER

Primary conductor
- Material - copper, OFHC
- Size - 1.27 cm x 10.16 cm (1/2 in. x 4 in.)

Superconductor
- Material - niobium titanium
- Size - 0.14 cm x 0.28 cm (0.555 in. x 0.110 in.)
- No. required - 10

- Material - niobium tin
- Size - 0.10 cm x 0.20 cm (0.039 in. x 0.079 in.)
- No. required - 5

The bus conductor assembly (includes superconductor) is electrically insulated from the stainless steel pipe surrounding it by using fiberglass epoxy laminate spacers and supports and by wrapping its entire length with insulating tape.

Mechanical

The major mechanical requirements and specifications are:

Coil displacement
- Thermal shrinkage
  - Vertical - 2.54 cm (1 in.)
  - Radial - 1.27 cm (1/2 in.)
- Pulse coil induced
  - Radial - 3.18 cm (1-1/4 in.)

Magnetic loads (2-T field max)
- Helium containment - $F_{x,y,z} = \pm 2250$ kg max (5000 lb.)
  $M_{x,y,z} = \pm 1100$ kg-m max (100,000 lb.-
- Conductor - $F_{x,y,z} = \pm 700$ kg max (1500 lb.)
  $M_{x,y,z} = \pm 110$ kg-m max (10,000 lb.-in

Internal pressure - Vacuum to 7 atm

Materials
- Helium containment - 304L stainless steel

DISTRIBUTION OF THIS DOCUMENT IS UNLIMITED

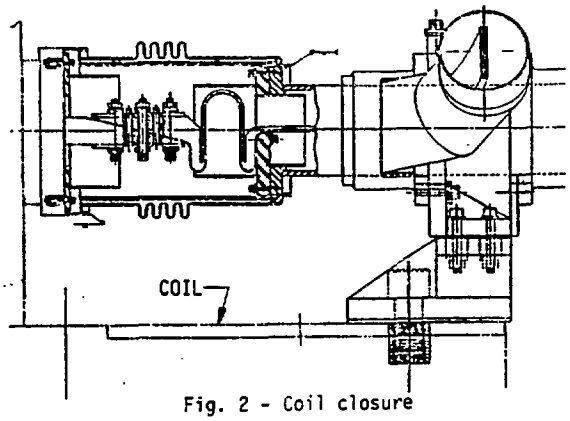

Fig. 2 - Coil closure

Basic Design

In addition to the design requirements listed above, there are many other requirements that had to be met by the design. Some of the more important ones are listed here.

1. The design had to provide containment for liquid helium, which dictated a welded system, but had to allow reasonable access to the bolted electrical joints at the coil and the dewar (see Figs. 2 and 3).

2. The portion of the bus that extends through the vacuum vessel wall and connects to the dewar had to be thermally protected to reduce heat gain from the room temperature surroundings (see Fig. 3).

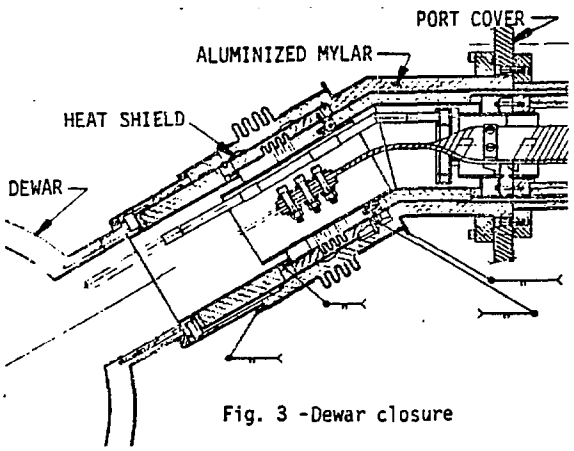

Fig. 3 -Dewar closure

3. The bolted conductor joints at the coil and the dewar had to be designed to maintain joint pressure to ensure a low resistance (see Figs. 2 and 3).

4. A flexible section of bus was required at the coil end to allow for differential growth between the conductor and the coil (see Fig. 2).

Assembly

No two of the twelve bus assemblies required are dimensionally identical. An assembly fixture was designed and built that could be adjusted to accommodate each different bus. Each bus was partially assembled before being placed into the fixture. The fixture's primary purpose was to correctly align the component parts of the assembly for welding. The following is the general order of assembly (see Fig. 4).:

1. The component parts of the copper conductor are welded together, and the superconductors are soldered into place.

2. The "U" bend and the two twists are made, and kapton and glass/epoxy tapes and G-10 supports and spacers are added.

3. A special flanged pipe is installed, the 90° bend made, and the copper insulated to next bend (70°); a 90° elbow is slid on; and G-10 spacers are added.

4. The partially assembled bus is placed into the assembly fixture which has been previously set up to receive that particular bus.

5. A pipe-bellows-turnbuckle assembly is slid on, the 70° bend made, and insulation applied up to the next bend.

6. A second bellows-turnbuckle assembly, a 70° elbow, and other miscellaneous items are installed.

7. The assembly is then completely welded in the fixture. The last bend is made, the rest of the bus taped, and the last section of helium containment (6 in. pipe) and a copper radiation shield are welded into place. Several layers of aluminized Mylar insulation are added at the vessel end during final assembly to minimize heat gain during operation.

Each bus is assembled in much the same way. Included in each assembly are instrumentation wires that run from the coil end to the dewar end. These wires will be used to monitor coil-to-bus joint voltage drop and temperature.

Each assembly is then cold shocked with liquid nitrogen and pressure and vacuum leak tested.

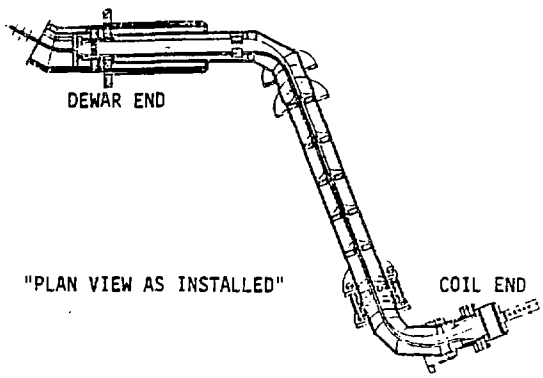

Fig. 4 - Superconducting Bus section

Installation

Prior to initiating bus installation, an interfacing fixture is bolted to the appropriate vessel port. This fixture is used in positioning the buses with respect to the port and for a template by which the actual port cover is machined.

Each bus is installed separately following the procedure below (see Figs. 1, 2, and 3):

1. The bus with necessary coil closure hardware is lowered into the vessel, aligned to the coil connection point, and bolted to the coil. The conductor attachment is not made until later (see Step 5).

2. The location of the bus exiting the port flange opening is then determined and the bus reconfigured to allow for thermal shrinkage of the coil. This puts the bus in an essentially free state when the system is cooled. The two bellows-turnbuckle assemblies are used to reconfigure the bus.

3. The second bus is then fitted as above and the vessel port mounting flanges for both buses are cut to length and welded in place. Aluminized Mylar insulation is added prior to installing the mounting flanges.

4. The interface fixture is removed and the port cover machined to match. The port cover is then bolted to the vessel port flange and the buses (via mounting flanges) bolted to it. O-rings are used for vacuum sealing.

5. The coil closure (Fig. 2) is now completed by: (a) bolting the bus conductor lug and the coil conductor lug together using stainless steel bolts and spring washers (with indium foil used between the two lugs to increase joint efficiency); (b) bolting the G-10 insulator to coil; (c) making instrumentation connections; and (d) welding the closure bellows assembly into place. Repeat for each bus.

The dewar closure is very complex and includes the following steps.

6. The dewar with all necessary hardware is moved into position and aligned with the bus. The inner-bellows flange and the outer-bellows flange are aligned and welded.

7. The bus lug is now bolted to the dewar lug as above, instrument wires connected, and a G-10 insulator bolted in place around the joint. The inner bellows is then welded in place completing the helium containment from the coil to the dewar. A vacuum helium leak check is then made to check all welds, new and old.

8. Aluminized Mylar is then wrapped around the helium containment and a nitrogen-traced heat shield soldered in position. The heat shield is used to reduce heat gain from the room temperature surroundings. The heat shield tubing is then vacuum helium leak tested and flow tested.

9. Aluminized Mylar is now wrapped around the heat shield and the outer bellows welded in place to the outer bellows flange and to the dewar completing the vacuum jacket around the helium containment (reduces heat gain). A vacuum helium leak test is then performed on all welds relative to the vacuum jacket.

10. Installation is completed by adjusting the turnbuckles on the bellows-turnbuckle assemblies to allow the bus to follow coil movement.

DISCLAIMER

This report was prepared as an account of work sponsored by an agency of the United States Government. Neither the United States Government nor any agency thereof, nor any of their employees, makes any warranty, express or implied, or assumes any legal liability or responsibility for the accuracy, completeness, or usefulness of any information, apparatus, product, or process disclosed, or represents that its use would not infringe privately owned rights. Reference herein to any specific commercial product, process, or service by trade name, trademark, manufacturer, or otherwise does not necessarily constitute or imply its endorsement, recommendation, or favoring by the United States Government or any agency thereof. The views and opinions of authors expressed herein do not necessarily state or reflect those of the United States Government or any agency thereof.