BNL 30031

August 26, 1981

MASTER

Plans for Brookhaven Fastbus During the next $\pi \times 10^{16}$ Nanoseconds

L.B. Leipuner, R. Larsen, D. Makowiecki, W. Morse, T. Rudolf,
W. Sims, S. Blatt, M. Campbell, H. Kasha and M.P. Schmidt

DISCLAIMER

This book was prepared as an account of work sponsored by an agency of the United States Government. Neither the United States Government nor any agency thereof, nor any of their employees, makes any warranty, express or implied, or assumes any legal liability or responsibility for the accuracy, completeness, or usefulness of any information, apparatus, product, or process disclosed, or represents that its use would not infringe privately owned rights. Reference herein to any specific commercial product, process, or service by trade name, trademark, manufacturer, or otherwise, does not necessarily constitute or imply its endorsement, recommendation, or favoring by the United States Government or any agency thereof. The views and opinions of authors expressed herein do not necessarily state or reflect those of the United States Government or any agency thereof.

The submitted manuscript has been authored under contract DE-AC02-76CH00016 with the U.S. Department of Energy. Accordingly, the U.S. Government retains a nonexclusive, royalty-free license to publish or reproduce the published form of this contribution, or allow others to do so, for U.S. Government purposes.

DISTRIBUTION OF THIS DOCUMENT IS UNLIMITED

PLANS FOR BROOKHAVEN FASTBUS DURING THE NEXT $\pi \times 10^{16}$ NANOSECONDS

L.B. Leipuner, R. Larsen, D. Makowiecki,
W. Morse, T. Rudolf and W. Sims
Brookhaven National Laboratory, Upton, New York 11973

S. Blatt, H. Campbell, H. Kasha and M. Schmidt
Yale University, New Haven, Connecticut 06520

ABSTRACT

During this period new modules and devices will be built to be used in Experiment 749 at the A.G.S. Included will be ~200 channels of A-D converters for Pb-Glass Cerenkov counters, 2000 channels of proportional wire chamber readout, cable segments, segment interconnects, a new unibus interface, and a new on-segment processor. These items and perhaps others will be ready by the end of 1981.

For those of you who don't already know and care to know

$$\pi \times 10^{16} \text{ nanoseconds} = .996 \text{ year.}$$

The work I will describe here is Brookhaven-Yale Fastbus. It has been used for about a year now at the AGS at Brookhaven to do all the data gathering for Experiment 735, a sensitive test of time reversal invariance in the decay $K^+ \rightarrow \mu^+ + \pi^0 + \nu$. In this experiment we measure the direction of polarization of the μ^+ meson. Any component at all of this polarization out of the decay plane is an indication of time reversal invariance violation. The experiment will be completed this week, after running for about 1200 hours during the last year. We have processed over 20 million events through Fastbus and after the usual infant mortality failures the electronics has been remarkably stable.

We will describe the electronics and system in some detail, but we first address the question in part, "why should we build a fastbus?" We heard yesterday of a CAMAC system that will produce a truck-load of tapes a day. Fastbus was designed to be at least an order of magnitude faster. We don't need 10 truck-loads of tape per day. Perhaps some insight into this problem can be gained from my suggestion for the title for the next meeting in this series

"Topical Conference on Computerized Data Rejection in Particle and Nuclear Physics."

If we are going to be able to afford to process the data we can get from our accelerators, we must reject the un-interesting events early in the data train. Indeed, if we are not going to lose all the good events in the dead-time generated by bad or uninteresting events we must reject the bad ones early. This is one of the major reasons for the development of Fastbus.

Enough of the generalities for now. For Experiment 735 we developed not only a system, with water cooled crates and the mechanics of conduction cooled modules, but, of course, the electronics of the modules themselves. To sum it up briefly, we developed the following devices:

1. Latch — 32 channel/modules with 3 nanosecond coincidence and veto.
2. TDC — 32 channels, each 6 bits wide with 0.1 μsec resolution for timing μ decays.
3. MEM Look up — Used by CONTROLLER to determine azimuthal segment of stopped μ's. Uses FPLA's, since most of the memory would be filled with zeros.
4. CONTROLLER — Reads data (Latches and TDC). Examines data and either aborts or proceeds to accept data. Encodes bits and stores data. Based on 10801 sequencer chip and is micro-programmed.
5. MEMORY — 30 nsec 4K × 16 or 2K × 32 bits FIFO, FILO, or RANDOM ACCESS.
6. SCALER — 2 versions, one commercial with 16ch × 32 bits, one home built 16ch × 28 bits.
7. PRE-DET — synchronize with AGS.
8. INTERFACE — FASTBUS ⟷ UNIBUS (PDP11)
   MAPS address (8 REG) (16 bit unibus to 32 bit fastbus)
   HANDLES INTERRUPTS
   HANDLES BROADCASTS
   DOES BUS ARBITRATION (FASTBUS)
   DOES 8, 16 or 32 BIT transfers

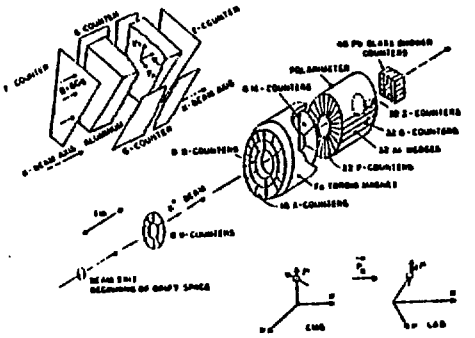

Figure 1

The apparatus contained over 200 scintillation counters. Figure 1 is a schematic of the apparatus. K^+ mesons enter from the lower left and decay in the region on either side of the V counters. Only the mode of decay $K^+ \mu^+ + \pi^0 + \nu$ is of interest to this experiment. The μ^+ meson from the decay is bent by the toroidal focusing magnet into the polarimeter. Here the muon comes to rest in an aluminum wedge and has its spin processed by an axial magnetic field. The μ^+ decays with a lifetime of 2.197×10^{-6} sec into a positron and 2 neutrinos. The positron is detected in one of the 32 pairs of counters inserted between the aluminum wedges. The field is reversed on each pulse of the AGS. The π^0 decays almost immediately into 2 gamma rays. The lead glass array at the end of the apparatus identifies at least one of these gammas.

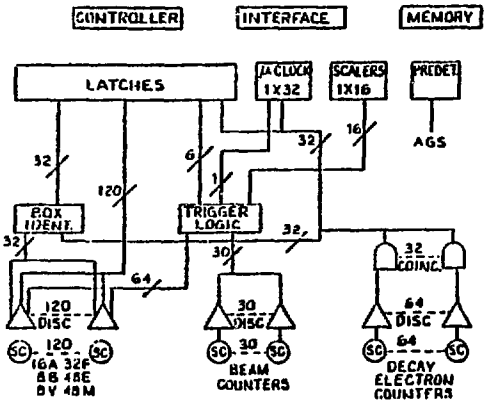

Figure 2

Figure 2 shows the counters, discriminators and the rest of the electronics and their interconnections. The latches record all the counters hit at the time of the trigger. The 32 μ-clocks are started then. If a positron is detected by a counter pair embedded in the polarimeter, the clock associated with that section is stopped. A set of scalers record summary information for each acceleration pulse such as beam intensity and various trigger configuration hits.

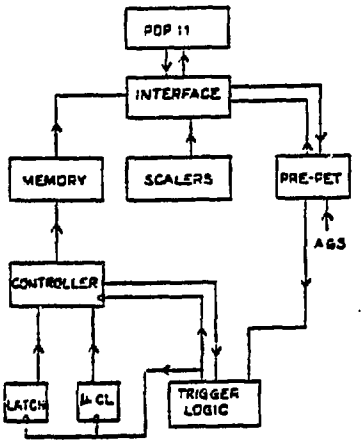

Figure 3

Figure 3 shows the data flow for the experiment. The trigger logic causes the μ clocks to start and the latches to latch. The controller reads the latches and then determines if the event is good. If it isn't, the event is aborted. If the event is good the controller determines which clocks are to be read and encodes both the latch and clock data and records them in memory. The PDP11 takes an event at a time from memory and processes them at its own pace. The pre-det synchronizes the PDP11 and trigger logic with the accelerator. The trigger is disabled between spills and the PDP11 reads the scalers when it finishes processing the data after a pulse.

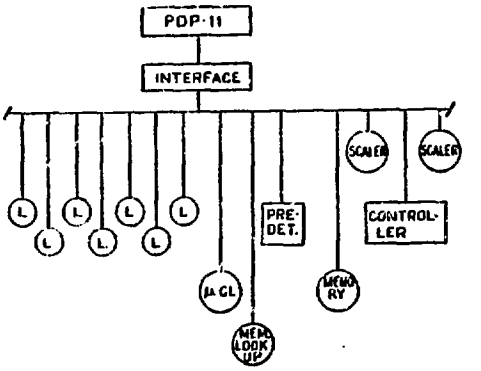

Figure 4

The same equipment as viewed from Fastbus is shown in Fig. 4. The system is a single segment system with the "Host Interface" performing those functions which would normally be done by the Segment Interconnect in our system. These include bus arbitration and broadcasts.

During the coming winter we will have a multi-segment system in operation for our new experiment, E749. Crates will be interconnected with cable segments. These are segments which obey the same protocol as the crate segments but are not restricted to crates. Units (modules) are interconnected on these segments by cables rather than with a backplane. Figure 5 shows a possible configuration for the new system. We will require ADC's for 240 channels of PB glass and a 2000 chamber, wire-chamber readout system as well as our current latches, memory, pre-det, and scaler system. We will probably build a new Host Interface with a cable segment between the Fastbus crate part and the Unibus part. A set of new processors will be built with RAM for program storage and with an ALU. These will then become truly computers.

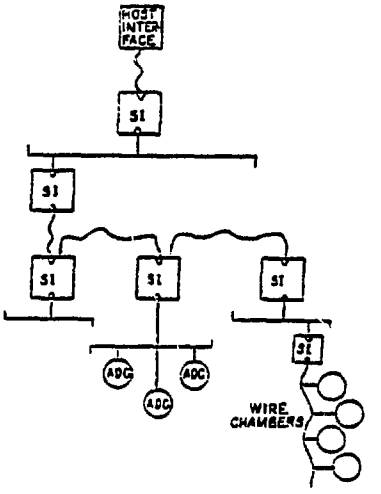

Figure 5

Debugging is always a problem. Our new system with its several segments, both crate and cable, will have available several debugging modules. We already have a static test stand for preliminary testing of modules. We also have software that works through the Host Interface for dynamic testing of the system. We will build a module with an 8085 μ-processor in it that will plug into the bus and allow both static and dynamic line by line tests of the bus and modules. This same module will also perform protocols to write, read, etc., modules from a terminal.

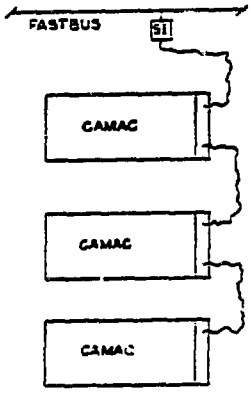

Figure 6

A Fastbus to CAMAC interface is planned. This CAMAC module will plug into the controller slots and connect externally with a Fastbus cable segment. This is shown schematically in Fig. 6. To fully address a CAMAC crate requires 5N lines, 4A lines, and 5F lines for a total of 14 Fastbus address bits. This would allow $2^{32-14} = 2^{18} = 128$ thousand CAMAC crates in the system.

I would return to general arguments now. Any standard to be useful must serve a large number of needs. The utility of a standard can often be increased by making it more complex. If the increased costs, both tangible and intangible, of the increased complexity is not outweighed by the increased utility, the complexity should not be added. We believe that the Brookhaven-Yale system has gone as far as the standard should go. There is no limit to the complexity that the user can incorporate in his explicit system nor should there be. However, to impose a narrow need upon all users of a system does no service to the community. The value of a standard is measured not by how many cute ideas are incorporated into it, but rather by what the value per cost is. A good standard knows when to stop.