MASTER

By acceptance of this article, the publisher or recipient acknowledges the U.S. Government's right to retain a nonexclusive, royalty-free license in and to any copyright covering the article.

78-239

conf 790125--25

THE EFFECTS OF IRRADIATION ON THE NORMAL METAL OF A COMPOSITE SUPERCONDUCTOR: A COMPARISON OF COPPER AND ALUMINUM*

C. E. KLABUNDE, R. R. COLTMAN, JR., AND J. M. WILLIAMS

Solid State Division, Oak Ridge National Laboratory, Oak Ridge, Tennessee 37830, USA

The most economical design of a superconducting magnet for a fusion reactor will depend sensitively on the irradiation-induced changes in magnetoresistance which can be expected during its life.

This report presents new data on damage production for aluminum that were obtained in neutron irradiation experiments at 4 K. These data are combined with previously obtained results on

NOTICE
This report was prepared as an account of work sponsored by the United States Government. Neither the United States nor the United States Department of Energy, nor any of their employees, nor any of their contractors, subcontractors, or their employees, makes any warranty, express or implied, or assumes any legal liability or responsibility for the accuracy, completeness or usefulness of any information, apparatus, product or process disclosed, or represents that its use would not infringe privately owned rights.

saturation effects and magnetoresistivity to yield a projection of total resistivity vs neutron dose (expressed in displacements per atom) for aluminum in service at < 10 K in a magnetic field. The results are compared closely with those obtained previously for copper, using the same method of analysis.

1. INTRODUCTION

In the design of a practical magnetic fusion energy device, one of the host of parameters to be considered is the effect of radiation damage on the electrical conductivity of the normal metal used as the stabilizer in the superconducting magnets. The amount of stabilizer necessary to provide safe operation at the end of a magnet's lifetime will depend strongly on the degradation of conductivity with damage. An earlier report[1] brought together experimental data and theoretical calculations on dam-

* Research sponsored by Division of Materials Science, U.S. Dept. of Energy under contract W-7405-eng-26 with Union Carbide Corporation.

age resistivity production and magnetoresistivity in copper to develop an analytical method for predicting total resistivities to be expected in high magnetic fields as a function of neutron exposure. Here we extend this method to the other major stabilizer candidate, aluminum, and make comparisons between the two. Also, some additional aspects of radiation damage in the magnet environment are discussed.

In the earlier report it was pointed out that, where a wide variety of different neutron energy spectra prevail, an appropriate way to quantify neutron exposure is not in terms of fluence but rather in terms of the spectrum's atom-displacing capability, "dpa" (displacements per atom) as calculated from the spectrum and nuclear data by some computer code such as 'RECOIL'.[2] Santoro et al.[3,4] have done this for copper and aluminum in their neutronics cal-

culations for an ORNL Tokamak reference design.[5]

2. SUMMARY OF THE CALCULATIONAL METHOD AND THE RESULTS FOR COPPER

Available data on fast-neutron damage production in Cu in zero magnetic field[7] were expressed as

$$\rho_D(0) = s[1 - \exp(-iD/s)] + \rho_o(0) \qquad (1)$$

where D is the neutron dose in dpa, s is the saturation value of the damage resistivity, and i is the initial rate of resistivity increase vs D. The values for Cu were: $s \simeq 4.0$ nΩ•m, and $i = 649$ nΩ•m/dpa.

The magnetoresistance, while not measured in damaged Cu at the very high fields of concern here (11 T), was shown to lie within a suitably broad envelope of Kohler plot curves expected to encompass the present application. The envelope was described by two lines of the form

$$\rho_D(H) = \rho_D(0) + 10^{\alpha} H^{\beta} \rho_D(0)^{1-\beta} \qquad (2)$$

where α & β are intercepts and slopes of a pair of straight lines on the Kohler plot, with H, the field in Tesla, and ρ, the resistivity in nΩ•m. The values were: $\alpha_1 = -1.25$, $\beta_1 = 0.95$; $\alpha_2 = -1.77$, $\beta_2 = 1.23$.

Substituting the zero-field resistivity given by Eq. (1) into Eq. (2) then gives a family of curves of total resistivity vs dose, initial resistivity, and magnetic field. Three-dimensional plots of these were generated, and the one for a fixed H of 10T and various $\rho_0(0)$ is reproduced here as Fig. 1.

3. APPLICATION OF THE METHOD TO ALUMINUM

For Al the same data sources on damage production are used now as were used for Cu. For the saturation resistivity, the work of Nakagawa et al.[6] gives values ranging from 8.70 to 9.55

nΩ•m (depending on the order of polynomial fit to the rate vs Δρ data). As before with Cu, we choose a compromise value, slightly larger than they found, for a linear fit: s ≈ 9.0 nΩ•m; and from the ORNL[7] fission neutron initial damage rate work we get i = 1520 nΩ•m/dpa.

For the magnetoresistivity of damaged Al, we turn to data of Böning et al.,[8] who studied reactor neutron damage at 4.6 K in an Al foil with an initial resistivity of 0.012 nΩ•m (after size-effect correction). Their study extended to a damage resistivity of 3.1 nΩ.m measured in transverse fields up to 3T, and also included various stages of anneal subsequent to the irradiation. Their Kohler curves are reproduced in Fig. 2a, where the heavy curve includes all of

the damage production data* and the others are measured after various stages of anneal. Unlike Cu, the Al curves show a strong bend-over to saturation at high $H/\rho(0)$, no deviation from Kohler's Rule during damage production, and only a modest deviation for any and all of the partially annealed states. All of these Al data are for a single sample. We do not know whether a variety of samples would lead to a broader band of Kohler curves, as was the case with Cu. Since recovery of damage in Al is virtually complete at room temperature, these curves should be valid for successive irradiations after such anneals.

As with Cu, we take an empirical approach to describe the range of magnetoresistivity values to be found in the damaged material, and we construct two curves of the form:

$y = a + b \log [1 - 1/(1 + z)]$; $z = 10^{(cx + d)}$

where $y = \log [(\rho_D(H) - \rho_D(0))/\rho_D(0)]$ and $x = \log [H/\rho_D(0)]$. As indicated in Fig. 2b, separate fits were made to the damage production data (curve A) and the annealing data (curve B). Fitting was done by trial-and-error computer plotting on top of the data curves and judged by eye. The resulting relation in terms of H and ρ is

$$\rho_D(H) = \rho_D(0) + \rho_D(0) \cdot 10^a [1 - 1/(1 + z)]^b; \quad z = 10^d [H/\rho_D(0)]^c \qquad (3)$$

*Another of their figures showed essentially no deviation of data points from this curve.

with parameter values:	a	b	c	d
A (as-damaged)	0.17	1.73	1.1	-0.7
B (partially annealed)	0.34	1.77	1.1	-0.9

The fits as seen in Fig. 2b seem quite adequate for utilizing the magnetoresistivity data in the present calculational method.

4. THE RESULTS FOR ALUMINUM AND A COMPARISON WITH COPPER

Using the parameters above and Eqs. (1) and (3), Fig. 3 was generated for Al showing equivalent results to those for Cu in Fig. 1. Similarly, Table I presents resistivity values for a service time of one year at Santoro et al.'s position 4 for two cases, one with a penetration that is being considered for the neutral beam injector, and the other without the penetration. Position 4 is on the plasma side

of the winding next to the shield. Resistivity values corresponding to the as-damaged magnetoresistance curve are given for three representative starting materials. For comparison, the Ref.-1 values for Cu are also shown.

Table I. Projected Resistivities at "Position 4" in a Tokamak for Cu and Al.

Starting Material $\rho_o(0)$ nΩ·m	Total Resistivities $\rho_D(11T)$ nΩ.m					
	Unirrad.		1 yr, no penetration		1 yr with penetration	
	Cu	Al	Cu	Al	Cu	Al
0.03	0.62	0.07	0.89	2.26	3.92	8.25
0.10	0.62	0.23	0.95	2.34	3.99	8.31
0.30	0.78	0.65	1.14	2.56	4.19	8.50

Since both the initial damage rate and the saturation damage resistivity values of Al are about 2.3 times those for Cu, and with the Kohler

curve lying above that for Cu in all of the mid-range resistivity values, it might appear that Al is clearly a poorer candidate than Cu for a stabilizer material. However, there is a region in the table and the curves for low initial resistivity and low damage resistivity values in which Al is better. This region is examined in detail in Fig. 4, where we use neutron fluence (of fission spectrum neutrons*) instead of dpa to compare Cu and Al under the same conditions. We see that, because of the larger initial magnetoresistivity in Cu, Al is in fact better up to a fluence of about 1×10^{21} n/m^2, provided it has an initial resistivity less than ~ 0.1 nΩ•m. This fluence translates to dpa values of 1.2 and 1.5×10^{-4} for Cu and Al, respectively. These dpa values are found to

occur in one year about halfway out through the toroidal field (TF) coils according to Ref. 3. However, in considering positions other than the innermost winding, we must also take into account the decrease in magnetic field (approximately linearly) with radial position. ($H \rightarrow 0$ at some point near the outer winding.) As a result, we find that nowhere is Al better than Cu in this design. Only at much lower doses than those projected in the high-field region would there be any location where Al would be better, assuming that is, that the high purity required is feasible.

* With fission-spectrum neutrons: D/fluence is
for Cu: 1.176×10^{-25} dpa·m²/n, and
for Al: 1.465×10^{-25}.

5. SUMMARY

From the foregoing analysis it appears that Cu is the stabilizer material of choice, and due to its high initial magnetoresistivity, ultra-high purity is not important. Nevertheless, as our earlier report cites,[1] and as Table I also indicates, Cu is not so superior as to preclude the need for design compromises which take radiation damage to the stabilizer into account. Such compromises may entail "tradeoffs" between additional shielding and additional stabilizer material, especially in "hot spot" regions which result from penetrations.

6. OTHER CONSIDERATIONS

When the overall design has progressed to the point of incorporating a realistic consideration of the damage resistivity characteristics of the magnet stabilizer, then it may be desirable to

further refine the accuracy of the damage treatment by including other more subtle details of the damage behavior. One of these is the neutron energy spectrum dependence of both the saturation, s, and the initial production rate, i. A neutron energy spectrum can be characterized by the median value of the primary recoil energies imparted to the irradiated material. Using this concept, Averback et al.[9] and others have shown for the initial production rate, and Birtcher et al.[10] for the saturation resistivity that these quantities are greatest for the lowest recoil energies and fall to somewhat lower values for high energies where damage is in large multidefect cascades. These decreases with increasing recoil energy seem to level off

when the cascade size reaches a point where breakup into subcascades is thought to occur. Up to now, the types of fast neutron spectra that have been accessible for damage studies seem to be in the 'level' region as far as the initial production rate is concerned. Saturation measurements are not yet extensive enough to verify this leveling effect there.

The significance of these spectral dependencies for magnetic fusion devices lies in the fact that, while the neutrons in the device originate with an energy far up in the 'level' region, after extensive shielding those which reach the TF coils are greatly moderated, constituting a spectrum considerably softer than any neutron spectrum yet used in radiation damage studies. The exact spectrum of primary

recoil energies for the TF coils has not been explicitly calculated yet. If it had a median energy of 3 keV (which is ∿ 1/10th that used in most fast neutron damage studies), then, judging from the Averback and Birtcher results, the initial damage rates in Cu could be up ∿ 60% over the rate used here and the saturation resistivity could be up ∿ 20%.

Another point to be considered is how the damage production proceeds on the second and succeeding damage/anneal cycles. Birtcher et al.,[11] studying only the first two cycles of a saturation concentration using fission-fragment damage from 0.1% U^{235} doping, suggest that the initial damage rate and the <u>total</u> saturated resistivity (new cycle plus previous unrecovered residue) are both approximately constant with cycling. A 15% residue is seen after 330 K anneal. Sanger et al.,[12] studying low concen-

trations (3% of saturation) using 400 GeV proton damage, find that the unrecovered resistivity residue depends on the total low temperature damage resistivity as a combination of linear and square-root terms. A 16% residue is seen after a 298 K anneal of the 1st cycle, dropping to 9% on the 4th cycle. These studies give a fair picture of what can be expected, but data obtained with realistic neutron spectra and appropriate damage concentrations, along with magnetoresistance measurements, would help elucidate the correct parameters for the Tokamak.

REFERENCES

[1] J. M. Williams, C. E. Klabunde, R. R. Coltman, Jr., and R. L. Chaplin, IEEE Transactions on Magnetics, in press - Jan. 1979.

[2] T. A. Gabriel, J. D. Ambrosey, and N. M.

Greene, ORNL/TM-5160, Oak Ridge National Laboratory (1976).

[3] R. T. Santoro, V. C. Baker, and J. M. Barnes, Nucl. Tech. 37, 274 (1978).

[4] R. T. Santoro, J. S. Tang, R. G. Alsmiller, Jr., and J. M. Barnes, Nucl. Tech. 37, 65 (1978).

[5] M. Roberts and E. S. Bettis, ORNL/TM-5042, Oak Ridge National Laboratory (1975).

[6] M. Nakagawa, K. Böning, P. Rosner, and G. Vogl, Phys. Rev. B 16, 5285 (1977).

[7] C. E. Klabunde, R. R. Coltman, Jr., J. M. Williams, and J. K. Redman, to be published.

[8] K. Böning, H. J. Fenzl, E. Olympios, J. M. Wetter, and H. Wenzl, Phys. Stat. Sol. 34, 395 (1969).

[9] R. S. Averback, R. Benedek, and K. L. Merkle, J. Nucl. Mat. 75, 162 (1978).

[10] R. C. Birtcher, R. S. Averback, and T. H. Blewitt, J. Nucl. Mat. 75, 167 (1978).

[11] R. C. Birtcher, T. H. Blewitt, B. S. Brown, and T. L. Scott, "Fundamental Aspects of Radiation Damage in Metals," Conference, Gatlinburg, Tennessee, October 1975. USERDA Report CONF-751006-P1, p. 138 (Springfield, Virginia: NTIS).

[12] P. A. Sanger, B. P. Strauss, R. W. Boom, and G. L. Kulchinski, IEEE Transactions on Magnetics, MAG-13, No. 1, 852 (1977).

Figure Captions

Fig. 1. - COPIED from Ref. 1 - for Copper. $\rho_D(H)$ vs D for H = 10T at several $\rho_o(0)$. (Equivalent SI units on resistivity scales: $\rho_D(H)$: 0 to 6 nΩ•m, $\rho_o(0)$: 0.01 to 1.00 nΩ•m.)

Fig. 2. - COPIED from Ref. 8 - Kohler magnetoresistivity curves for neutron-damaged Aluminum. (a) Solid curve is all as-damaged data; others are for various stages of recovery. (b) Same as (a) plus computer-drawn trace of axes and fitted curves: 'A' to as-damaged, 'B' to approximate the others. (Equivalent SI units for log[H/ρ(0), (T/nΩ•m)]: -1 to +2.)

Fig. 3. - $\rho_D(H)$ vs dpa for H = 10T at several $\rho_o(H)$.

Fig. 4. - Comparison of Al and Cu at low fluences. $\rho_D(H)$ vs ϕt for H = 10T at several $\rho_o(0)$. See text for conversion to 'equivalent' dpa.

Fig. 1

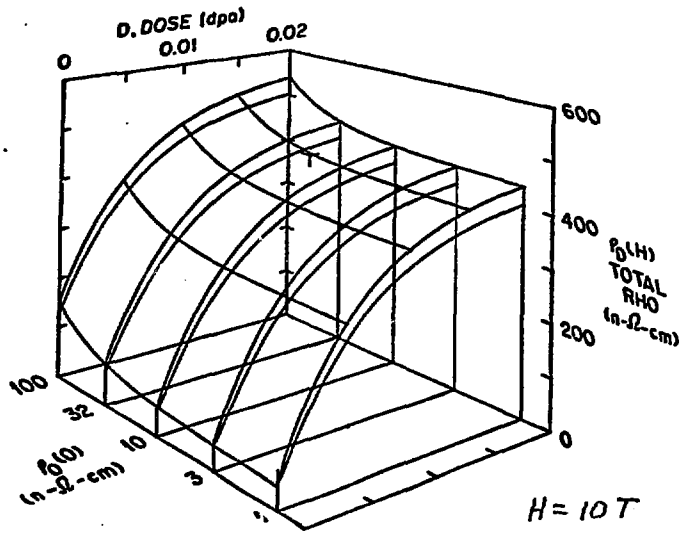
D. DOSE (dpa)
0
0.01
0.02
600
400
200
0
$\rho_D(H)$
TOTAL
RHO
(n-Ω-cm)
100
32
10
3
$\rho_D(0)$
(n-Ω-cm)
H = 10 T

Fig. 2

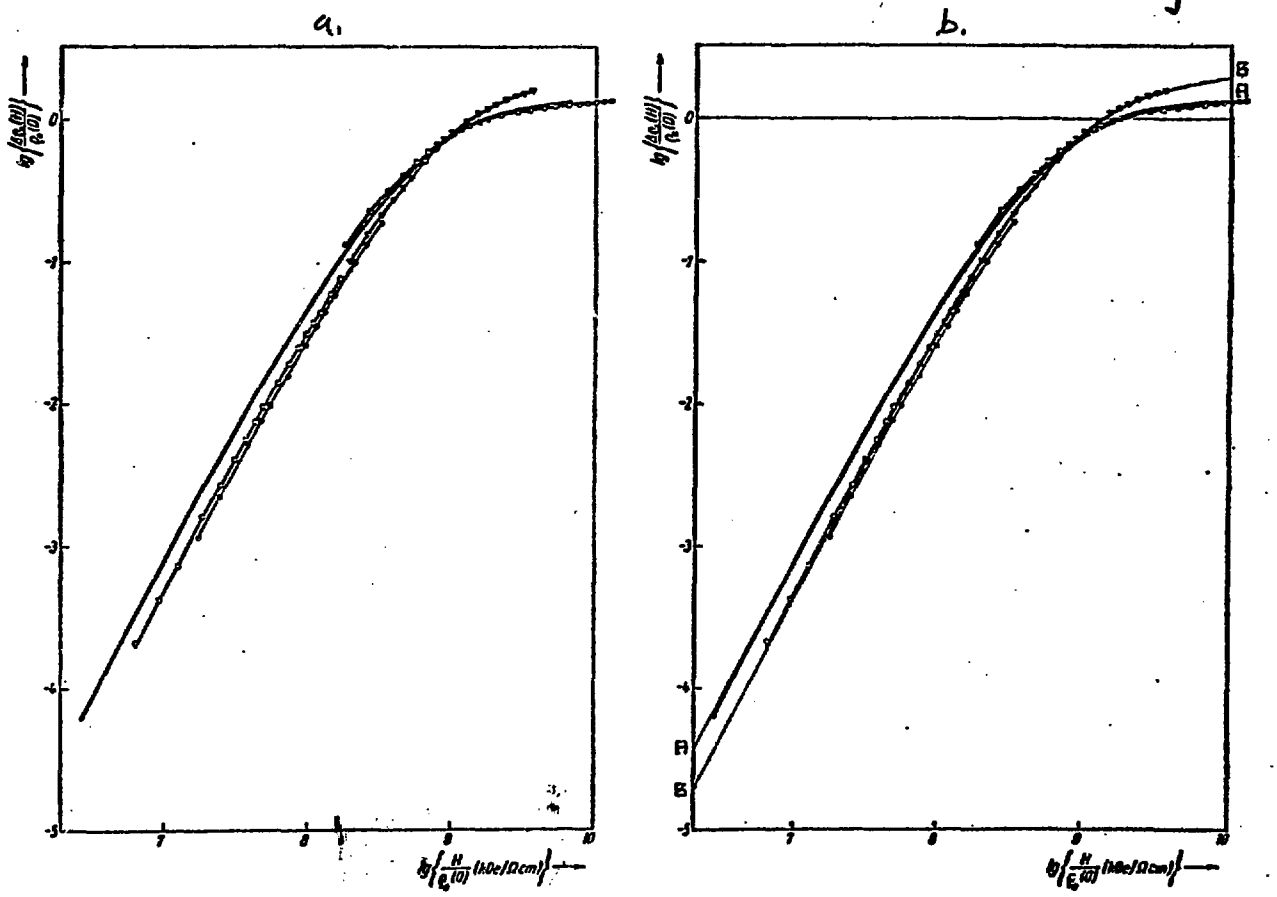
a.
b.
B
A
A
B

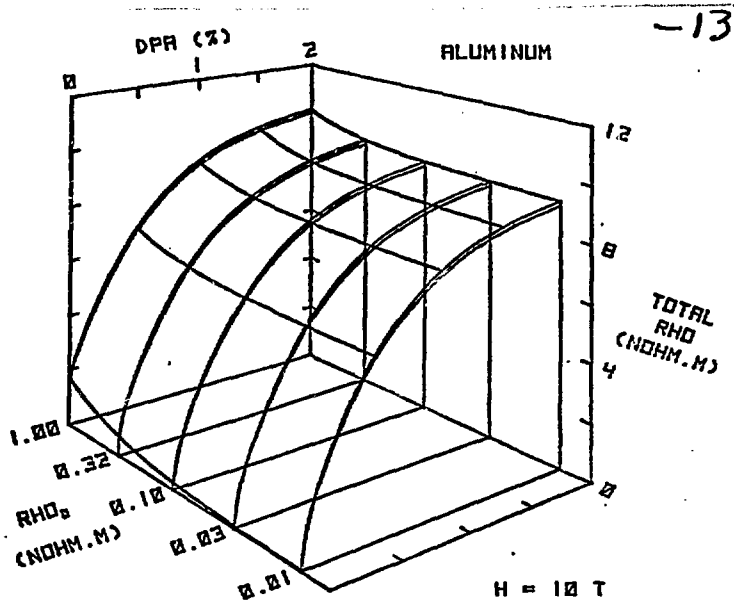

Fig. 3.

{ axis labelling being re-done by Graphic Arts
$\rho_0(0)$ & $\rho_0(H)$ $(n\Omega \cdot m)$ }
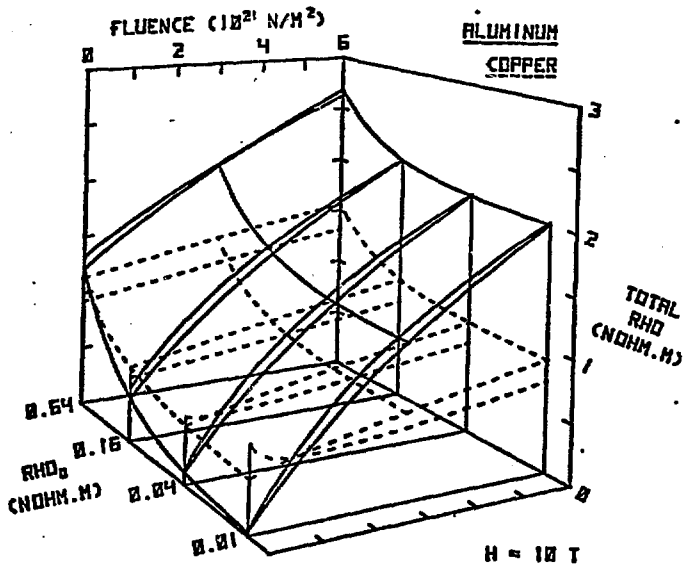
Fig. 4