470
1-18-84 ES (1)

I-12843 DR# 2050-8

SANDIA REPORT

SAND83-0130 • Unlimited Release • UC-66c
Printed November 1983

Program for the Improvement of Downhole Drilling Motors

DO NOT MICROFILM COVER

John T. Finger

Prepared by
Sandia National Laboratories
Albuquerque, New Mexico 87185 and Livermore, California 94550
for the United States Department of Energy
under Contract DE-AC04-76DP00789

SF 2900-Q(6-82)

DISTRIBUTION OF THIS DOCUMENT IS UNLIMITED

DO NOT MICROFILM
COVER

Issued by Sandia National Laboratories, operated for the United States Department of Energy by Sandia Corporation.

NOTICE: This report was prepared as an account of work sponsored by an agency of the United States Government. Neither the United States Government nor any agency thereof, nor any of their employees, nor any of their contractors, subcontractors, or their employees, makes any warranty, express or implied, or assumes any legal liability or responsibility for the accuracy, completeness, or usefulness of any information, apparatus, product, or process disclosed, or represents that its use would not infringe privately owned rights. Reference herein to any specific commercial product, process, or service by trade name, trademark, manufacturer, or otherwise, does not necessarily constitute or imply its endorsement, recommendation, or favoring by the United States Government, any agency thereof or any of their contractors or subcontractors. The views and opinions expressed herein do not necessarily state or reflect those of the United States Government, any agency thereof or any of their contractors or subcontractors.

Printed in the United States of America
Available from
National Technical Information Service
U.S. Department of Commerce
5285 Port Royal Road
Springfield, VA 22161

NTIS price codes
Printed copy: A03
Microfiche copy: A01

DISCLAIMER

This report was prepared as an account of work sponsored by an agency of the United States Government. Neither the United States Government nor any agency Thereof, nor any of their employees, makes any warranty, express or implied, or assumes any legal liability or responsibility for the accuracy, completeness, or usefulness of any information, apparatus, product, or process disclosed, or represents that its use would not infringe privately owned rights. Reference herein to any specific commercial product, process, or service by trade name, trademark, manufacturer, or otherwise does not necessarily constitute or imply its endorsement, recommendation, or favoring by the United States Government or any agency thereof. The views and opinions of authors expressed herein do not necessarily state or reflect those of the United States Government or any agency thereof.

DISCLAIMER

Portions of this document may be illegible in electronic image products. Images are produced from the best available original document.

PROGRAM FOR THE IMPROVEMENT OF DOWNHOLE DRILLING MOTORS

SAND--83-0130

DE84 005063

SAND 83-0130

John T. Finger

GEOTHERMAL TECHNOLOGY
DEVELOPMENT DIVISION 6241

ABSTRACT

THIS REPORT DESCRIBES THE WORK DONE UNDER CONTRACT TO SANDIA NATIONAL LABS AND TO THE DEPARTMENT OF ENERGY FOR IMPROVEMENT OF DOWNHOLE DRILLING MOTORS. THE FOCUS OF THIS PROGRAM WAS THE DEVELOPMENT OF A BETTER BEARING-AND-SEAL ASSEMBLY THAT COULD BE USED IN DIFFERENT KINDS OF DRILLING MOTORS IN A GEOTHERMAL ENVIRONMENT. MAJOR TASKS WERE: (1) DESIGN AND CONSTRUCTION OF SEAL TESTING DEVICES, (2) SCREENING AND EVALUATION OF CANDIDATE SEALS IN A SIMULATED BEARING/SEAL PACKAGE, (3) TESTS OF THE MOST PROMISING CANDIDATES IN A FULL-SCALE BEARING/SEAL PACKAGE, AND (4) ANALYSIS OF FAILED SEALS AFTER TESTING. THE KEY RESULTS FROM THIS PROGRAM WERE: (1) IDENTIFICATION OF SEAL/SHAFT/LUBRICANT SYSTEMS THAT PERFORMED WELL AT HIGH PRESSURE AND TEMPERATURE, (2) IDENTIFICATION OF OTHER SEAL DESIGNS THAT SHOULD BE AVOIDED FOR SIMILAR APPLICATIONS, AND (3) EVALUATION OF THE TEST MACHINES' DESIGN.

DISTRIBUTION OF THIS DOCUMENT IS UNLIMITED

TABLE OF CONTENTS

		Page
	Abstract	3
I	Introduction	7
II	Approach	9
III	Hardware Design	11
IV	Early Seal Tests in the STM	26
V	Graphite-Based Seals	34
VI	Redundant Seals	38
VII	Tests of Commercial Bearing/Seal Packs	39
VIII	Tests of New Seal Types in the STM	42
IX	Contract to Failure Analysis Associates	46
X	Concluding Tests in the STM (1981)	50
XI	Full-Scale Tests in the Bearing/Seal Package Test Facility	55
XII	Conclusions and Hindsight	61
Appendix A -	Summary of Tests in the Seal Test Machine	66
Appendix B -	Summary of Tests in the Bearing/Seal Package	71
Appendix C -	Lubricant Test Results	73

LIST OF FIGURES

		Page
Figure 1	- Turbodrill Assembly	10
Figure 2	- Mud-Lubricated Bearing System for a Typical Downhole Motor	13
Figure 3	- Seal Test Machine	16
Figure 4	- Thermocouple Locations in STM	17
Figure 5	- STM Drive System	18
Figure 6	- Bearing/Seal Package Test Facility (BTF)	21
Figure 7	- High-Temperature Lubricant Tester	25
Figure 8	- Chevron Packing Seal	28
Figure 9	- 125K-RD 181 Seal	30
Figure 10	- Johns-Mansville UNEEPAC Seals	31
Figure 11	- Canted Lip Seal	33
Figure 12a	- Cross Section of Graphite-Metal Matrix Seal Pack	34
Figure 12b	- Cross Section of Grafoil-BeCu Seal Pack with Flexing Lip Backup System	35
Figure 13	- Flexing Leaf Zero-Clearance Backup System	37
Figure 14	- Variseal Diagram	43
Figure 15	- Formation of Grafoil Seal on Mandrel	44
Figure 16	- HTCR Seal	45
Figure 17	- Variseal Failure Modes	48
Figure 18	- Variseal Design Improvements	49
Figure 19	- Seal Arrangement in the STM	52
Figure 20	- Second Generation Variseal	54
Figure 21a	- UTEX Double Lip Floating Piston	56
Figure 21b	- UTEX Single Lip Floating Piston	56
Figure 22	- Variseal Floating Piston	57
Figure 23	- Schematic of Mechanical Face Seal	59

I. INTRODUCTION AND BACKGROUND

In 1976 ERDA began support for a program to improve downhole drilling motors that has continued for more than six years. Since budgetary and philosophical guidelines concluded this program at the end of FY'82, it is an appropriate time to summarize the work that has been done.

The original motivation for this work rested on the advantages of downhole motors (DHM):

-- accurate directional drilling

-- more power delivered to the bit than with rotary

-- reduced casing wear

-- higher speeds available

and on the performance of DHM at that time (typical lifetimes under 40 hours because of bearing failure). The objective, then, was to design an improved motor that would be long lived and would allow high bit ΔP while operating at high temperature and pressure. Since the bearing section is the most vulnerable part of the DHM assembly and since turbine design would not change significantly to meet the objective, the program became focused on the development of an improved bearing section that could be used on any type of drilling motor.

Thrust loads on the bearing section are the result of an inequality between the hydraulic downthrust from the motor and the upthrust of the bit load. Prevalent practice in DHM bearing design at that time was to use either rubber thrust pads or metal rolling bearings--but to have them "lubricated" by the abrasive-laden drilling fluid. Rubber thrust pads generated high torques if the up and down loads were very different, and the effort to balance these loads often meant drilling with a poor com-

bination of bit weight and hydraulics. Metal bearings could take higher thrust loads but wore quickly in the drilling mud environment. The criteria for improvements in the proposed new bearing package were derived from the shortcomings of existing tools and from requirements imposed by geothermal drilling. Other requirements such as load capacity, physical size, and rotary speed were assumed to be the same as for conventional tools. The most important criteria (with comments) were:

- 200 hour life--this was roughly equivalent to the best performance of bits and motors, and it led to the design concept of heavy duty bearings running in a sealed lubricant bath.
- Pressure drop over 1000 psi--this requirement on the pressure seal in the bearing package was equivalent to the pressure drop in the bit nozzles. This pressure may be excessive, since it is not commonly used in the field, even today.
- Operate at 250°F, soak at 500°F--these conditions represent typical circulating and shut-in temperatures in a geothermal well; they also preclude the use of most common elastomers.

The development of the bearing package was done by two contractors, Maurer Engineering of Houston and Terra Tek of Salt Lake City. Major Maurer tasks were bearing package design and seal selection, while Terra Tek was responsible for testing of seals and complete bearing packages.

In the more detailed summary of results that follows, some activities will be described topically; that is, a narrowly defined subject will be completely covered from the beginning of the program. The most recent activities will, however, be presented in chronological order to give an impression of the test program flow.

II. APPROACH

The bearing package development was quickly seen to revolve around the central problem of the seals to contain the bearing lubricant. There are two of these seals--both allow shaft rotation but the floating piston has essentially zero pressure drop, while the lower seal has a ΔP equal to the pressure drop in the bit. (Figure 1) Both seals are heated by the geothermal formation and by the friction of rotation. Both seals may also be degraded by the abrasive cuttings carried in the drilling fluid. Added to these difficulties are the high rotational speed (~500 RPM) and pressure drop (1000+ psi) required of the bearing package.

Because of the large number of variables--seal design, lubricant, shaft surface finish, drilling fluid, etc.--affecting the seal selection, it was impractical to test each candidate seal in a full-scale bearing package. Not only is the bearing package slow to disassemble for seal replacement and difficult to instrument, but testing it requires a large and expensive facility. The basic approach, shaped by these factors, had two components: (1) use a relatively simple screening machine to rank candidate seals; and (2) reduce the number of variables by holding some of them constant in the screening program. Although the screening machine test conditions were to be as realistic as practical, the concept of ranking the candidate seals meant that their absolute performances were not crucial as long as their relative results were valid.

There were several possibilities for failure criterion in the screening tests, but eventually a total lubricant leakage of one gallon was chosen as the standard. Since this is approximately one-half the volume of lubricant in the bearing package reservoir, the seal life in the screening test would be more conservative than a full-scale test.

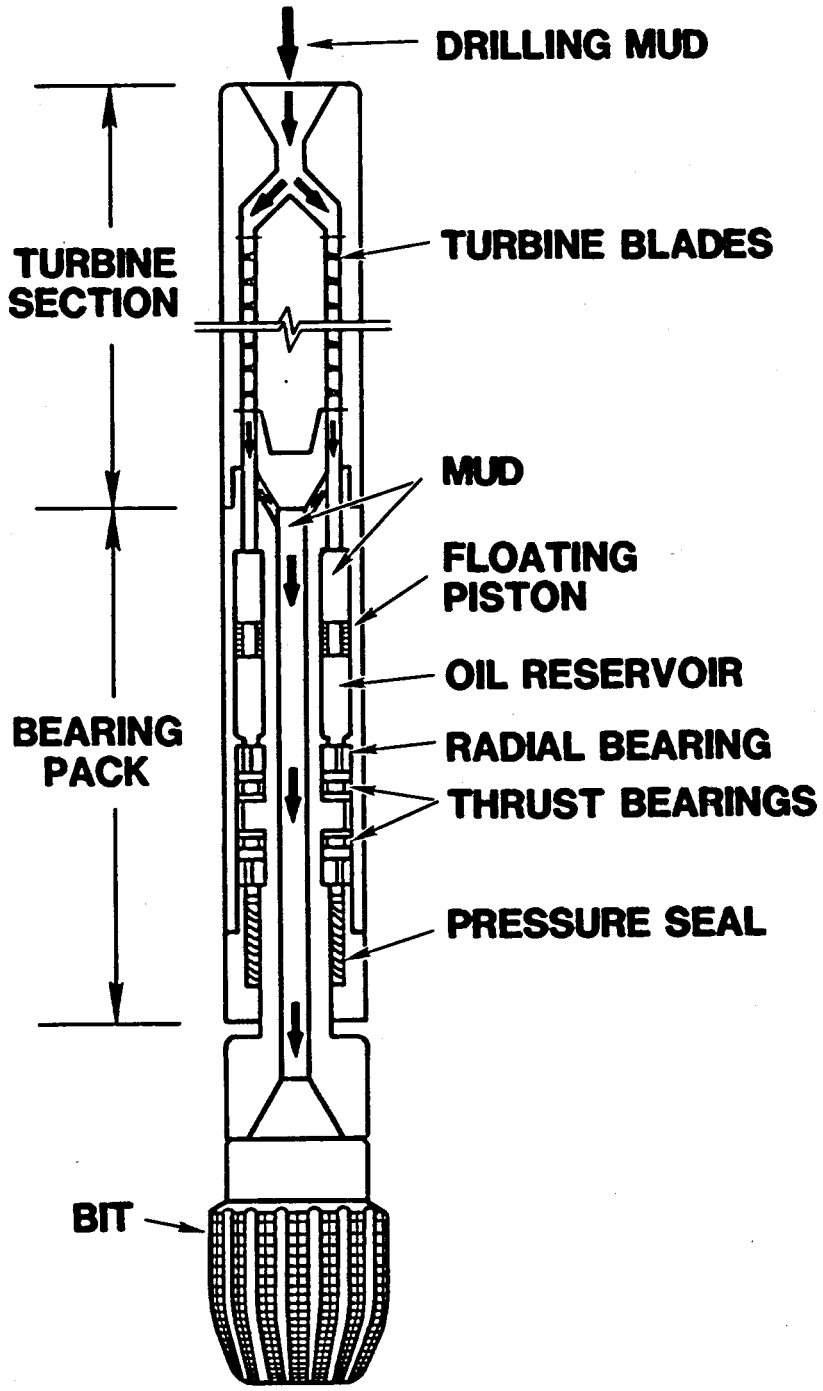

Figure 1. Turbodrill Assembly

Some aspects of the screening test procedure (such as the 1500 psi pressure drop) would tend to shorten the seal life compared to field use, while others (such as the lack of abrasive fluid and of radial and axial vibration) would tend to lengthen it. Balancing all these factors, it appeared that seal life in the screening machine would be at least representative of seal life in bearing package field use. This led to the additional stipulation that if a seal survived for 200 hours without leaking one gallon of lubricant, the test would be ended.

Once this approach to bearing package development was established, the contractors went about their respective tasks. Maurer Engineering was responsible for design of a bearing/seal package (BSP)--which was a modification of an existing Maurer unsealed design--and for selection of seals to be tested. Terra Tek was responsible for the design of two major pieces of test equipment--the Seal Test Machine (STM) used as a screening device and the Bearing/Seal Package Test Facility (BTF) used for tests of the full-scale BSP--and for the tests performed in them. Another machine, a Lubricant Test Facility (LTF), also provided valuable information but was originally built by Terra Tek for a program involving high-temperature roller bit lubricants. All of these devices, which were built and used at Drilling Research Lab (a subsidiary in Salt Lake City of Terra Tek), are described in more detail in the following section.

III. HARDWARE DESIGN

A. Bearing/Seal Package

The major function of the BSP is to support the axial and radial loads imposed during drilling on the driveshaft that turns the bit. The axial loads are in both directions--down because of the hydraulic force on the turbine blades or the rotor, and up because of the force of the

bit against the hole bottom. These forces are fairly large (at least 20,000 pounds) but are frequently similar in magnitude, giving a fairly small net force. At some times, such as rotating off bottom, they are completely unbalanced and require the thrust bearings to carry the full load.

Common bearing designs for downhole motors were rubber friction pads or metal rolling bearings, each operating with the drilling fluid as lubricant. The rubber pads had the advantages of simplicity and low cost, but suffered from the necessity of closely balancing the up and down thrusts and from the inefficiency of high friction (as much as 40% of the motor's torque could be absorbed by the bearing pads). The requirement for load balancing also means that drilling is frequently done with an inefficient combination of bit weight and hydraulics. The metal bearings had much less drag, but the drilling fluid lubrication sharply reduced their lifetime and load rating. The Maurer BSP was designed with large (4 in ID x 7 in OD) roller thrust bearings to give high load capacities and maximum life whether running in mud or oil.

Radial bearings are a less severe problem because the lateral loads on the bit--such as those during directional drilling--are smaller than the thrust loads and there is more room to use larger capacity bearings. This bearing package uses radial roller bearings with a capacity much higher than expected loads.

This bearing package has been used as a "leaky" system (Figure 2)--that is, the drilling fluid is passed through the bearings to cool and lubricate them. A flow constrictor is used on the downstream side of the bearings to control the amount of fluid through them. Although this system is relatively simple, it has very little chance of lasting for 200

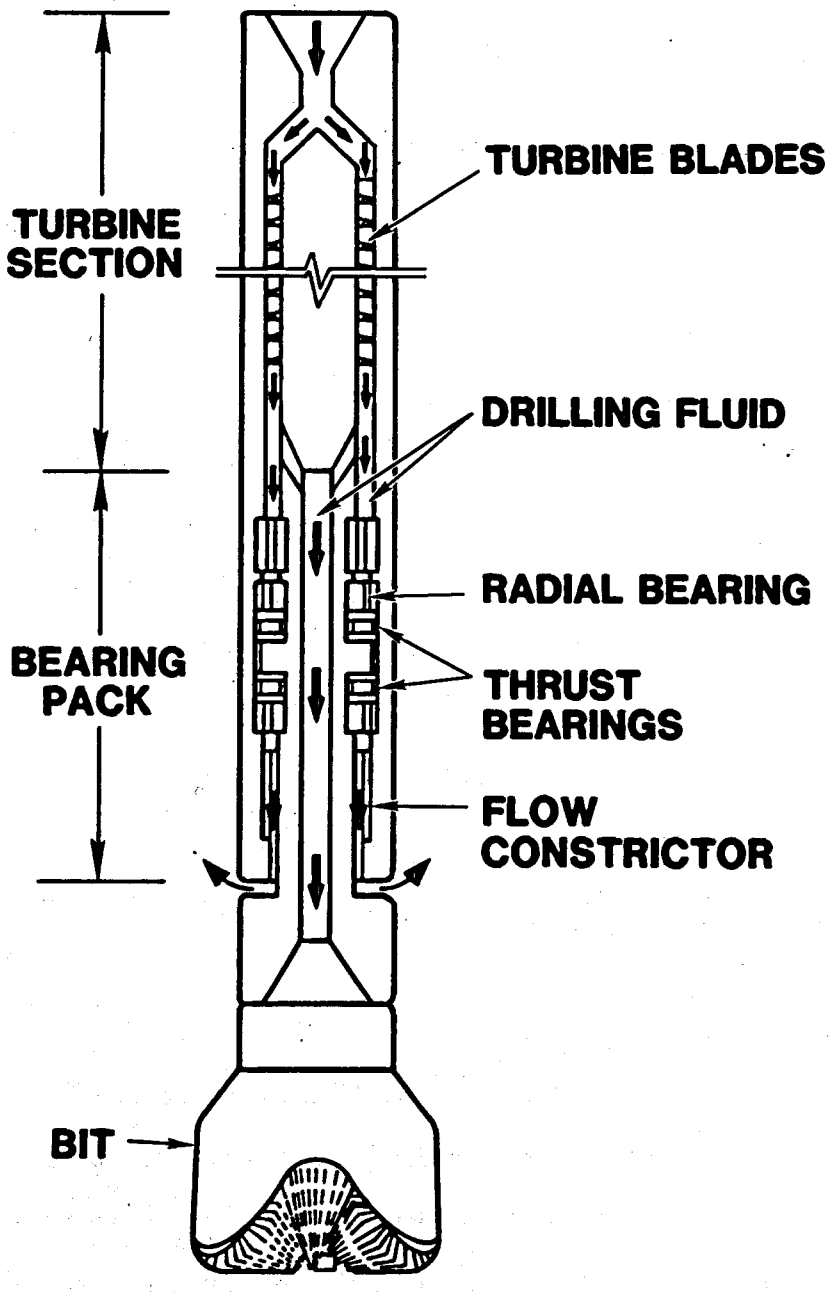

Figure 2. Mud-Lubricated Bearing System for a Typical Downhole Motor

hours even if clear water could be used as the drilling fluid. To allow the bearings to operate in an oil bath, the leaky unit is modified by replacing the flow constrictor with a rotary pressure seal and by inserting a floating piston in the annular space between the rotating shaft and the outer case. In this arrangement, the drilling fluid pressure on top of the floating piston keeps the oil in the reservoir at the same pressure. Since there is a pressure drop as the drilling fluid flows through the bit, the same pressure drop acts across the rotary seal between the bearing lubricant and the wellbore annulus. Assuming that there is a small leakage at the rotary seal, some lubricant will be lost into the annulus and the floating piston will move down the length of the reservoir to keep pressure on the remaining lubricant. The complete BSP is approximately 7-3/4" in diameter and 96" long.

The great majority of work in this program has been devoted to finding a seal that would achieve a low leak rate under the conditions of pressure, temperature, and rotary speed imposed by the BSP design. Selection of the early candidate seals and baseline tests will be described in a later section of this report.

B. Seal Test Machine

The major function of the STM is to screen and rank various candidate seals more quickly and cheaply than could be done in full-scale tests with the Bearing/Seal Package. Although the emphasis is on comparative performance, the validity of the ranking depends on having the test conditions as realistic as practical.

The most important requirements on the STM design were:

1. size and type of seals to be tested
2. seal environment to be created

3. measurements to be taken

4. ability to change seals quickly.

Many design concepts were considered and the one chosen is shown in Figure 3. Basically, the STM tests two full-scale (5 in ID x 6 in OD) seals at once so that the same pressure drop in opposite directions gives a zero net axial force on the rotating shaft. The rotating surface is a replaceable sleeve which can be cooled by water flowing behind it and which carries thermocouples as shown in Figure 4. The STM is driven by an electric motor through a transmission (Figure 5) to allow various rotary speeds and is fitted with threaded end closures for access to the test seals. The range of test parameters for the STM includes:

Hydrostatic pressure in STM - up to 5000 psi

ΔP across seal - up to 5000 psi

Temperature - up to 600°F

Rotary speed - 100 to 1700 RPM

Deliberate shaft eccentricity - to .010 inch

Seal length - up to 5 inches

Ability to choose number of seal rings, shaft surface finish, type of lubricant, starting temperature, etc.

Some other key features of the STM design are listed below:

1. The rotary shaft has replaceable sleeves for the test seals and the vessel seals. The life of the vessel seals is enhanced by a lower ΔP than the test seals, by the lower surface speed that results from their smaller diameter, and by more cooling water flow than the test seals.

2. In the original design, the vessel was heated by 30 one kW rod heaters. This power level was the result of an early testing concept that involved static seal heating in a 600°F vessel, but as test proce-

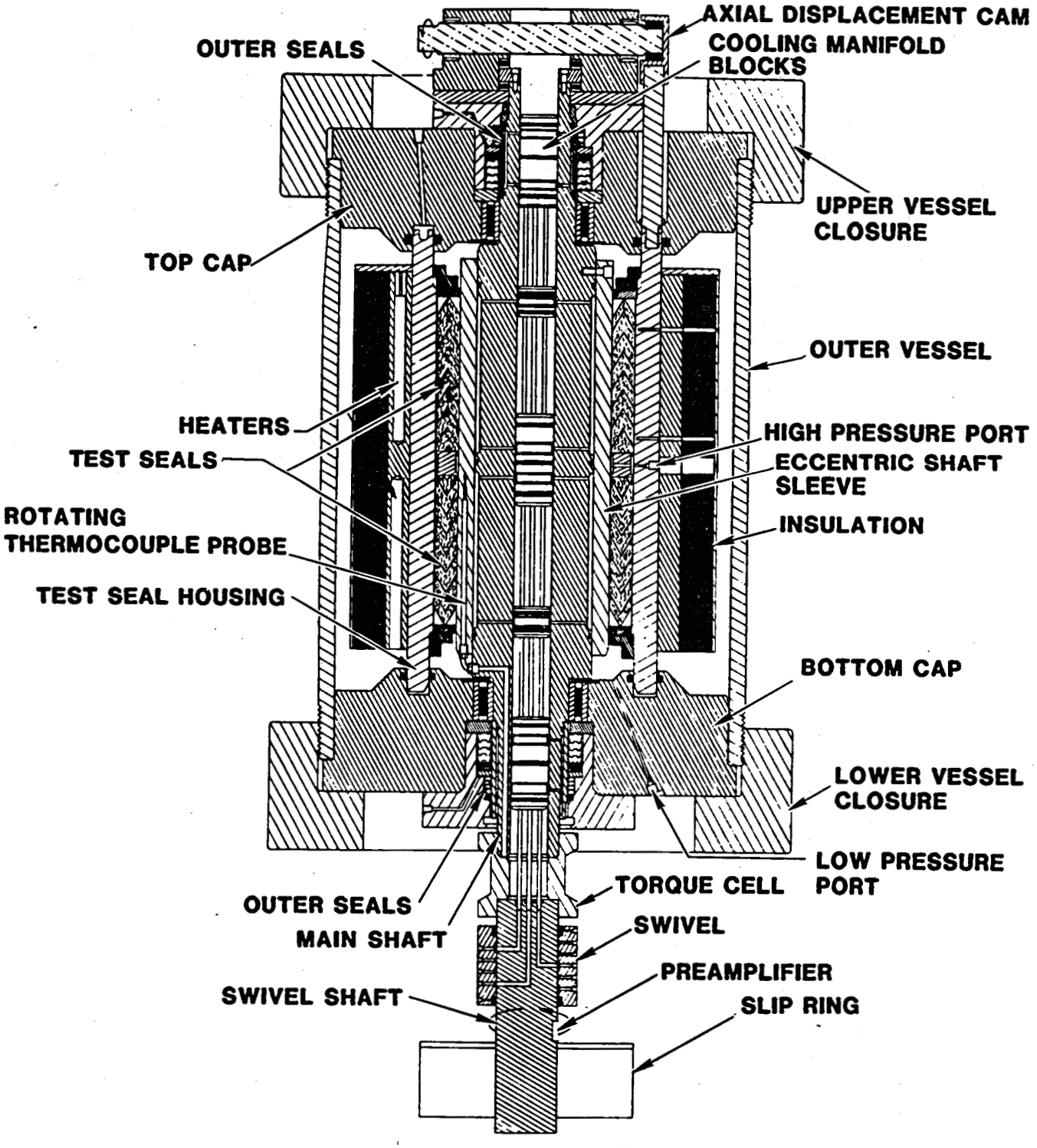

Figure 3. Seal Test Machine

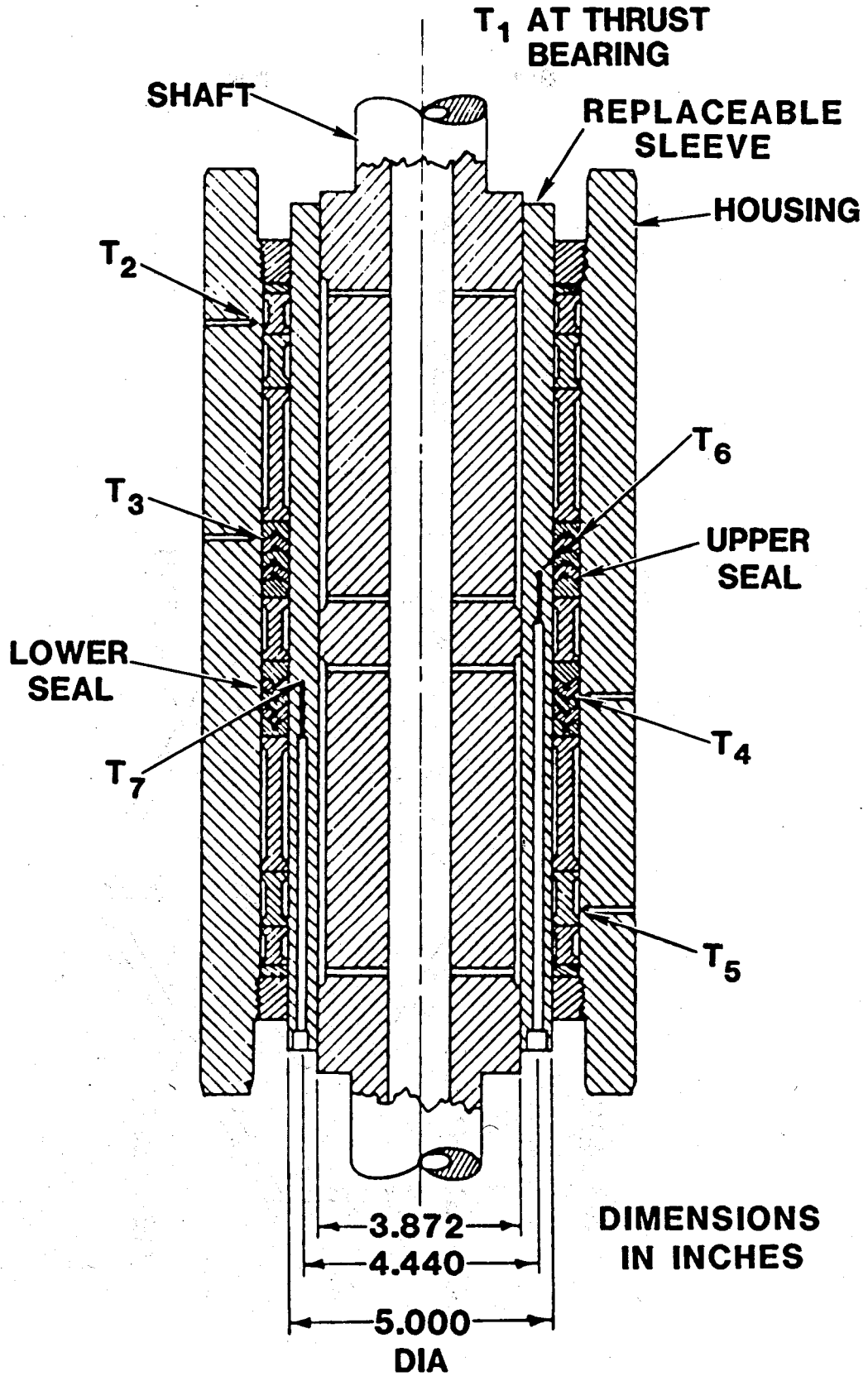

Figure 4. Thermocouple Locations in STM

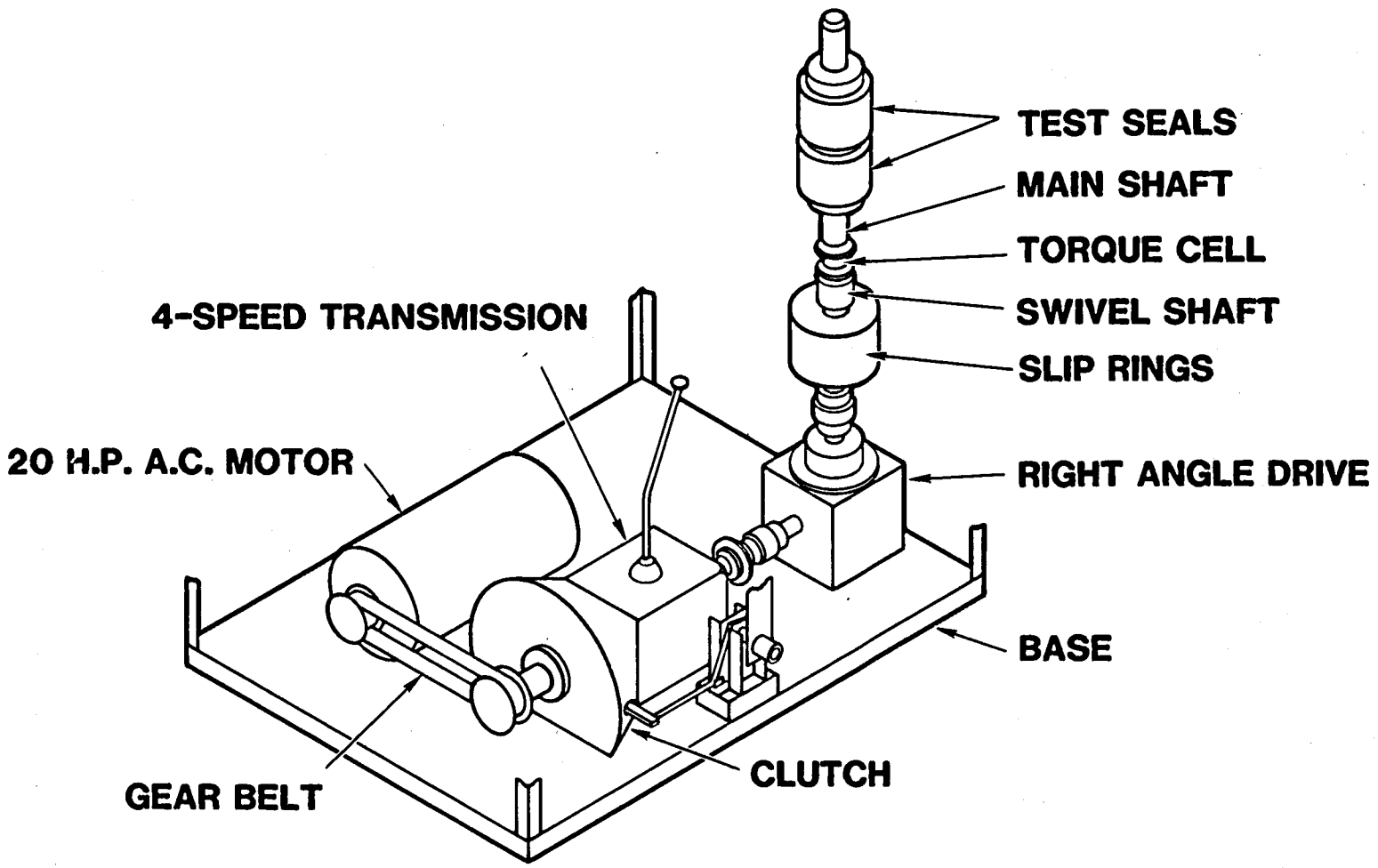

Figure 5. STM Drive System

dure evolved, a standard starting temperature of 250°F was established. This became significant when the rod heaters persisted in shorting out because of cracked insulation and when the heater controller gave serious RF interference to the instrumentation system. Both of these problems were solved by replacing the rod heaters with flexible band heaters (8.2 kW total power) and a new zero-voltage-switched SCR controller.

3. The torque cell was placed at the end of the main shaft to simplify the instrumentation and mechanical design. This means, however, that the cell reads the total torque of the two test seals, as well as the outer vessel seals. The torque of the vessel seals can be measured and subtracted by rotating the shaft with no test seals, but this still gives a combined torque reading for the test seals. It is mechanically possible to design a tester with individual torque readings, but it is a much more complicated device.

4. The cooling water flow behind the replaceable sleeve is necessary to simulate the heat removal by a 250°F circulating fluid in a real downhole environment. There are two major factors that determine the flow rate of the much cooler water in the STM: the cooling fluid is separated from the seal by a greater thickness of steel in the STM than in the BSP, and the flow rate is far less in the STM than in the BSP. Since it is important to simulate the heat transfer from the seal into the shaft, the cooling water flow is adjusted to give the correct temperature gradient in the sleeve at the shaft/seal interface. This gradient was derived from a combination of theoretical analysis in a one-dimensional heat transfer model and baseline experiments in which temperature was measured by the sleeve thermocouples (T_6 and T_7, Figure 4). The corresponding flow rate is 18 gal/hr and that rate remained constant for nearly all subse-

quent tests.

It is also clear that T_6 and T_7 are much lower than the temperature at the shaft/seal interface. Assuming a linear gradient in the sleeve, the interface temperature could be calculated, but this usually wasn't done because the failure criterion is leakage volume, not temperature.

5. Vessel heating is controlled by the temperature sensed at the outside (stationary side) of the seals (T_3 and T_4, Figure 4). These readings are brought up to 250°F before rotation begins and then maintained at or above this set point by the heater controller. Once the shaft rotates, there is usually enough frictional heat to keep these readings above 250°F without further input from the electric heaters; that is, the heaters are only switched on if the T_3 or T_4 readings fall below 250°F.

Other minor modifications to the STM have been made, but this summary describes the basic design and operating procedure. Further detail on the STM can be found in References 6-8.

C. Bearing/Seal Package Test Facility (BTF)

The function of the BTF is to simulate the downhole environment for tests of the Bearing/Seal Package. The BTF is a heated pressure vessel, with mud inlet and outlet, that is large enough to accept a complete BSP/motor assembly (Figure 6). The mud flow can drive a downhole motor attached to the BSP to provide rotation or a separate hydraulic motor--part of the BTF--can rotate the BSP if it is tested alone. Either programmable dynamic or static axial loads can be applied to the BSP and pressure pulsations can be introduced into the circulating fluid. The nozzle sub is used as a choke to raise the pressure in the BSP and the

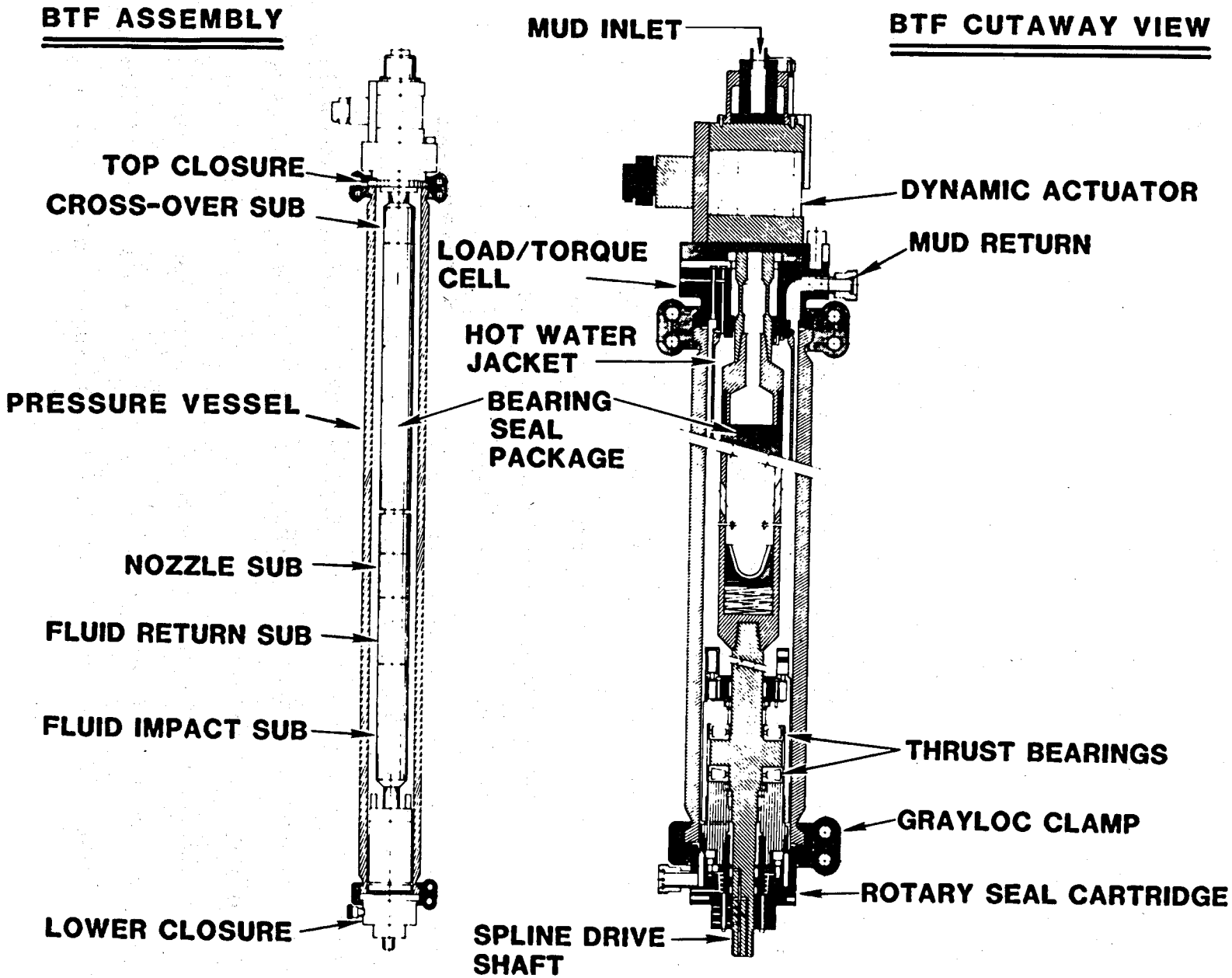

Figure 6. Bearing/Seal Package Test Facility (BTF)

fluid return sub/fluid impact sub combination is used to decelerate this high-momentum fluid before it leaves the BTF.

To expand this brief, general description of the facility there are more details on certain features.

1. The dynamic actuator is a servo-controlled hydraulic piston that can apply a static load up to 60,000 lbs plus a programmable varying load up to 60,000 lbs in either direction. The varying load--which can be an arbitrary nonperiodic waveform--has a frequency range of 3 to 10 Hz. These performance levels are derived primarily from data acquired by Exxon using a downhole recorder to measure forces at the bit. The force is representative of weight on bits up to 12-1/4" and the limit of 10 Hz is the frequency of pulses from each leg of a three-cone bit turning at 200 RPM.

2. The mud circulation to the BTF was originally supplied by the main mud pump at the Drilling Research Lab, giving an adequate flow rate to drive a downhole motor. Since the mud pump is essential to many other tests at the DRL, this scheme created severe scheduling problems. Late in the program, a smaller 30 gal/min mud pump was bought and dedicated to the BTF. Since the BTF drive motor turned the BSP, the new pump with a small choke gave plenty of ΔP and flow rate for circulation through the BSP. Scheduling became much easier, while retaining the option of using the big pump for motor tests.

3. The hot water system is designed to heat the BSP by circulating hot water inside a jacket that separates that water from the drilling fluid (Figure 6). The water jacket is not a pressure vessel, so that the hot water is at the same pressure as the drilling fluid. The original design required the hot water to circulate by convection, but this proved

unsuccessful. Terra Tek surveyed pump manufacturers for a high pressure, high temperature circulating pump, but these were so expensive that the idea was abandoned and the self-generated friction heat became the principal heat input to the BSP.

4. Somewhat associated with the hot water problem is the inability of the mud circulation system to handle mud at temperatures much above 170°F. The reason for this limit has never been precisely determined, but it appears that the suction side of the pump is getting the hot mud below its vapor pressure. The effect of these temperature problems is that the body of the BSP cannot be held uniformly at a high temperature during a test. This does not mean that the results are unrealistically optimistic, for none of the tests has approached the 200 hour goal and few of the failures appear to be related to high temperature.

5. A crucial factor in analyzing test results has been the lack of instrumentation on certain key parameters.

In contrast to the STM, where thermocouples are near the shaft/seal interface, the BSP has thermocouples in the outer case. Not only is a much greater thermal mass involved, but the thermocouple is separated from the interface by the thickness of the seals (which are typically good insulators). The result of all this is that the thermocouple reading is generally much lower than the seal temperature and lags it in time. It is impossible to use the temperature reading either to predict incipient seal failure or to know what temperature the seal reached during a test.

An even greater handicap in the test postmortem is the lack of information about the floating piston performance. Specifically, the movement of, and mud leakage by, the floating piston are uninstrumented so

that it is impossible to know how fast the lubricant has leaked out and mud has entered the bearings.

There is a port in the outer case just above the bearing section which allows lubricant sampling, but these samples do not always reflect the presence of mud in the oil and do not give any information about the floating piston position. In the existing test method, the usual failure indicators are the inability of the rotary seal to hold pressure and/or the increase in torque caused by mud in the bearings.

These data deficiencies could be alleviated by modifying or redesigning the BSP, but it would become much more complex and less representative of a true field-usable unit. If further testing were to be done in this program, however, these changes would be worthwhile.

The configuration of the BTF is the result of many detail design choices, the great majority of which have worked very satisfactorily. The program reports listed in the References describe many of the concepts that were considered, as well as the reasons for the choices that were made. With the invaluable advantage of hindsight, it is easier to identify things that could be improved in any future work.

D. Lubricant Test Facility (LTF)

The lubricant tester (Figure 7) was designed and built as part of a program to improve roller-cone bits for geothermal use. Since the effort to develop a BSP has the common denominator of bearing lubrication at high temperature and pressure, the data from these experiments can be useful in both programs.

The lubricant rankings derived from the LTF were based on the lubricants' load carrying abilities at high temperature and pressure. As indicated by Figure 7, a steel ring running in a partial lubricant bath

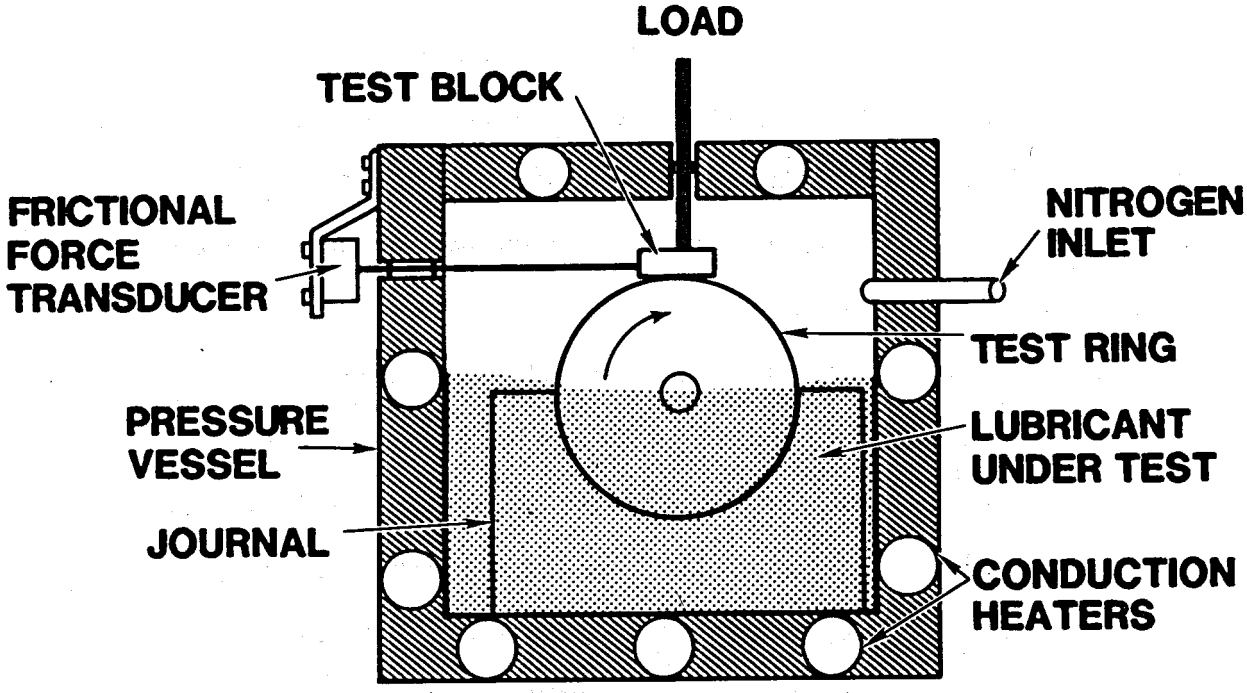

Figure 7. High-Temperature Lubricant Tester

rotates at a constant speed while rubbing against a steel wear block under a 150 lb load. The test chamber is filled with nitrogen to prevent oxidation and is pressurized to reduce the volatility of the lubricant. After 5000 revolutions at 72 RPM the wear block is removed and the width of the wear scar created by the ring friction is measured. This, with the block width, gives a load bearing area and, therefore, a lubricant stress. Since we want the lubricant to have a high load capacity, the narrower wear scars indicate the better lubricants. Over forty different lubricants were screened at 400°F and the best performers were checked again at 600°F. A complete table of test results is in Appendix C, but in general there was a wide range of performance, with order-of-magnitude differences in wear scar width.

The most successful lubricant tested is a product of Pacer Lubricants, Inc., in Houston, and is a synthetic hydrocarbon with proprietary additives. It is identified in the test results as PLX-014, and it has been introduced to the commercial market under the name "Geobond." Although a lower viscosity version of this oil was successfully used in the STM at seal temperatures near 700°F, tests in full-scale heated bits indicate that its high temperature load-bearing properties need more investigation.

IV. EARLY SEAL TESTS IN THE STM

A complete tabulation of all tests in the STM is in Appendix A, but this section has brief descriptions of the classes of seals tested in the early part of the program.

A. Debug

A series of about fifteen tests--which is not included in the tabulation--was performed before the actual screening began. These tests

provided an opportunity to discover problems in the instrumentation, data recording, operating procedure, and in the definition of failure criterion. The longest of the debug tests was about five hours; the seal did not fail, but the shaft was turning at a low rate (~210 RPM). The seals used for these tests were chevron-shaped packing made from Buna-N reinforced with cotton duck. No attempt was made to run the seals until failure, and some of the seal packs were used on more than one test.

B. Baseline

A seal pack design commonly used in downhole equipment was tested seven times in various conditions to give baseline data at high temperature. The seals were the same as those used in the debug tests (Figure 8), that is, a Buna-N chevron packing reinforced with cotton duck and designated UTEX 701. All seal packs were tested to failure, but that occurred after times ranging from nearly 53 hours to just over one hour. The changing conditions for each test undoubtedly influenced the lives, but it was difficult to draw any general conclusions correlating seal life with test parameters. Except for the obvious fact that the tests at lower speed (211 RPM vs 412 RPM) ran much longer, the effect of other changes such as number of seal rings, type of back-up ring, and cooling flow rate was not clear. The readings from the shaft thermocouples showed that the seals usually failed fairly quickly after reaching a temperature of 275°F-300°F, but the leakage behavior varied a great deal in reaching this temperature.

Aside from the variables deliberately introduced into the tests, there were possible manufacturing variations in the seals, inadvertent small changes in the installation procedure, and the effect of unplanned stops caused by equipment problems. These tests were convincing evidence

that the baseline seals could never reach a 200 hour life, and the tests also showed some relation among seal temperature, torque, and leak rate. The failure mode of the seals seemed to be high temperature hardening of the elastomer which caused either high leakage or shaft seizure. The erratic results in this test series were a hint of a problem that was to plague this program through its course--the lack of repeatability in seemingly similar tests.

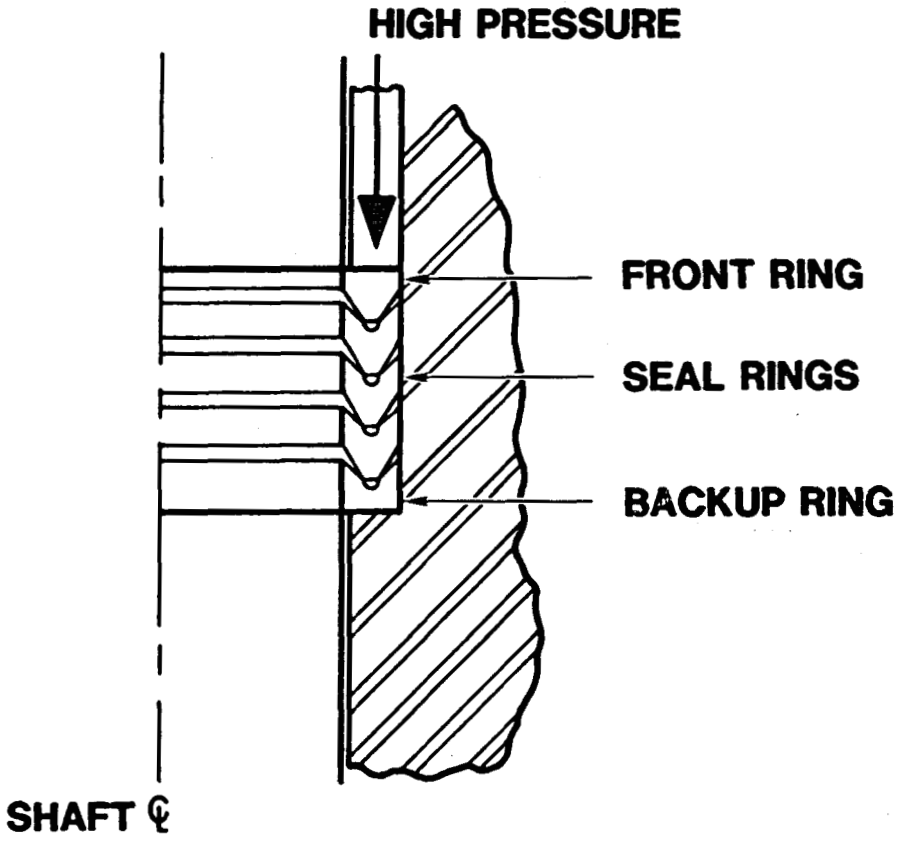

Figure 8. Chevron Packing Seal

C. Elastomer (42D)

Five tests were done with another elastomer seal pack that was identical in geometry to the UTEX 701 pack used in the baseline tests. The Buna-N rubber in the 42D seals was impregnated with graphite for lower friction. The shaft thermocouple readings indicated that the friction reduction was not especially effective, however the graphite content did seem to give the seals better heat resistance because they operated for longer times at temperatures above 300°F than the baseline seals. Four of the five tests were done at 211 RPM shaft speed, but the longest life was still only 24 hours so further effort on these seals was abandoned.

D. Elastomer (RD181)

This seal had a different cross section (Figure 9) and a different material (Viton) from the previous designs--it was tested twice. The Viton is softer than the Buna-N used before, and has a higher temperature resistance. The coefficient of friction is higher, however, which apparently negated the advantages, because these tests were not significantly longer than the baseline.

E. Elastomer (UNEEPAC)

The UNEEPAC seals (Figure 10) are manufactured by Johns-Manville and are made of neoprene reinforced with flocked asbestos. This design has been used successfully on other oil-field equipment and is also used for the outer vessel seals on the STM. The performance of these seals was comparable to the earlier elastomer models, with an average life of 18.5 hours and a failure mode that was predominantly wear on the seal inside diameter.

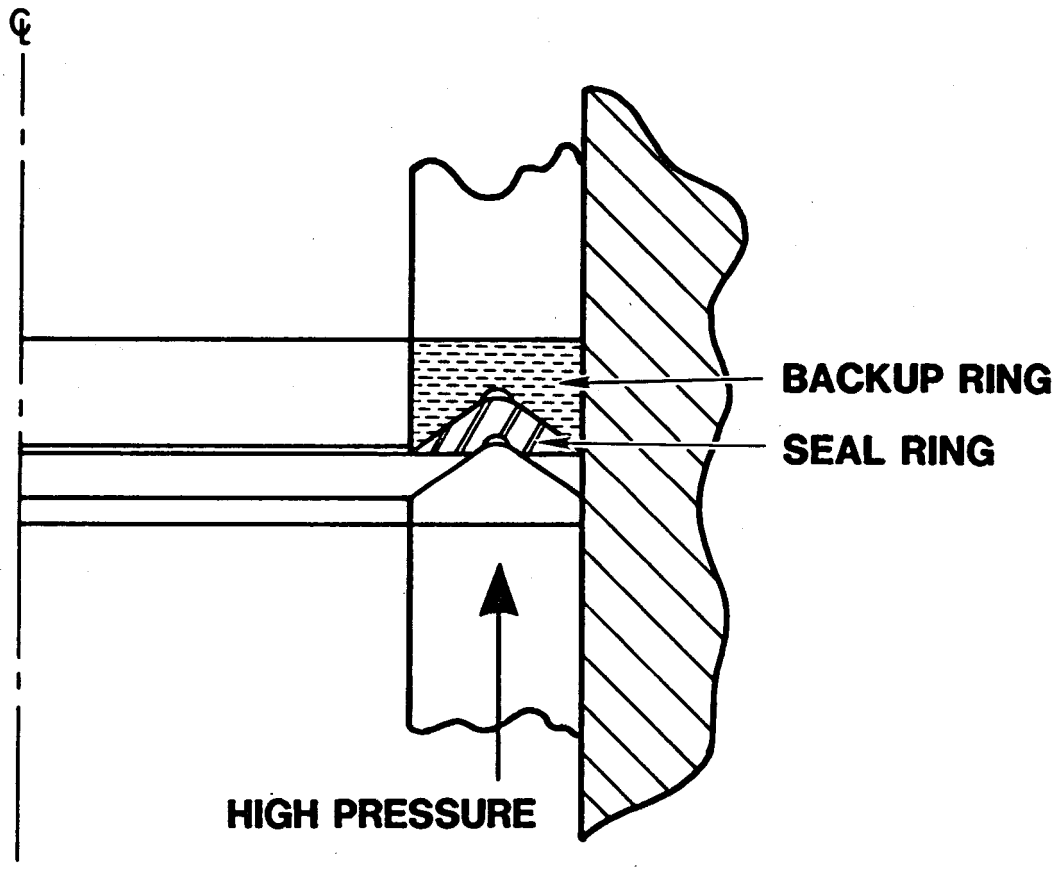

Figure 9. 125K-RD 181 Seal

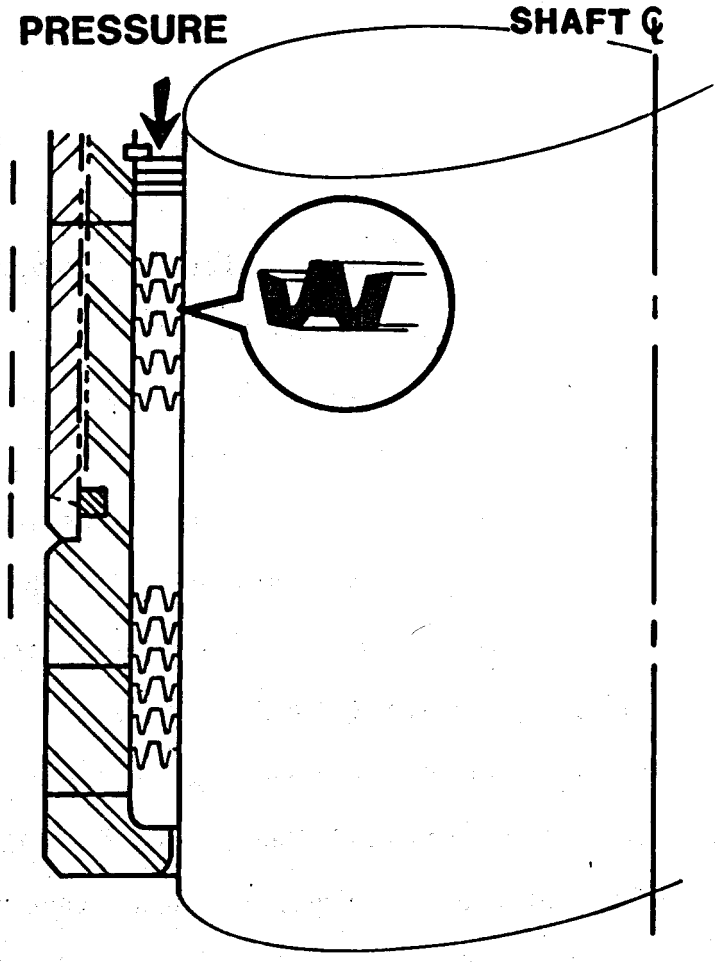

Figure 10. Johns-Manville
UNEEPAC Seals

F. Elastomer (Canted)

During this program Terra Tek tested five variations of the canted seal design. Although the details differed, Figure 11 shows a typical configuration. The principle of the canted seal is the elimination of line contact on the rotating shaft, thereby reducing heat buildup and localized shaft wear. Although this idea is attractive, it was not evaluated because the seals never ran long enough to see these effects. Four of the tests did not hold the initial pressurization and in the fifth, after the seal had been forced into position by reverse pressure, the test was only 45 minutes. The reasons for the failure to hold pressure seemed to be largely associated with the installation of the separate seal rings and backup rings. In some cases the seal lips were damaged during installation and in others the various rings rotated relative to each other. Most of these problems could be solved by a cartridge seal pack--made and installed as a single unit--but this kind of design would not fit into the 6 inch OD of the STM test cavity.

The seal which ran briefly failed from a large tear in the lip. Since the seal material was basically Buna-N the rip may have been caused by heat degradation, but analysis (Ref. 17) shows that the friction component parallel to the shaft axis loads the seal lip almost as much as the pressure and thereby may have locally exceeded the material strength.

Most industrial applications of canted seals are in high speed, low torque (i.e., low pressure) situations where the mechanical loading of the seal lip is not as crucial. Use of a cartridge design, however, combined with better materials tested later in the program, might greatly improve the canted seal performance. Although the test results have been very poor, the worth of the canted seal design has not been truly evaluated.

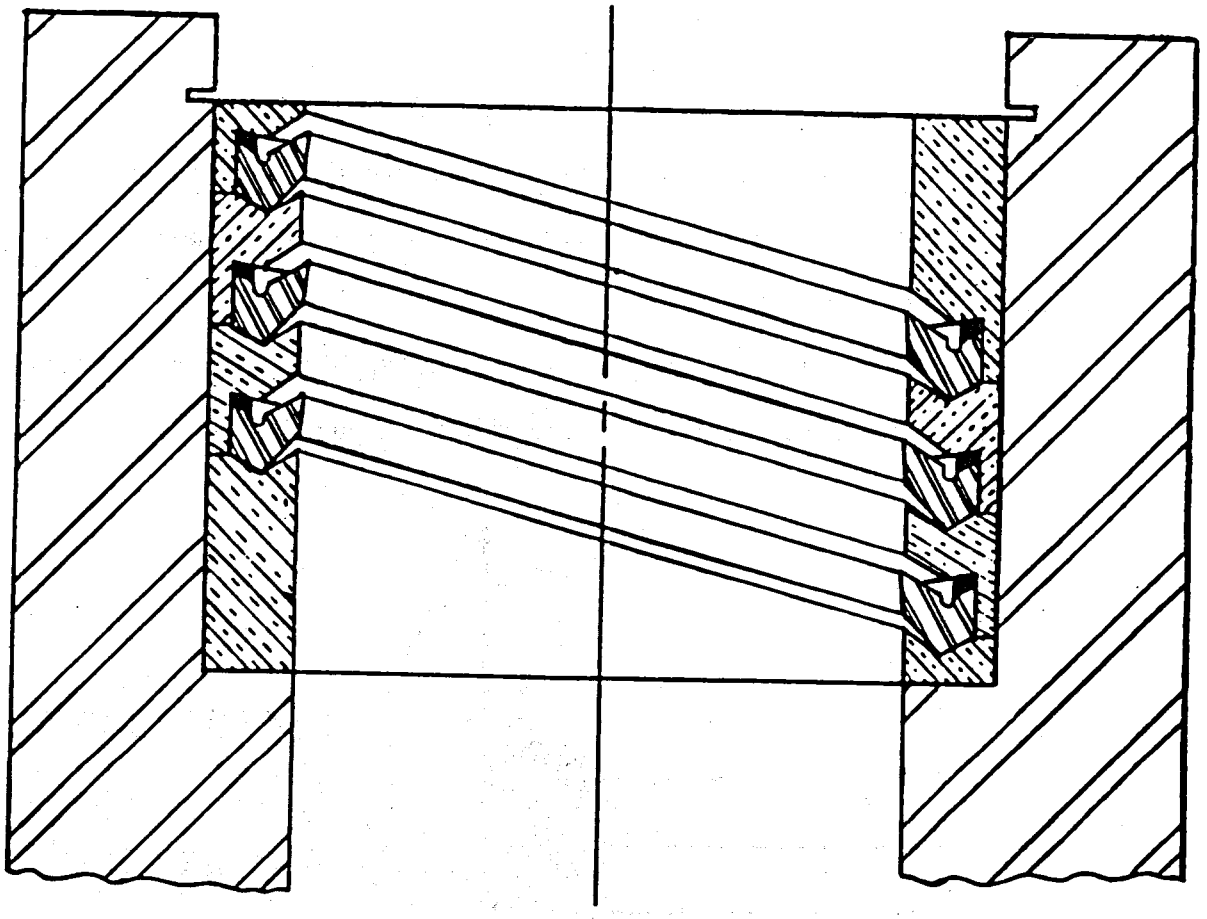

Figure 11. Canted Lip Seal

V. GRAPHITE BASED SEALS

During a two year period, 16 graphite based seals were tested in the STM. The seals were made either from powdered graphite pressed into shape around a metal mesh matrix (Figure 12A) or from Grafoil®, a proprietary graphite-based material made by Union Carbide, sandwiched between preformed metal rings (Figure 12B). In theory, the graphite seals have several advantages:

- the material is insensitive to high temperature
- self lubricating properties allow a smoother shaft finish and low coefficient of friction creates less torque--both characteristics that reduce heat input
- thermal conductivity of graphite is much higher than elastomer, thus transferring heat away from the interface better,

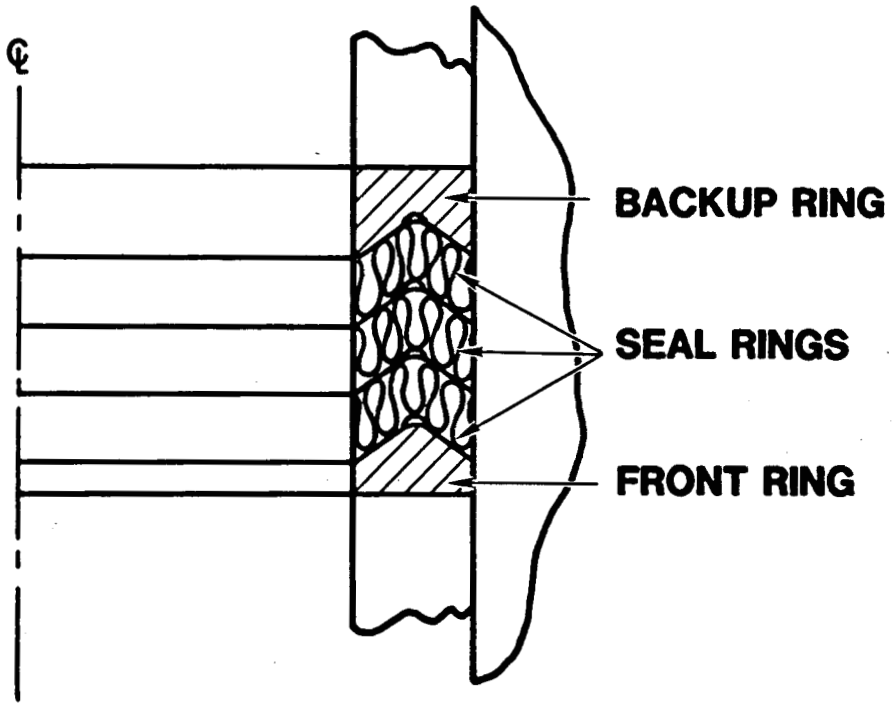

Figure 12a. Cross Section of Graphite-Metal Matrix Seal Pack

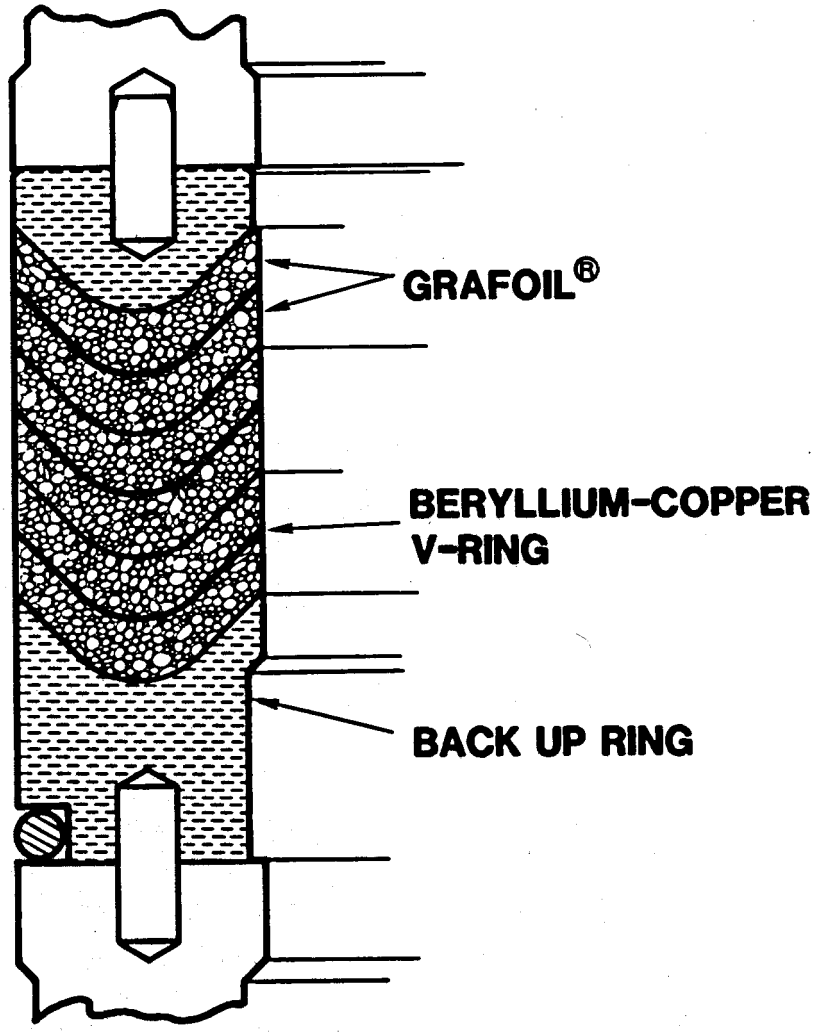

Figure 12b. Cross Section of Grafoil-BeCu Seal Pack with Flexing Lip Backup System

but the tests showed that there were severe drawbacks as well. The failure mechanism of all the graphite seals is linked to the combination of low shear strength in the graphite and high frictional forces at the shaft/seal interface. These conditions degrade the seals in at least three ways:

1. The friction force detaches small pieces of graphite from the seal ID and these migrate along the shaft out of the seal cavity, leaving insufficient material to deform into a new seal surface. Sometimes this process is accelerated by the graphite caking on the seal surface, which can cause local stresses even higher than normal. This process is more typical of the softer Grafoil seals where it also creates gross seal profile deformation and distortion.

2. If the seal is rigid enough not to deform badly, the friction wear simply enlarges the seal ID until a permanent leakage path is established. This behavior was common in the stiffer graphite/metal matrix seals.

3. In both types of seal, the friction forces may have been responsible for internal fractures of the seal rings, thus forming leakage paths through the cross section of the seal.

In spite of these problems, development of the graphite seals was pursued vigorously because of good performance in an early test. Test 024 lasted almost 41 hours after a better shaft finish (4 μ inch) and a backup ring with very small clearance (.001 inch) were added to the test setup. The significance of this performance is lessened, however, by the unrepeatability of results--no other graphite seal ever did that well again.

The first two failure effects could be greatly mitigated by a backup ring with a very small shaft clearance, so much of the development effort

was devoted to different types of zero clearance backup (ZCB) system. Two types that received the most attention are shown in Figures 12B and 13. Each depends on flexure of the metal backup ring to give zero clearance with the shaft--multiple flexing leaves in Figure 13 and an undercut ring with a flexible lip in Figure 12B. Although these systems did improve performance compared to the large-clearance (.015 inch) backups first tried, the life increase came from trading seal failure for backup failure. Since the ZCB depends on the seal pressure drop forcing the backup lip against the shaft, there is always metal-to-metal contact. The flexing lip has the ability to compensate for some wear, but eventually either the lip or the shaft will be ground away so much that there is a leak.

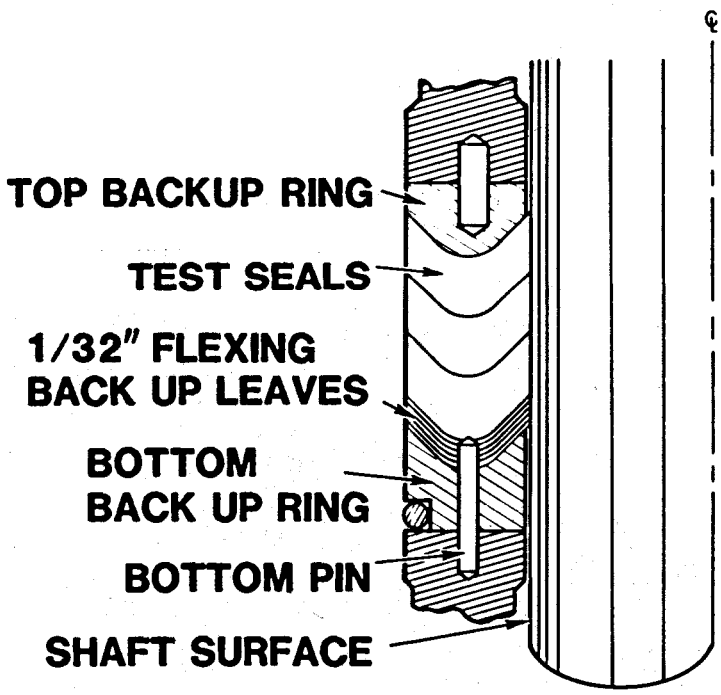

Figure 13. Flexing Leaf Zero-Clearance

These test results led to abandonment of the graphite seals even in the laboratory, but there are at least two additional difficulties for field use in the BSP. First, the shaft finish must be very smooth under the graphite but it is worn while running. This means that any time a seal is replaced, either the shaft surface must be refinished (by a replaceable sleeve) or the seal contact point must be moved by using spacers around the seal pack. This point is rather minor but the second problem--that of radial shaft movement--is not. The STM has a fairly short stiff shaft supported between two sets of radial bearings, but the BSP has its shaft cantilevered from radial bearings with the seal between the bearings and the bit (see Figure 1). With maximum tolerances in the BSP the shaft could have a radial deflection as great as .0045 inch at the seal position, and minimum tolerances would give up to .0025 inch. Even if we only consider the best case, it is unlikely that any ZCB system could survive random radial motions that large.

VI. REDUNDANT SEALS

The rationale for a redundant seal is based on the theory that a seal which is in place on a rotating shaft--but not loaded by pressure--will experience little or no wear. A pair of seals can then be put in place so that only the first one is pressurized until it begins to leak, whereupon the second one will be pressurized and take the load. Although no redundant seals were tested in this program, a great deal of design effort was expended and many ingenious ideas for sensing first seal leakage and triggering the second seal were proposed (see References 9-11). The principle of redundancy can even be extended to more than two seals, but the design becomes more and more complex.

Redundant seal development was not pursued for two major reasons:

1. Since we did not have a clear understanding of the failure mechanisms and their cures in the seals being tested, it seemed premature to introduce the additional complexity, expense, and failure opportunities of the redundant seal operating apparatus.

2. A two-stage redundant seal only helps to reach a 200 hour life if a single seal has consistently shown a life between 100 and 200 hours. Since only one test (out of more than 60) had a life in this range and it was not repeatable, it did not appear that even a successful redundant mechanism would help to reach our goal.

Redundant seals have been successful in practice (e.g., Exxon high pressure swivel design) but that case was for much lower speed and temperature and for an accessible location where the second seal could be triggered by hand.

VII. TESTS OF COMMERCIAL BEARING/SEAL PACKS

In mid-1980 we began to hear several anecdotal reports of 100+ hour runs by motors in difficult drilling conditions (i.e., maybe industry had already solved our problem). In an effort to define the commercial state of the art, we surveyed all U.S. and most European drilling motor manufacturers and contacted the companies that used sealed bearing assemblies. The three companies that were identified (Dyna Drill, Baker Service Tools, and Bat-Jac Tool Co.) were invited to participate in tests of their tools. The important terms of the proposal were: (1) Sandia would pay all testing costs (2) Sandia did not require details of the bearing package design (3) test results would be published by Sandia. Baker Service Tools and Bat-Jac Tool Company declined the invitation, but Dyna-Drill agreed to supply two kinds of bearing packages. Their sealed

unit operated on the basic principle of metal bearings in an oil bath, but they also had an unsealed, mud-lubricated unit that used hard material for the bearing surfaces. The potential for low friction and the lack of elastomers in the unsealed bearing assembly made it an interesting candidate for geothermal drilling.

The tests in the BTF began with the unsealed unit. To measure the torque variation under different drilling conditions, a test matrix which varied axial load from 0 to 25,000 lb and pressure drop across the bearings from 100 to 1000 psi was applied to the bearing assembly while torque was measured. Average torques were moderate, usually under 200 ft-lb, with a general but inconsistent tendency to be lower when net thrust force was lower. The mud passing through the bearing assembly was only about 6°F warmer at the exhaust, also indicating low friction.

Since the torque performance was promising, the bearing assembly was next prepared for an endurance test to determine if its lifetime was near the 200 hour goal. The tool was operated with an axial load of about 32,000 lb and a bearing pressure drop of 600-800 psi at a rotary speed of 800 RPM. Rotation was very smooth for almost nine hours when the torque suddenly tripled and became erratic. The test continued for approximately two more hours but torque remained high and rotation was very rough. When the bearing package torque exceeded the capacity of the BTF's drive motor the test was ended and the bearing assembly was returned to Dyna-Drill. It was disassembled to find the cause of failure. The conclusion of the Dyna-Drill engineers who inspected the tool was that several of the hard material bearing pads had come loose and caused partial seizure of the rotary shaft. They also stated that the remedy for this problem was a fairly simple design change.

Two sealed bearing assemblies (SBA) were tested next at the conditions: 400 RPM, 700 psi bearing pressure drop, and 15,000 lb axial load. The first SBA was described by Dyna-Drill as having run more than 300 hours in their lab but lasted less then ten hours in the BTF. After disassembling the SBA at Dyna-Drill, its mechanical face seals were found to be badly broken. The coating on one of the faces had apparently worn through and allowed the opposing face to rub on the bare steel substrate. Even though the wear rate had been low, the long previous runs in the Dyna-Drill lab might have caused the seal face wear, so the second SBA (with an unused seal) was prepared for test. This tool also had a very short run and also failed by wear of the coating on the seal face. After further examination, Dyna-Drill engineers stated that the metal face coating on both the failed seals was well below the thickness specified to the seal manufacturer and that the seal failures should be attributed to the inadequate coating.

We do not claim or believe that these tests offer conclusive evidence on the state of industry's bearing package design. Nothing in the description of these tests should be construed to mean that Dyna-Drill's bearing packages were of poor design or quality, either then or now. Published case histories (Ref 19) show that long bearing package runs have been made in the field, and it is possible that lab test criteria are more severe than field use, however, the fact remains that long runs in controlled laboratory conditions have not been publicly demonstrated. Unfortunately, since the time and budget for this program are expended, it is unlikely that such a demonstration will occur. It does appear, however, that the assurance of this problem's solution, coupled with the increasing use of straight-hole drilling motors, could significantly

lower the cost of geothermal drilling and thus expand the access to this resource.

VIII. TESTS OF NEW SEAL TYPES IN THE STM

Since none of the seal types tested until this time (early 1980) had seemed especially promising, several new concepts and materials were introduced to the screening program. In general, the graphite-based seals were unsuccessful for the reasons described in Section V, the canted seals (although perhaps not fairly evaluated) had not shown good performance, and the elastomer seals suffered material degradation from the high temperatures produced by frictional heating. The last problem offered three avenues for improvement: reduce heating by reducing friction, reduce temperature by conducting heat away faster, and use a material that is not degraded by the high temperature. All of these methods were tried and are described below.

A. CONDUCTIVE SEALS

Hybrid seal packs with combinations of elastomer and graphite chevron seals were tested with the hope that the graphite rings would help to carry the heat away from the elastomer. These designs were still troubled by the loss of material from the graphite, so further effort on this idea was abandoned.

B. LOW FRICTION SEALS

The candidate for a low friction seal was the Variseal®, one of several brands of a seal type generically known as U-seals (Figure 14). The body of the Variseal is a proprietary material, but a typical U-seal might be made of carbon-loaded Teflon with springs to force the legs of

Registered trademark of American Variseal Company

the U apart. Once the springs hold the seal lips in contact initially, the pressure maintains the sealing surface contact against the shaft.

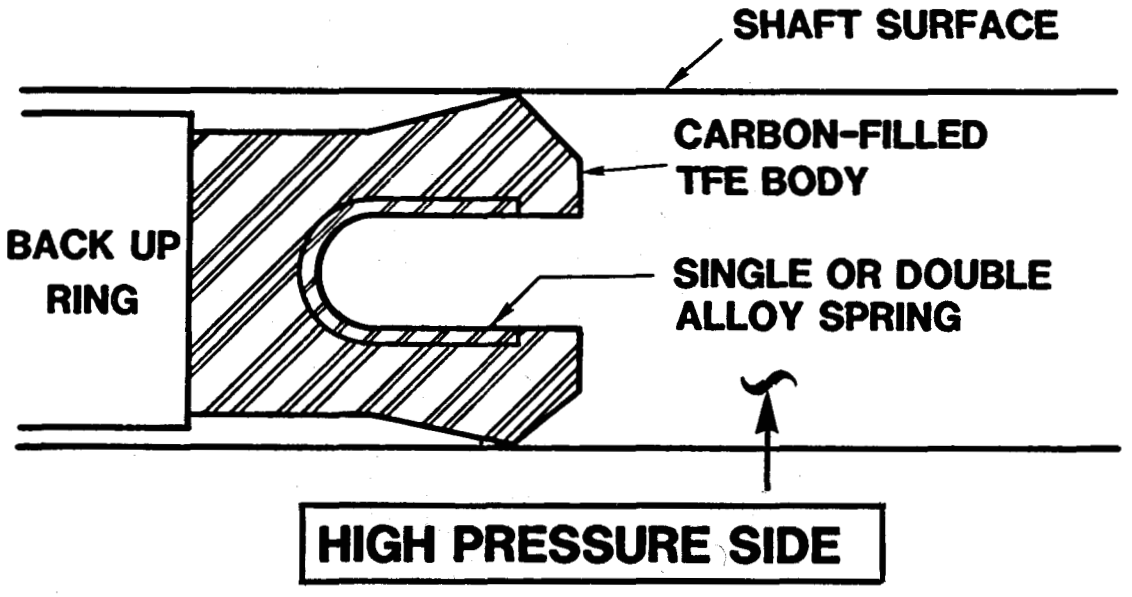

Figure 14. Variseal Diagram

Tests of the Variseals produced mixed results. Each of the first two runs (041 and 042) lasted about five hours, but post-test inspection showed that the back-up ring clearances were over 0.060 inch--far greater than recommended. This large gap had allowed the seals to extrude between the shaft and the back-up ring, eventually causing early failure. The torques for these tests were also fairly high (~120 ft-lbs), possibly an effect of the extrusion.

For the next test (045), back-up rings with a 0.005 inch clearance were made and installed. Torque was much lower (~50 ft-lbs) and the test duration was the longest to that date, almost 165 hours. Efforts to duplicate this test (047 and 053) failed, with torque again over 100 ft-lbs. Detailed analysis of the latter failures is discussed in Section

IX and tests of a second generation seal are described in Section X.

C. HEAT RESISTANT SEALS - Four tests (043, 044, 049 and 050) of non-elastomer high temperature seals gave uniformly dismal results--a maximum run of two hours. These seals were a conventional chevron cross section, but made of a proprietary high temperature binder reinforced with either copper wire glass fiber. After the sintered graphite back-up rings fractured in the first two tests, bronze back-ups were used, but the seal's basic rigidity hindered them from establishing contact with the shaft and holding pressure; at best, there was a large constant leak.

The graphite seal concept got a final test (052) but was no more encouraging than before. The Grafoil seals tested earlier were manufactured by winding a Grafoil ribbon on a mandrel and then pressing it into a chevron shape (Figure 15). This method not only gave anisotropic thermal conductivity, but increased the potential intralaminar leakage paths.

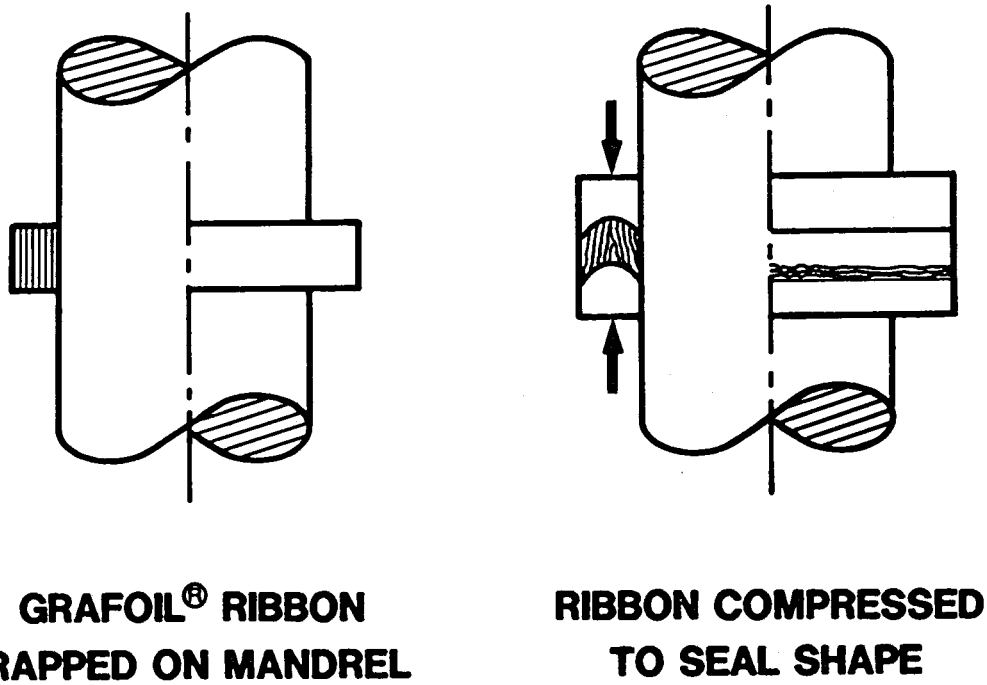

Figure 15. Formation of Grafoil Seal on Mandrel

The seals in test 052 were made of rings cut from Grafoil sheet and laminated in the direction perpendicular to the previous seals. This procedure did not improve the performance, since the seals failed from graphite loss in less than four hours, even with the use of a flexing leaf ZCB.

The most successful heat-resistant seals tested were those made of HTCR (High Temperature Corrosion Resistant) elastomer, a proprietary product of Utex Industries. HTCR is based on the Aflas (a product of Japan's Ashai Glass Co.) copolymer of tetra-fluoroethylene and propylene reinforced with glass fabric and synthetic aramid. The compound is molded into a basic chevron shape (Figure 16) that can be used either singly or in multiple seal packs.

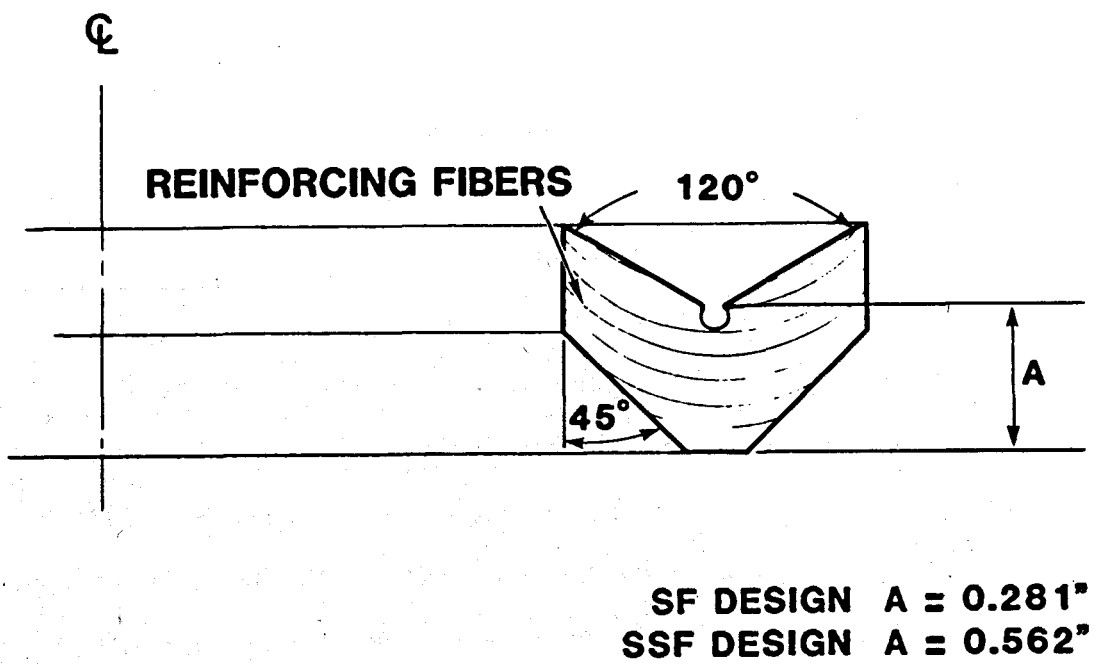

Figure 16. HTCR Seal

The first test (040) with this material lasted 53.3 hours, which was the longest test until that time. Aside from the length of run, two other phenomena were observed for the first time on this test. First, the temperatures reached sustained levels of 450+° at the shaft thermocouple (implying near 700° at the shaft/seal interface) but there was little thermal degradation of the elastomer. Second, the failure mechanism was a groove worn into the shaft surface rather than deterioration of the seal itself. To determine the repeatability of this result, the setup was duplicated as closely as possible for test 046. That test ran 71.8 hours and again failed because the shaft was worn to a depth that couldn't be accommodated by the seal lip flexure. This was much better repeatability than we had ever seen before, but the 165 hour Variseal test had occurred between the two HTCR tests and our focus was temporarily shifted away from the HTCR.

Several more HTCR tests are described in Section X, but to preserve some chronological continuity the next section describes an effort to use a scientific approach to failure analysis.

IX. CONTRACT TO FAILURE ANALYSIS ASSOCIATES

Until this fairly late stage of the program, the analysis of failed seals was based on the obvious macroscopic defects in the seal and on the extensive experience of several program participants. Although this method was perfectly adequate in many cases, the hope of understanding nonrepeatable tests and of making rational specific design changes led us to place a contract with Failure Analysis Associates (FAA) of Palo Alto, CA. Their tasks could be simply described as examining the failed seals, defining the failure modes, and suggesting design changes to cure them. These tasks were no different from previous effort, but FAA was experi-

enced in applying chemical, microscopic, and theoretical analysis to the procedure.

FAA examined at least one failed seal from each major group tested until that time. Many of their conclusions on the earlier seals have been incorporated into this report's descriptions of the failure modes. Much of their effort, at Sandia's direction, was devoted to extensive failure analysis and redesign of the Variseals.

To recap, five tests were done on the original design Variseal: the first two failed quickly because of large gaps between the shaft and backup rings, the third one ran almost 165 hours, and the last two (which were efforts to duplicate the third) failed in ten hours and one hour, respectively. The major question was, then, why did the three seemingly identical tests have such different results.

The failures in all the tests were cracks either through the heel or through the side of the seal (Figure 17). Because these seals had come from different batches of raw material, there was some suspicion of defective processing but no evidence of this could be found. In fact, no conclusive evidence of the failure cause was established but the most probable factors were extrusion of the seal material and excessive shear forces. Extrusion into the gap between the shaft and backup rings is harmful because: loss of seal material causes the lip to be thinner and more easily cracked. As the material extrudes at the heel the inside fillet becomes more of a sharp corner, which encourages cracks to begin, and filling the gap with material may raise the torque and therefore the temperature. Two possible reasons for high shear forces were also discussed: lubricant might flash at local high temperatures, causing sticking; and thermal expansion of the seal might tend to jam it between

the shaft and housing. The coefficient of thermal expansion for the seal is about ten times that of the metal enclosing it, and calculations showed that if the seal was heated much faster than the vessel there could be a lateral pressure of 2000 psi between the sides of the seal and the shaft and/or housing. These shear forces between the inner and outer lips would clearly tend to cause cracks in the seal.

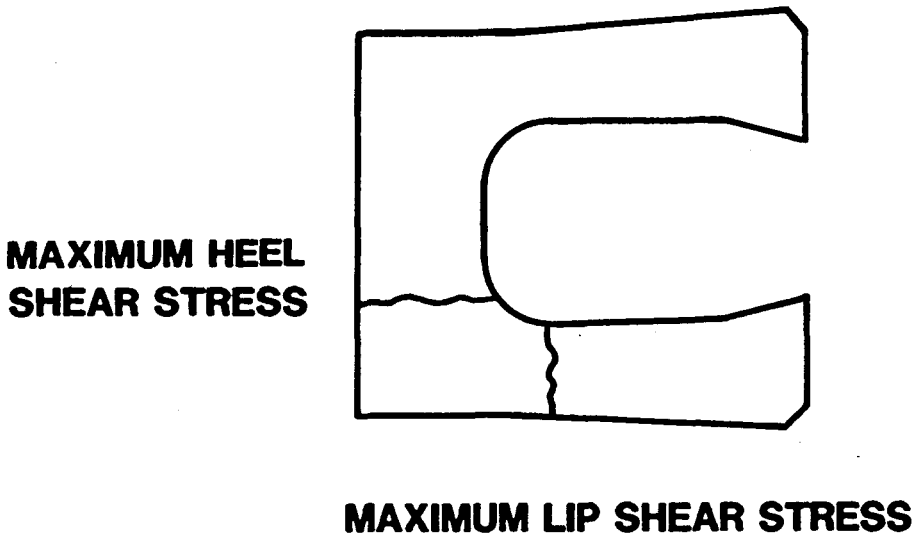

Figure 17. Variseal Failure Modes

To alleviate these problems, FAA proposed a second generation Variseal (Figure 18) with the following design changes:

-- Minimize extrusion by making a sharp corner on the backup ring

-- Strengthen the seal by increasing the seal heel thickness and using the spring to tie the inner and outer lips together

-- Reduce shear loads by increasing the diametral clearance at the heel, using a weaker internal spring, and using Pacer high temperature lubricant.

Seals with these features were built and tested--the results are discussed in Section X.

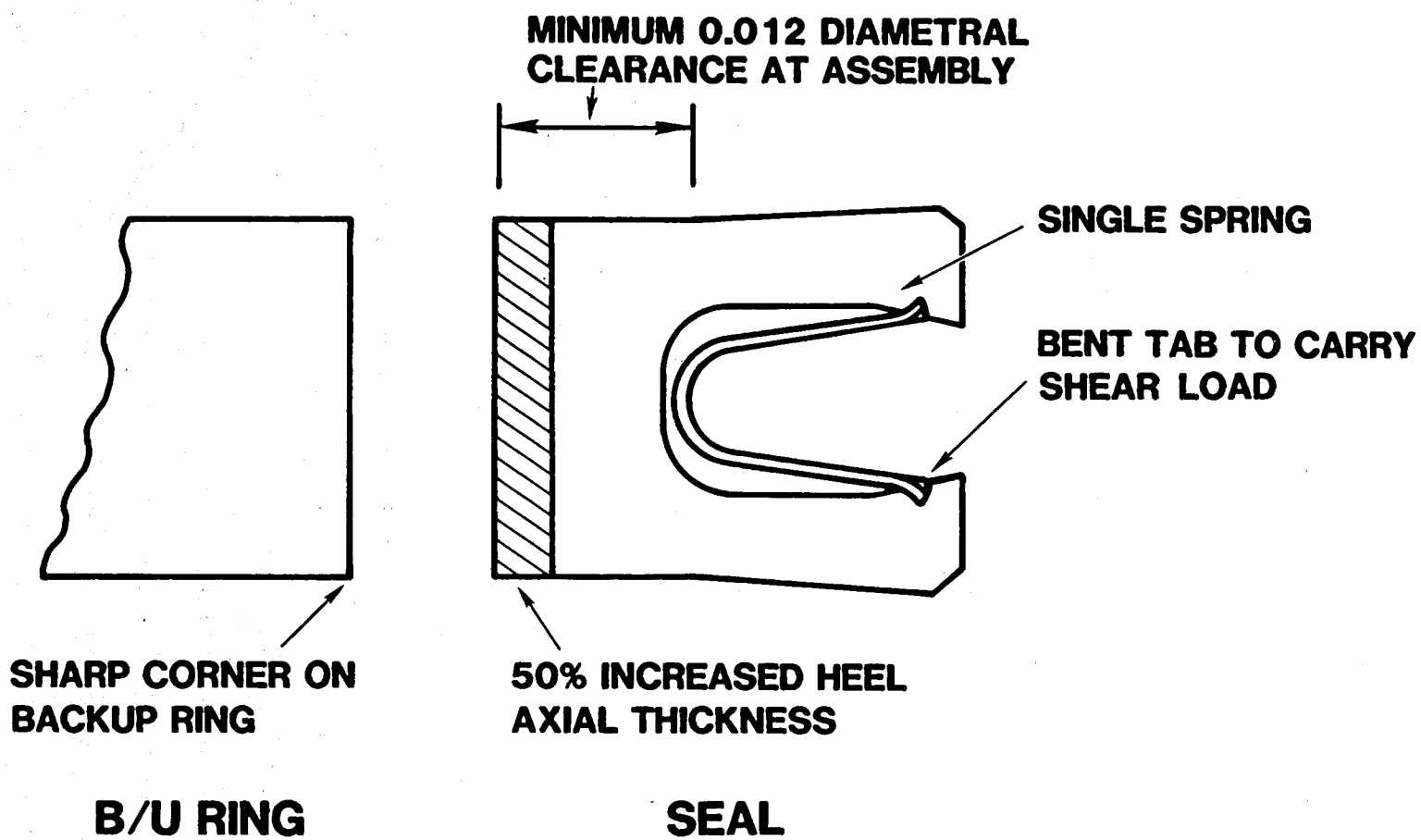

Figure 18. Variseal Design Improvements

It is somewhat difficult, even with hindsight, to assess the value of this failure analysis. Although the test data is limited, it appears that FAA's definition of failure modes was reasonable and their Variseal design changes were valid. If the actual benefit to the program was small, it was primarily because this activity was near the end of the work instead of being done more appropriately near the beginning. In general, the relatively low cost of this contract (about 10% of that year's test budget) appears to have been very worthwhile.

X. CONCLUDING TESTS IN THE STM (1981)

The tests described in this section involve either HTCR elastomer seals or second generation Variseals.

In an effort to solve the shaft wear problem of earlier HTCR tests, two changes were made to the previous setup. At the suggestion of Utex Industries the shaft surface was changed from chrome plate to carburized 9310 steel. Since the earlier runs indicated high temperatures at the shaft/seal interface, the lubricant was changed to the Pacer PLX-014 described in Section III (d). The chemistry of this lubricant holds up well at high temperature, but its viscosity was made high for better performance as a bit lubricant. The series of four tests labeled 054 had a common failure mode that was apparently an effect of that high viscosity. The seal rings, backup rings, and spacer/adapters are in a stack that is normally held in alignment by the axial force of the vessel closure (see, for example, Figure 8). In these seal tests, however, the lubricant's high viscosity prevented it from properly wetting the shaft/seal interface and the resulting friction caused the adapters, backup rings, and seal rings to spin relative to each other. This relative motion caused rapid leaks, with none of the four tests lasting longer than 17 hours.

More lubricant with the PLX-014 chemistry was mixed, but this batch had a lower viscosity similar to the Texaco EP85-90 that had been used in all the tests up to 054. Using a combination of the carburized steel shaft sleeve, the low viscosity lubricant, and a seal pack of two HTCR rings, test 055 ran for 200 hours with no seal failure. It appeared, in fact, that the test could have gone considerably longer since one of the seal packs had only leaked about half its lubricant and the other had leaked about a quarter.

This result was so encouraging that a series of tests was next done with drilling mud on the low pressure side of the seal. These tests introduced several new problems, at least some of which were caused by changes in the configuration of the Seal Test Machine. Until this time all tests in the STM had been run with the high pressure injection between the seals (Figure 3). To minimize the exposure of STM parts to mud, however, the seal direction was reversed so that the high pressure was applied from the ends and the lower pressure mud was between the seals. This meant that, instead of the "face-to-face" arrangement used before, the seals were now in a "back-to-back" configuration (Figure 19).

Three tests were done with the mud injection system and with a lower ΔP of 1000 psi. Failures were at times ranging from 8 to 42 hours and all were caused by a combination of seal lip wear and seal assembly rotation. Utex Industries' analysis of the failures was that the back-to-back seal arrangement caused uneven loading and therefore rapid wear and high torque at the seal. This analysis was primarily based on their past observations of other back-to-back seal applications. Since we also suspected that the failures were associated with the abrasive-laden mud, we tried to separate the effects by running the back-to-back seal config-

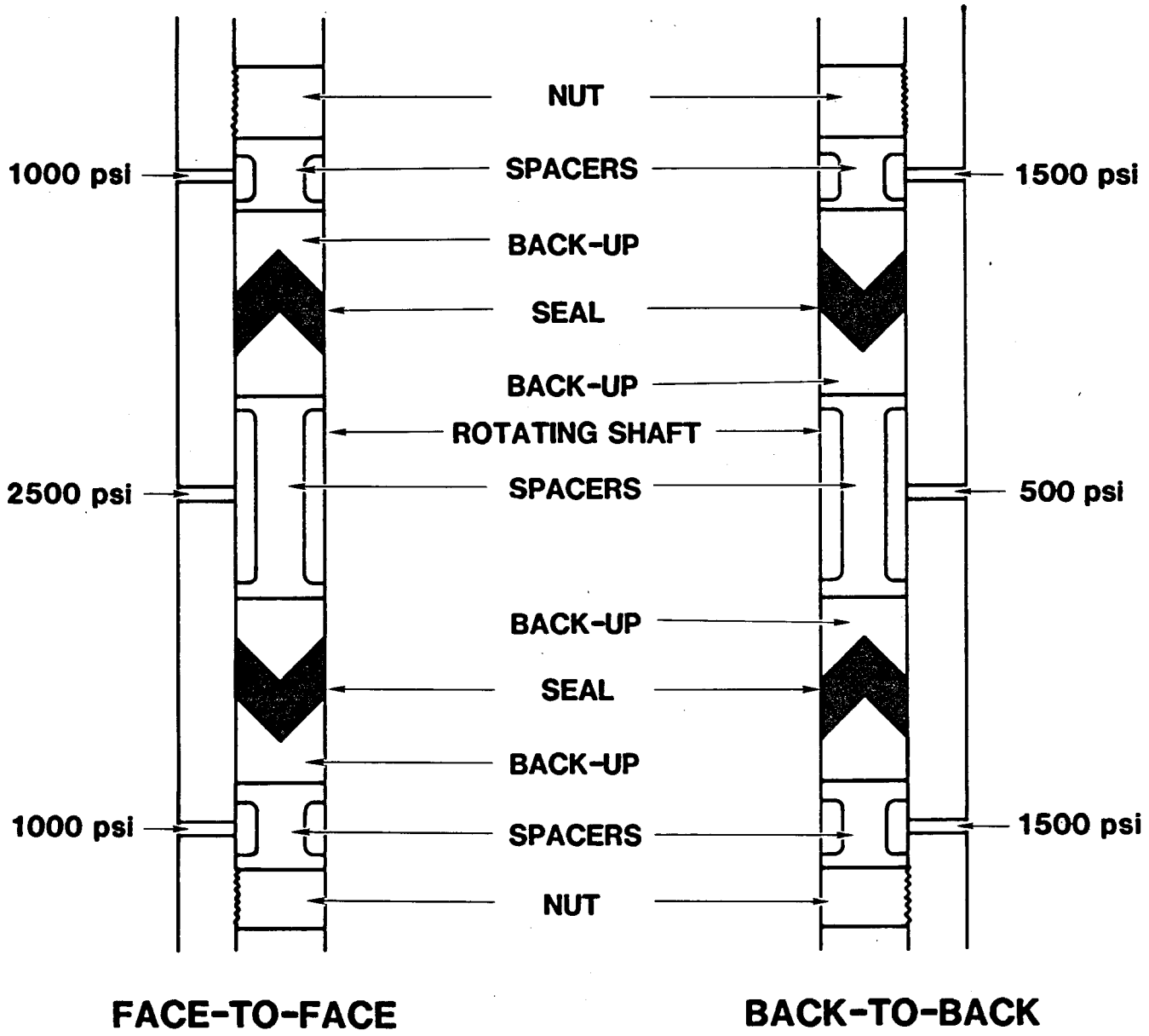

Figure 19. Seal Arrangement in the STM

uration with oil instead of mud on the low pressure side. These tests were inconclusive, one lasting 16 hours and the other 74 hours, because the failure modes were still related to adapter rotation. An established seal/shaft/lubricant combination did not last as long as expected, especially at the 1000 psi pressure drop, thus giving credibility to the idea of seal configuration causing failure. On the other hand, the tests with oil on both sides of the seal averaged longer lives than with mud on the low pressure side, so it seems that the abrasive mud was at least a contributing factor in the failure.

Unfortunately, it appears that this question will remain unresolved, because the testing budget was very limited at this point in the program. Since the second generation Variseals described in Section IX were available, they were chosen for the final tests in the STM.

The first Variseal II test used a 4140 steel backup ring, a shaft sleeve with a tungsten carbide coating, and the seal assembly shown in Figure 20. The run was ended at 2.5 hours when a high leakage rate began. After disassembly the steel backup ring was seen to have severely galled the shaft, leading to a severe leak. The next test was identical, except for using a new shaft and a bronze backup ring. This run was ended at 100 hours, having leaked about 20% of its lubricant, because no more testing time was available. Post-test inspection showed no discernable wear on the anti-extrusion ring, and evidence that the seal and anti-extrusion ring had spun relative to the backup ring. Since the leak rates were low and relatively constant until the 100 hour mark, it is not farfetched to expect this combination to last for 200 hours. Even if true, that would imply nothing about the seal's performance with mud. This question, too, will remain unresolved but any future work should

consider the Variseal II as a leading candidate for further development.

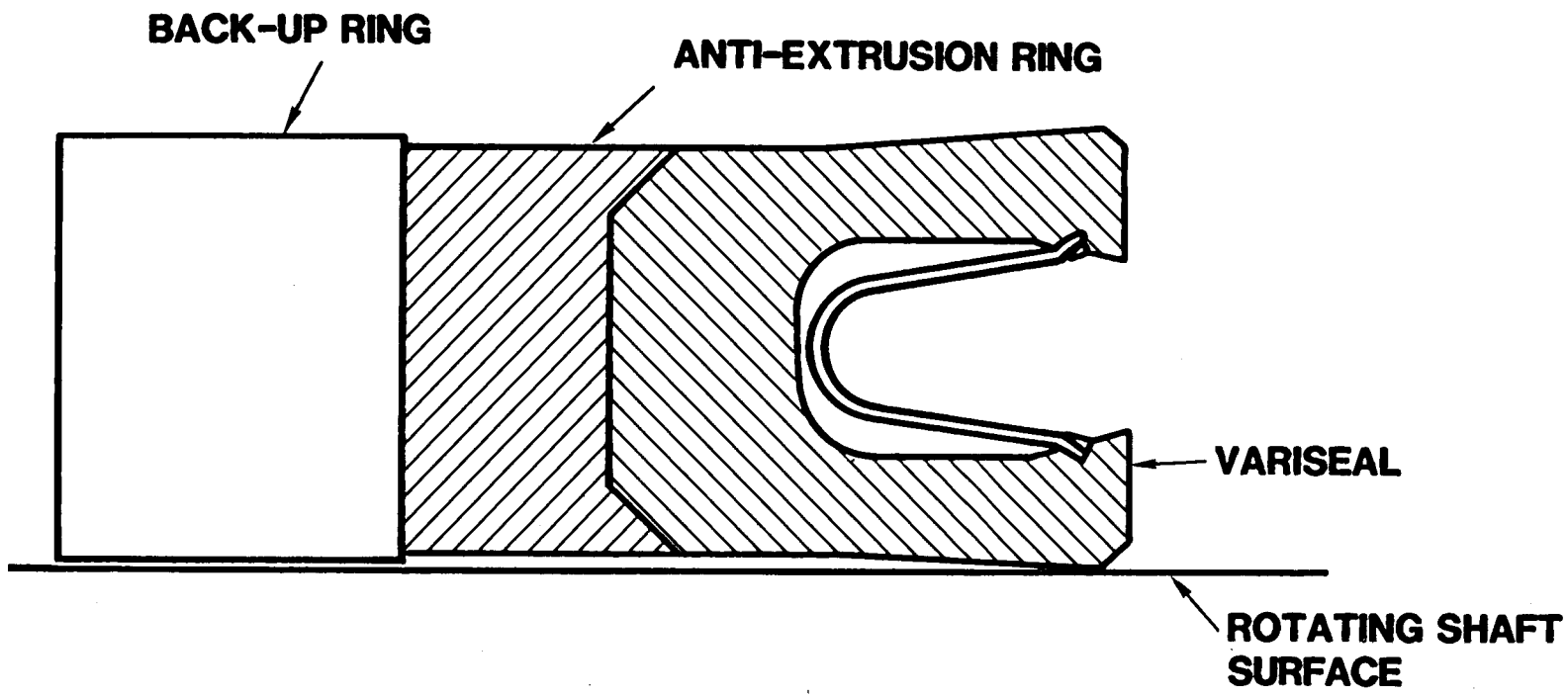

Figure 20. Second Generation Variseal

XI. FULL SCALE TESTS IN THE BEARING/SEAL PACKAGE TEST FACILITY

A. General

The BSP Test Facility (BTF) was designed to allow realistic tests of a full-scale, field-usable bearing/seal package. The BTF is described in Section III-C.

Full-scale testing served three major purposes: (1) to apply more realistic tests to the best candidates from the STM screening; (2) to evaluate seal designs that were difficult or impossible to test in the STM; (3) to debug the BTF and to reveal design problems in the BSP that would not be apparent in the STM tests.

Twelve tests were performed on candidate seals after three de-bug tests were used to validate the BTF (see Appendix B for test summary). The twelve tests were divided among HTCR chevron seals, second generation Variseals, and mechanical face seals.

The major problems in these tests seemed to center on the BSP floating piston (see Figure 1 and Section III-A for a description). Since this seal had near-zero pressure drop, its design was originally not considered to be difficult, but all the floating piston designs used in the twelve tests were either unsuccessful or tested for such a short time as to remain unproven. The floating pistons were of two basic designs: a molded, one-piece, bi-directional seal made of HTCR (Figure 21) and a carrier assembly that used individual Variseals on inside and outside diameters in both directions (Figure 22). The molded piston was susceptible to wear on the inside lip which allowed mud to pass the seal into the bearings. The leakage mode was not as obvious on the Variseal piston since the seal showed little wear. The most likely mechanism was poor seal/surface contact on the outside diameter; this was a result of

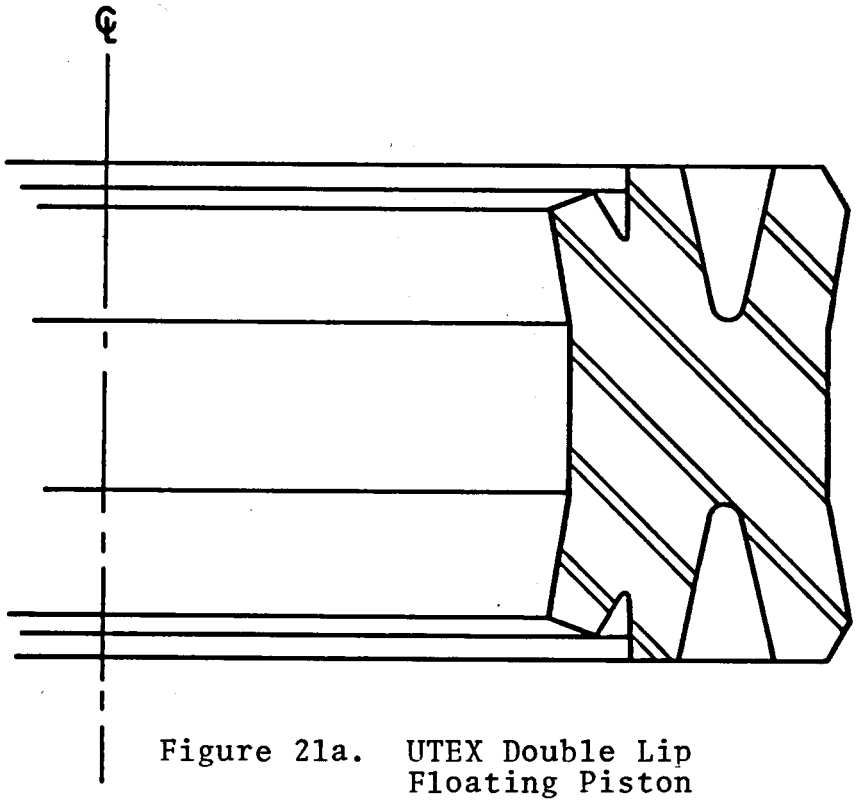

Figure 21a. UTEX Double Lip Floating Piston

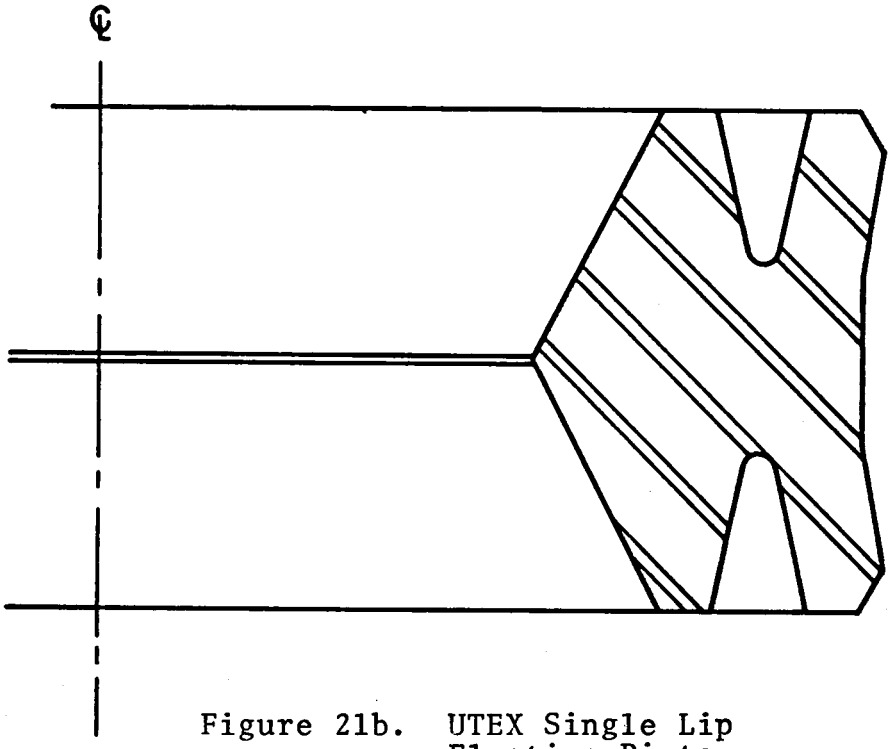

Figure 21b. UTEX Single Lip Floating Piston

corrosion and pitting in the BSP outer housing. A majority of the tests ended because of mud in the bearings, so those pressure seal assemblies could not be judged on their suitability for use in the BSP. The only clear-cut results were the early failures of the mechanical face seals.

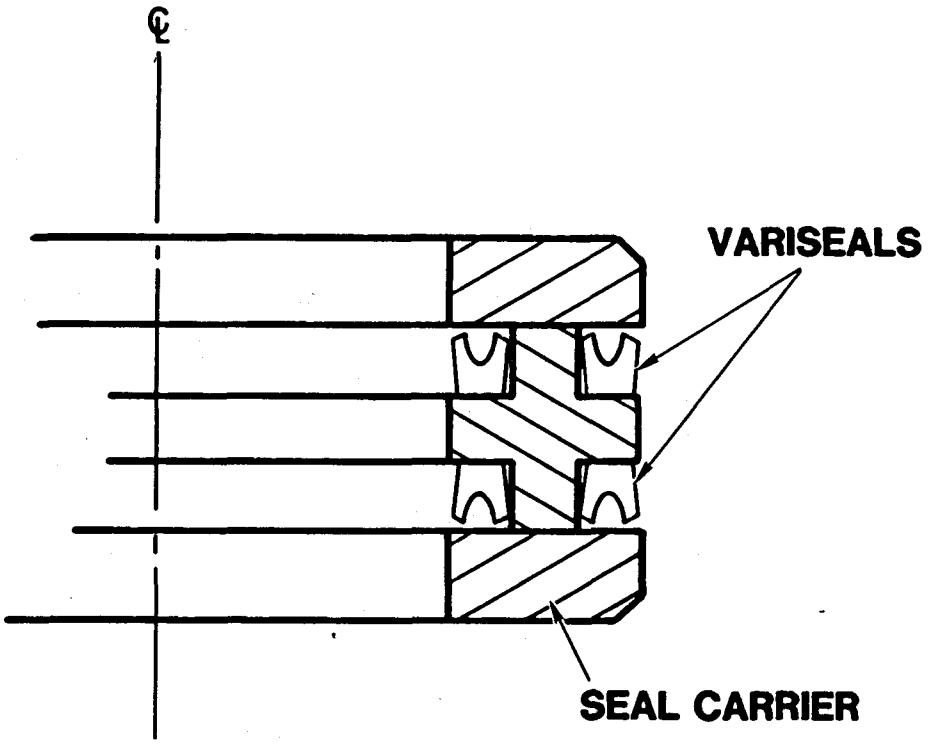

Figure 22. Variseal Floating Piston

The handicap of mud leakage past the floating piston was aggravated by the difficulty of knowing when the leakage occurred. In most cases the piston was found at the end of its travel, with mud below it in the bearings, but there was nothing to show when during the test the piston moved. The mud in the bearings was detected by an increase in the torque required to turn the BSP shaft but it is possible that some of the torque increase was caused by mud in the seal, which would have generated an unrealistic amount of seal wear.

The Variseals and the HTCR elastomer pressure seals used in the BSP were identical to those tested in the STM, so they are not described in

detail here. The mechanical face seals had not been tested before because they would not fit in the STM, so they are described below.

B. Mechanical Face Seals

The principle of face seal operation is shown in Figure 23. The key points in this type of seal are: (1) the sealing surface is the contact area between two flat annular faces, one of which rotates with the shaft and one of which is stationary with respect to the tool housing; (2) for a given pressure drop, the force holding the seal faces together depends on the pressure distribution across the faces, the geometry of the seal rings, and sometimes a spring in the seal assembly; (3) since the sealing surfaces are usually made of metal or ceramic, they are much less vulnerable to high temperature than elastomers.

The seal faces are held together by the pressure on the seal rings (and usually by a weak spring in the assembly). By changing the radius of the static seal relative to the seal face (on the high pressure and/or the low pressure side), the forces acting on the seal ring due to the pressure drop can be adjusted in a predictable way. The pressure distribution across the sealing surface, however, is not well defined. For simplicity, it is frequently assumed to vary linearly from the high pressure at one edge to the low pressure at the other, but there are several theories and some experimental data to indicate that the situation is more complex than this. The importance of all this lies in the necessity for a seal design compromise that will not produce excessive force (and thus heat and wear) but will produce enough force to keep the faces closed under all conditions so that abrasive particles will not invade the sealing surface. For the drilling motor application this problem is complicated even further by the axial vibration of the drill bit motion

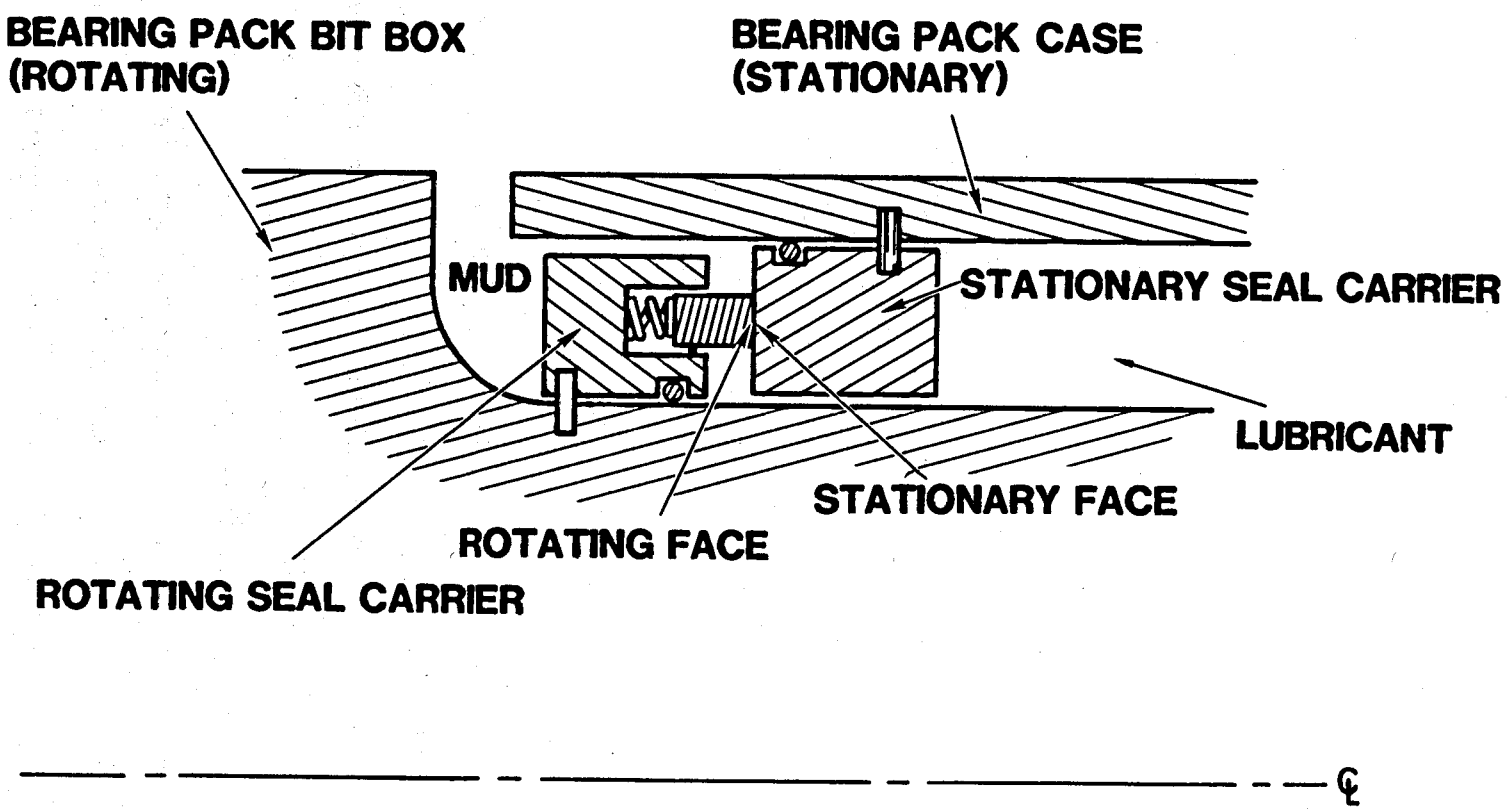

Figure 23. Schematic of Mechanical Face Seal

and by the fact that the pressure drop direction may change during the drilling cycle. (During normal operation, pressure is higher in the tool than in the annulus, but with no circulation the swabbing pressure may reverse this.)

This brief and oversimplified discussion of face seal design shows why we tried to find face seal manufacturers with experience relevant to drilling motor seals. Four such manufacturers were contacted, and contracts for seals were placed with two of them--Gits Brothers and Stein Seal Company.

The Stein seal design used the hard face/soft face concept in which scratches caused by abrasives would be in the face made of softer material and would then be polished out by rotation of the hard material in the opposing face. Test BSP-010 used one of these seals and ended after approximately 8 hours when the seal assembly would no longer hold pressure. The BSP was disassembled and the seal inspected--the softer face material had completely disappeared. Since this seal design offered no sign of encouragement, no further tests were done. Stein Seal Company was informed of the test results, but they made no suggestions for alternative seal designs.

The Gits Brother seal used hard material for both seal faces--it was tested in three different versions. The first attempt to test the seal ended before it ever started because of the seal's inability to hold static pressure. Examination of the seal and consultation with Gits revealed a misunderstanding of the way pressure was to be applied to the seal, resulting in a design that would not hold internal pressure. One of the seal rings was made from a ceramic material that is strong in compression but weak in tension, and this ring cracked when it was loaded in

tension by the internal pressure. The second Gits design used a revised seal ring geometry with metal rings carrying hard facing on the sealing surfaces. This design operated for 6.5 hours before failing; seal disassembly showed that the hard facing had worn through and the substrate was too badly eroded to hold pressure. The first Gits design used the same seal ring geometry as the second but the seal rings were made of solid tungsten carbide. This seal assembly operated for 24 hours and was still holding pressure when an increase in BSP torque was measured. The floating piston had failed and allowed mud in the bearings. There was some noticeable wear on the seal faces but this may have occurred after mud got into the bearings and thus on the high pressure side of the seal.

The results of these tests were inconclusive in evaluating mechanical face seals for drilling motor use. The fact that seals failed quickly does not necessarily imply that a face seal cannot be designed to work properly under the specified conditions. Face seals still offer the potential of long life relatively unaffected by high temperature, but they face the major obstacles of high cost and design problems that are not understood well, if at all.

XII. CONCLUSIONS AND HINDSIGHT

The objectives of this section are to assess the experiences and results of the program and, from that, to offer conclusions about what we learned and to suggest areas that other investigators should either pursue or avoid.

The basic approach of screening seals in a unique machine with a leakage failure criterion and then moving toward full-scale tests in the laboratory or the field still appears to be valid. The execution of this plan could have been more effective, however, if certain parts of it had

been done differently. Those parts chiefly involve the test equipment design, the choice of seals to be evaluated, and the failure analysis of the tested seals.

The three major pieces of test equipmment (STM, BSP, and BTF) had design characteristics that did not necessarily give misleading results, but that made the results more difficult to interpret. During the test program, all of the machines were modified to correct deficiencies that did not require major redesign. The remaining features are those that should be considered by anyone planning a machine of the same kind.

The STM would have provided more useful information if it had had torque measurements for the individual seals and if the thermocouples had been placed nearer the shaft/seal interface. The torque and temperature values actually measured are good averages, but the improved instrumentation would have shown more about rapid fluctuations that might be correlated with each other and the leak rate to give a better understanding of the failure process.

Redesign of the BSP would probably have had the most beneficial effect of any hardware change. As discussed in Sections III and XI, the BSP has two major impediments to data collection--lack of information on floating piston performance and lack of temperature measurement anywhere near the shaft/seal interface. These problems would not have been so acute if the floating piston had worked well, but its consistent failure aggravated what might otherwise have been minor shortcomings. The problems are also a consequence of a decision early in the program to trade instrumentation sophistication for the realism of a field-usable Bearing/Seal Package. Again, this decision turned out poorly because of the difficulties with the floating piston, so the obvious summation of

recommendations for the BSP is to redesign or eliminate the floating piston. By having a flexible bellows or diaphragm in the annular space between the rotating shaft and the outer case, the sealing problem could be reduced to that of a nontranslating, low-pressure rotary seal. The redesign could also incorporate a method for signalling when the lubricant was expended and a method for measuring temperatures nearer the shaft/seal surface.

The lack of high-temperature capability in the BTF was not a serious operational handicap because the runs were not long enough for hot fluid to become a significant factor in the seal life (see Section III-C.). If the BSP redesign were successful, then curing the BTF's high temperature problems would become important.

The choice of seals to test and the analysis of failed seals are directly related, since the latter frequently influences the former. Until late in the program (see Section IX) the analysis of failed seals was based primarily on macroscopic examination or theoretical calculation. The pronounced unrepeatability of the early tests strongly indicates that there were failure processes which were not seen at the scale of our investigation. It is not guaranteed that a more rigorous examination will clearly define the failure modes and causes of unrepeatable tests, but it does seem that a more thorough look at the failed seals would have led to a more systematic selection of seals to be evaluated subsequently. This effort seems especially worthwhile when the relatively modest cost of the failure analysis is compared to the cost of testing the seals.

Despite the preceding catalog of things that could or should have been done differently, the program produced a number of useful conclu-

sions and generated much unique information. There is now a large base of raw data concerning seal temperatures and leak rates versus time for a wide variety of seals. Seal materials and designs that are promising candidates for further development have also been identified. The most important specific conclusions from this program fall into the following areas:

- Seal Design - The seal, shaft surface, and lubricant must be considered as a system. Perhaps this is obvious, but when the performance of one of these items is discussed, then remember that the performance of the complete system is implied. With this qualification then, the best seals tested were the HTCR chevron seal by Utex Industries and the Variseal by American Variseal Company, when these were run with a carburized steel shaft and a tungsten-carbide coated shaft, respectively. The chevron shaped HTCR seal also performed better when only one or two rings were used in the stack. When three rings were used, there seemed to be poor lubrication and excessive wear of the center ring. Some industry experience indicates that a single lip seal with additional body material (such as the Utex double-length SSF design) is the optimum arrangement, but our experiments did not make this direct comparison.
- Lubricant - The high temperature (~700°F for many hours) at the shaft/seal interface in some tests indicate that a synthetic lubricant will be necessary for those seal designs. The Pacer PLX-014 lubricant (commercialized by Pacer Industries as DHT-90G) was the best one tested in this program. This lubricant ran in one seal test for 200 hours at high temperature with almost no sign of chemical degradation, however, its load bearing properties in a real

bearing package under these conditions are still unproven.

- Bearing/Seal Package - In the course of de-bugging runs and seal tests, the BSP was operated for a total of about 300 hours. Except for the problems with the floating piston, the BSP worked very well. It was disassembled many times for the installation of various seals, and there were few signs of deterioration during this process. Field use of a unit similar to this, but with mud-lubricated bearings, also indicates that the design is structurally sound.

In conclusion, I believe that this work did advance the state of knowledge in rotary seal design--particularly as applied to geothermal drilling motors--and that there are clear objectives if this program is ever resumed.

APPENDIX A -- Summary of Tests in the Seal Test Machine

--1978--

Test	Seal Type	No. of Rings	Back up/ Clearance, in	Shaft Finish μin, rms	Duration, hours	Failure Mode	Notes
001	Elastomer, 701	3	Buna N/Orig.	16	52.7	Slow, constant leak	a
002	Elastomer, 701	3	Buna N/Orig.	16	28.5	Faster leak beginning after temp. spike-7 unplanned stops during test	a, b
003	Elastomer, 42D	3	Buna N/Orig.	16	20.4	General wear, sudden leak	a
004	Elastomer, 42D	3	Buna N/Orig.	16	13.1	Sudden failure after 350°+ temperature spike	a
005	Elastomer, 42D	3	Buna N/Orig.	16	5.5	Sudden failure, seal appeared to seize shaft	a
006	Elastomer, 42D	3	Buna N/Orig.	16	24.2	Sudden failure, 350°F for first three hours	a
007	Elastomer, 42D	3	Buna N/Orig.	16	3.1	Sudden failure	
008	Elastomer, 701	2	Brass/.010	17	18.2	Sudden failure, elastomer hardened @ 300°+	
009	Elastomer, 701	2	Brass/.010	16	3.5	Sudden failure, no unique feature	
010	Elastomer, 701	2	Brass/.010	12	10.3	Sudden leak after 390°F	
011	Aborted, No						
012	Test						
013	Elastomer RD181	1	Brass/.010	12	11.3	High frict. coeff. gave high temp--backup allowed seal extrusion (013 and 014)	
014	Elastomer RD181	1	Brass/.010	12	8.6		
015	Elastomer, 701	1	Brass/.010	12	5.5	Sudden catastrophic leak	
016	Grafoil/BeCu	5	Brass/.010	12	17.5	Grafoil separated from beryll. copper leaves and was washed from seal cavity(016 and 017) Shaft was removed and replaced 3 times during 016	
017	Grafoil/BeCu	5	Brass/.010	11	9.9		

APPENDIX A -- Summary of Tests in the Seal Test Machine

Test	Seal Type	No. of Rings	Back up/ Clearance, in	Shaft Finish μin, rms	Duration, hours	Failure Mode	Notes
				--1978--			
018	Elastomer, 701	3	Brass/.010	16	1.2	Three rings @ 412 RPM gave high temp quickly	
019	Graphite/Metal Matrix	3	Alum-Bronze /.010	16	4.6	Massive migration of seal material (graphite)	
020	Graphite/Met Mtrx	1	AlBr/.010	13	13.1	Loss of graphite	
021	Grafoil/BeCu	3	AlBr/.002	17	5.9	Loss of graphite	
022	J-M Uneepac	3	AlBr/.003	17	10.6	Both Uneepac seals showed high wear and distortion in the inside diameter	
023	J-M Uneepac	3	AlBr/.015	17	26.6		
				--1979--			
024	Grafoil/BeCu	3	Flexing Lip .001	4	40.9	Loss of graphite, flexing lip wore	
025	Graphite/Met Mtrx	3	Teflon/Bronze .001	4-8	2.00	Test stopped because seal was damaged in handling	
026	Graphite/Met Mtrx	3	TFE/Br-.001	4-8	2.00	Graphite loss, probably backup ring failure	
027	Graphite/Met Mtrx	3	Flex Lip/.001	4-8	23.5	Graphite loss; internal frac in seal rings (leakage paths)	
028	Grafoil/Brass	3	Flex Lip/.001	4-8	2.9	Seals damaged by removal and replacement of shaft	
029	Grafoil/Brass	3	Flex Lip/.001	4-8	3.2	Test ended by STM failure	
030	Elastomer, canted	2	AlBr/.008	4-8	0	Seals and back-up rings rotated in housing; would not hold pressure (030 and 031)	
031	Elastomer, canted	2	AlBr/.008	4-8	0		
032	Graphite/Met Mtrx	3	Flex Lip/.001	4-8	8.6	Graphite loss, internal fracture	

APPENDIX A -- Summary of Tests in the Seal Test Machine

Test	Seal Type	No. of Rings	Back up/ Clearance, in	Shaft Finish μin, rms	Duration, hours	Failure Mode	Notes
				--1978--			
033	Elastomer, canted	2	AlBr/.008	4-8	0.7	Seal lip torn (parts pinned together to prevent rotation)	
				--1980--			
034	Grafoil/Phos. Brnz	3	Flex leaves 3 ea. .031/.001	4-8	3.5	Flexing leaves probably too stiff	c, d
035	Grafoil/Phos. Brnz	3	Flex leaves 4 ea. .016/.001	4-8	32.3	Flexing leaves wore groove in shaft	
036	Elastomer, canted	2	AlBr/.008	8-12	0	Seal had shrunk (possibly by temperature) wouldn't hold initial pressure	
037	Grafoil/Phos. Brnz	3	Flex Lip/.001	4-8	0	Back-up ring seized shaft when pressurized	
038	Graphite/Elastomer Hybrid	2E 1G	Bronze/.016	8-12	8.0	Serious material loss from graphite rings in both tests. Mat'l loss from elastomer ring in 038	
039	Grafoil/Elastomer Hybrid	2G 1E	Flex leaves 4 ea. .015/.001	4-8	3.8		
040	Elastomer, HTCR	3	Brnz/.016	8-12	53.3	Groove worn in shaft too deep for seal to compensate	
041	Variseal	1	Brnz/.063	8-12	5.3	Excessive clearance in back-up ring allowed seal extrusion (041 and 042)	
042	Variseal	1	Brnz/.063	8-12	4.3		
043	Copper Wire/Binder	3	Sintered graphite/.008	4-8	0.8	Sintered graphite back-up rings cracked	
044	Glass Fiber/Binder	3	Sint grph/.008	4-8	0		
045	Variseal	1	Brnz/.005	8-12	164.8	Seal extruded through groove worn in shaft	
046	Elastomer, HTCR	3	Brnz/.016	8-12	71.8	Groove worn in shaft	
047	Variseal	1	Brnz/.005	8-12	10.3	Crack through seal heel	
048	Elastomer, HTCR	2	Brnz/.016	8-12	6.7	Wear on seal ID	

APPENDIX A -- Summary of Tests in the Seal Test Machine

Test	Seal Type	No. of Rings	Back up/ Clearance, in	Shaft Finish μin, rms	Duration, hours	Failure Mode	Notes
					--1978--		
049	Copper Wire/Binder	3	Brnz/.016	4-8	0	Seals were too rigid to flex and form seal (049 and 050)	
050	Glass Fiber/Binder	3	Brnz/.016	4-8	2.0		
051	Elas (HTCR), canted	2	Brnz/.008	8-12	0	Seal lips damaged by installation	
052	Grafoil/Phos Brnz	3	Flex Leaves 4 ea .016/.001	4-8	3.7	Severe graphite loss	c, f
053	Variseal	1	Brnz/.005	8-12	0.9	Crack through seal heel	
					--1981--		
054	Elastomer, HTCR	2	Brnz/.005	8-12	16.7	High friction in all 054 tests caused seals and adapters to rotate in the seal gland. The cause was apparently inadequate lubrication by the high viscosity lube	g, h
054A	Elastomer, HTCR	2	Brnz/.005	8-12	9.2		g, h
054B	Elastomer, HTCR	3	Brnz/.005	8-12	1.0		g, h
054C	Elastomer, HTCR	1	Brnz/.005	8-12	7.8		g, h
055	Elastomer, HTCR	2	Brnz/.005	8-12	200	None	g, i
056	Elastomer, HTCR	2	Brnz/.005	8-12	8.3	Seal assembly rotated	g, j, k
057	Elastomer, HTCR	2	Brnz/.005	8-12	41.8	Wear on seal lip	g, j, k
058	Elastomer, HTCR	1	Brnz/.005	8-12	19.0	Wear on seal lip	g, j, k, m
059	Elastomer, HTCR	1	Brnz/.005	8-12	16.0	Adapter rotated during test	g, i, k, m
060	Elastomer, HTCR	1	Brnz/.005	8-12	74.0	Adapters rotated during test	g, i, k, m
061	Variseal II	1	Steel/.005	8-12	2.5	Back-up ring galled shaft	i, n
062	Variseal II	1	Brnz/.005	8-12	100	No failure--only 20% of lubricant expended	i, n

Unless superseded by a "note", all seal tests at these conditions:

Rotary speed - 412 RPM
ΔP - 1500 psi
Shaft sleeve coating - chrome plate, ground to diameter
Lubricant - Texaco EP 85-90

Appendix A Notes

a - 211 RPM

b - 1400 psi ΔP

c - Flexing leaf clearance was .001, back up ring clearance was .170

d - High leak rate at 1500 psi ΔP. Leak rate much lower at 1750 psi ΔP.

e - One seal ring was homogeneous, the other was fabric reinforced.

f - These seals had the Grafoil lamination direction perpendicular to that in previous Grafoil seals.

g - Shaft sleeve is carburized steel.

h - High viscosity Pacer lubricant on both sides of seal.

i - Low viscosity Pacer lubricant on both sides of seal.

j - Low viscosity Pacer lube on high pressure side, mud on low pressure side.

k - 1000 psi ΔP

m - The seal ring is twice as long as normal.

n - Shaft sleeve coated with tungsten carbide UCAR-LW1N30

APPENDIX B -- Summary of Tests in the Bearing/Seal Package

Test ID	Pressure Seal Assembly	Floating Piston Assembly	Test Duration, hr	Failure Mode	Notes
001	3 Rings, 701 Elastomer	Bronze piston-Chevron seals OD, UNEEPAC ID		001 and 002 were debug tests ended by test facility failure	
002	3 Rings, 701 Elastomer	As above			
003	3 Rings, 701 Elastomer	As above	5	No failure, test was run to measure temperature	a, b
004	2 Rings, HTCR Elastomer	1 piece, molded HTCR double lip ID	31	Floating piston failed, allowing mud in bearings	
005	Gits Bros. Face Seal	As above	0	Face seal cracked during initial pressurization due to faulty design	c
006	2 Rings, HTCR Elastomer	As above	6	Seal adapter sheared alignment pin, causing tool seizure	
007	1 Double Height HTCR Ring	Variseals in ryton carrier	51	Floating piston failed	
008	Gits Bros. Face Seal II	1 pc molded HTCR single lip ID	6.5	Tungsten carbide coating worn off seal faces	c
009	1 Double Height HTCR Ring	As above	4	Floating piston failed, ID completely worn away	
010	Stein Face Seal	As above	8	One seal face completely destroyed	c
011	1 Double Height HTCR Ring	One-piece molded reinforced HTCR, single lip	48	Mud in bearings; both pressure seal and floating piston worn	

APPENDIX B -- Summary of Tests in the Bearing/Seal Package

Test ID	Pressure Seal Assembly	Floating Piston Assembly	Test Duration, hr	Failure Mode	Notes
012	1 Double Height HTCR Ring	One-piece molded reinforced HTCR, single lip	46	Floating piston failure, ID lip worn away	e
013	Variseal II (without extrusion ring)	Variseal	48	Mud in bearings; source unclear because little wear on either seal	d, e
014	Variseal II (without extrusion ring)	Variseal	24	Mud in bearings; floating piston had not moved	e
015	Gits Bros. Face Seal III				c

Unless superseded by a "note", the BSP tests were at these conditions:

Axial Load - 10,000 lb nominal
ΔP - 1000 psi
Rotary Speed - 450 RPM
Back-Up Rings - SAE 660 bronze, .005 in diametral clearance
Pressure Media - Pacer 90G (low viscosity) lubricant on high pressure, mud on low pressure side
Pressure Seal Shaft - Carburized 9310 steel, 8-12 μin finish
Floating Piston Shaft - Chrome plate
"Pressure Seal Assembly" refers to sealing pressure in one direction; in the tests of non-face pressure seals there is one "P.S.A." in each direction

<u>Notes for Appendix B</u>

a Chrome plated pressure seal shaft
b ΔP = 900 psi, speed = 400 RPM
c Data on back-up rings and pressure seal shaft not applicable
d ΔP = 500 psi because of damage to BTF
e Floating piston shaft is carburized steel

Appendix C

Lubricant Test Results

Test* I.D.	Lubricant Manufacturer	Lubricant Number	Avg. Wear Scar Width (inches)	Nominal Load Bearing Capacity (psi)	Test Temp (°F)
32	Pacer	PLX-013	0.077	7,435	400
33	Pacer	PLX-013	0.080	7,155	
40	Pacer	PLX-015	0.108	5,277	
41	Pacer	PLX-015	0.098	5,816	
42	Pacer	PLX-011	0.102	5,588	
43	Pacer	PLX-011	0.075	7,600	
44	Pacer	PLX-011	0.083	6,895	
45	Pacer	PLX-014	0.070	8,143	
46	Pacer	PLX-014	0.064	8,860	
47	Pacer	PLX-014	0.057	9,942	
48	Pacer	PLX-010	0.092	6,218	
49	Pacer	PLX-010	0.094	6,064	
50	Schmierstoffe	Gleitmo 500	0.104	5,463	
51	Schmierstoffe	Gleitmo 500	0.147	3,878	
52	Schmierstoffe	Gleitmo 500	0.132	4,329	
53	API	BUC 5A2	0.114	5,000	
54	API	BUC 5A2	0.130	4,396	
55	Mavom	B5K	0.142	4,014	
56	Mavom	B5K	0.162	3,519	
57	Optimol-Olwerke	Optimoly White T	0.307	1,857	
58	Optimol-Olwerke	Optimoly White T	0.376	1,516	
59	Texaco	EP 85-90	0.260	2,190	
60	Texaco	EP 85-90	0.259	2,205	
61	Wooley Booger	Teflon Grease	0.204	2,990	
62	Wooley Booger	Teflon Grease	0.173	3,301	
63	Mobil	600W	0.137	4,171	
64	Mobil	600W	0.148	3,851	
65	Jet-Lube	Kopper Kote	0.136	4,181	
66	Jet-Lube	Kopper Kote	0.197	2,889	
67	Jet-Lube	Kopper Kote	0.136	4,181	
68	Watch	10:1	0.116	4,900	
69	Watch	10:1	0.165	3,448	
70	Tenneco	Anderol 456	0.167	3,406	
71	Tenneco	Anderol 456	0.185	3,087	
72	Watch	10:1	0.158	3,696	
73	Dow-Corning	710	0.576	900	
74	Dow-Corning	710	0.561	1,016	
75	Dow-Corning	M-77	0.269	2,119	
76	Amoco	31052	0.326	1,752	
77	Amoco	M-125	0.164	3,476	
78	Amoco	Rykon No. 2 EP	0.150	3,808	
79	Amoco	Rykon No. 2	0.140	4,081	
80	Amoco	Amdex No. 1 EP	0.242	2,360	
81	Amoco	1157	0.125	4,560	
103	Pacer	PLX-014	0.070	8,104	
104	Pacer	PLX-014	0.087	6,577	400
105	Pacer	PLX-014	0.068	8,342	550
106	Pacer	PLX-014	0.043	13,256	660
107	Pacer	PLX-014	0.041	13,902	660
162	Pacer	PLX-014	0.174	3,276	400
163	Pacer	PLX-014	0.108	5,278	400
185	Pacer	DHT-90G	0.110	6,195	200
186	Pacer	DHT-90G	0.091	6,525	400
187	Pacer	DHT-90G	0.065	9,135	660

*Lubricant Test Machine was developed in conjunction with the "Program to Develop Improved Sealed-Geothermal Rock Bits." This program was funded by the Department of Energy/Division of Geothermal Energy with Terra Tek as the prime contractor. Lubricant tests for the Downhole Motor Program and the Geothermal Bit Program were numbered consecutively. The tests results listed in this table apply to the Downhole Motor Program.

REFERENCES

1. Black, A. D., et al., "Development of Improved Rotary Seals for Downhole Motors in Geothermal Applications," Geothermal Resources Council Transactions, Volume 2, July, 1978, pp. 51-54.

2. DeLafosse, P. H., et al., "Evaluation of High Temperature Lubricants for Downhole Motors in Geothermal Applications," Geothermal Resources Council Transactions, Volume 3, September, 1979, pp. 149-152.

3. Wilson, J. G., et al., "Improvements in Rotary Seals for Downhole Motors in Geothermal Applications," Geothermal Resources Council Transactions, Volume 3, September, 1979, pp. 785-788.

4. DeLafosse, P. H., et al., "Development of an Improved Bearing Pack for Downhole Motors in Geothermal Applications," Geothermal Resources Council Transactions, Volume 5, October, 1981, pp. 409-412.

5. DeLafosse, P. H., et al., "Development of Improved High Temperature Seals and Lubricants for Downhole Motors in Geothermal Applications," ASME Paper 83-PET-23, presented at the 6th Annual Energy-Sources Technology Conference, Jan. 30-Feb. 3, 1983, Houston, Texas.

6. Black, A. D., et al., "Final Report: Program to Develop Improved Downhole Drilling Motors," TT No. TR77-29, May, 1977. (Also published as DOE Report No. DOE TID 28686, March 1977).

7. Black, A. D., et al., "Semi-Annual Report: Program for the Improvement of Downhole Drilling Motor Bearings and Seals," TT No. TR77-107, December, 1977.

8. Black, A. D., et al., "Phase II - Final Report: Program for the Improvement of Downhole Drilling Motor Bearings and Seals," TT No. TR78-28, May, 1978.

9. Black, A. D., et al., "Phase III - Part 2 Semi-Annual Report: Program for the Improvement of Downhole Drilling Motor Bearings and Seals," TT No. TR78-58, November, 1978. (Also published as Sandia National Laboratories Report No. SAND79-7124, March, 1980).

10. Tibbitts, G. A., et al., "Phase III - Part 2 Seim-Annual Report: Program for the Improvement of Downhole Drilling Motor Bearings and Seals," TT No. TR79-38, May, 1979.

11. Tibbitts, G. A., et al., "Phase III - Part 2 Final Report: Program for the Improvement of Downhole Drilling Motor Bearings and Seals," TT No. TR79-89, November, 1979. (Also published as Sandia National Laboratories Report No. SAND79-7125, March, 1980).

12. Tibbitts, G. A., et al., "Phase IV Semi-Annual Report: Program for the Improvement of Downhole Drilling Motor Bearings and Seals," TT No. TR80-53, May, 1980.

13. Tibbitts, G. A., et al., "Phase IV Final Report: Program for the Improvement of Downhole Drilling Motor Bearings and Seals," TT No. TR80-88, November, 1980. (Also published as Sandia National Laboratories Report No. SAND81-7066, April, 1981).

14. DeLafosse, P. H., et al., "Phase V Final Report: Program for the Improvement of Downhole Drilling Motor Bearings and Seals," DRL No. TR82-03, October, 1982. (Also published as Sandia National Laboratories Report No. SAND

15. Dareing, D. W., "Factors Affecting Seal Life in Downhole Motors," MEI No. TR79-5, February, 1979. (Also published as Sandia National Laboratories Report No. SAND79-7123, January, 1980).

16. Barnwell, J. L. and Dareing, D. W., "Bending Stress and Frequency Calculations for the Bearing Pack Shaft," MEI No. TR79-26, October, 1979 (Revised January, 1980). (Also published as Sandia National Laboratories Report No. SAND80-7030, April, 1980).

17. Pedotto, V. A. and McCarthy, R. L. M., "Program to Improve Downhole Drilling Motors - Task I - Seal Failure Analysis," FAA No. FAA-80-10-07, October, 1980.

18. McCarthy, R. L. M. and Pedotto, V. A., "Program to Improve Downhole Drilling Motors - Task 2 - Lip Seal Design," FAA No. FAA-81-7-7, April, 1981.

19. Herbert, P., "Turbodrilling in the Hot-Hole Environment," Journal of Petroleum Technology, pp. 2369-2376, October, 1982.

DISTRIBUTION: (474)
TID-4500-R66-UC-66c

Tom Anderson
Venture Innovations
P.O. Box 35845
Houston, Texas 77035

Ed Bingman
Shell Oil Company
Two Shell Plaza
P.O. Box 2099
Houston, Texas 77001

Larry Diamond
Dyna-Drill
P.O. Box C-19576
Irvine, California 92713

Tom Turner
Phillips Petroleum Company
Geothermal Operations
655 East 4500 South
Salt Lake City, Utah 84107

Jim Kingsolver
Geothermal Operations
Smith Tool
P.O. Box C-19511
Irvine, California 92713

John C. Rowley
Los Alamos National Labs
Mail Stop 570
Los Alamos, New Mexico 87545

Ed Martin
Superior Oil
Eastern Division
P.O. Box 51108 OCS
Lafayette, Louisiana 70505

B. J. Livesay
129 Liverpool
Cardiff, California 92007

Ben Bradford
Dowell
P.O. Box 2710
Tulsa, Oklahoma 74102

Gene Polk
NL Baroid
P.O. Box 280
Sandia Park, New Mexico 87047

James W. Langford
Security Division
Dresser Industries, Inc.
P.O. Box 24647
Dallas, Texas 75224

John E. Fontenot
NL, MWD
P.O. Box 60070
Houston, Texas 77205

Del E. Pyle
Union Geothermal Division
Union Oil Co. of California
Union Oil Center
Los Angeles, California 90017

William D. Rumbaugh
Research & Development
Otis
P.O. Box 34380
Dallas, Texas 75234

Dwight Smith
Halliburton
Drawer 1431
Duncan, Oklahoma 73533

Tom Warren
Amoco Production Company
Research Center
P.O. Box 591
Tulsa, Oklahoma 74102

H. E. Mallory
P.O. Box 54696
Tulsa, Oklahoma 74155

M. S. Kalsi
Kalsi Engineering, Inc.
430 Hwy. 6 South, Suite 201
Houston, Texas 77079

John Breaker
American Variseal Corp.
P.O. Box 840
Broomfield, Colorado 80220

John Godbee
Union Carbide Corp.
Linde Division
Parkway Plaza North, Suite 580
14114 Dallas Parkway
Dallas, Texas 75240

R. A. Banks
Gits Brothers Manufacturing Co.
6385 West 74th St.
Bedford Park, Illinois 60638

Roger McCarthy
Failure Analysis Associates
750 Welch Rd., Suite 116
Palo Alto, California 94304

Maurer Engineering (2)
2916 West T.C. Jester
Houston, Texas 77018
Attn: William Maurer
Jeff Barnwell

Dr. Melvin Friedman
Professor of Geology
Center for Tectonophysics
and Dept. of Geology
Texas A&M University
College Station, Texas 77843

W. P. Grace, DOE/ALO
Nuclear & Geosciences Division

1811 C. A. Arnold
2545 J. H. Barnette
3141 L. J. Erickson (5)
3151 W. L. Garner (3)
6200 V. L. Dugan
6240 R. K. Traeger
6241 J. R. Kelsey (10)

Robert J. Schmal
Stein Seal Company
Engineering Group
1004 West 9th Ave.
King of Prussia, PA 19406

UTEX Industries, Inc. (2)
P.O. Box 79227
Houston, Texas 77079
Attn: Hank Miser
Fred Pippert

Bob Portwood
Pacer Lubricants
1440 N. Loop E., Suite 345
Houston, Texas 77009

Dyna-Drill (2)
P.O. Box C-19576
Irvine, California 92713
Attn: John Tschirky
Bela Geczy

Terra Tek (5)
University Research Park
400 Wakara Way
Salt Lake City, Utak 84108
Attn: Bennie DiBona
Peter DeLafosse
Gordon Tibbitts
Alan Black
Bruce Walker

U.S. Department of Energy (3)
Geothermal Hydropower
Technologies Division
Forrestal Bldg., CE 324
1000 Independence Ave. S.W.
Washington, D.C. 20585
Attn: J. Bresee
R. Toms
D. Allen

6241 J. T. Finger (15)
6252 H. M. Dodd
6253 D. A. Northrop
6257 J. K. Linn
8214 M.A Pound