ANL/ASD/CP-92268
CONF-970503--
RECEIVED
JUN 09 1997
OSTI

HIGH PEAK POWER TEST OF S-BAND WAVEGUIDE SWITCHES

A. Nassiri, A. Grelick, R. L. Kustom, and M. White
Advanced Photon Source, Argonne National Laboratory
9700 South Cass Avenue, Argonne, Illinois 60439 USA

Abstract

The injector and source of particles for the Advanced Photon Source (APS) is a 2856-MHz S-band electron-positron linear accelerator (linac) which produces electrons with energies up to 650 MeV or positrons with energies up to 450 MeV. To improve the linac rf system availability, an additional modulator-klystron subsystem is being constructed to provide a switchable hot spare unit for each of the five existing S-band transmitters. The switching of the transmitters will require the use of SF6-pressurized waveguide switches at a peak operating power of 35 MW. A test stand was set up at the Stanford Linear Accelerator Center (SLAC) Klystron-Microwave laboratory to conduct tests characterizing the power handling capability of these waveguide switches. Test results are presented.

1 INTRODUCTION

The APS linac structures are powered by five 35-MW klystrons, two for the electron linac and three for the positron linac. The upstream accelerating structure in each linac is directly powered by a klystron, while the remaining 12 structures are powered in groups of four by a klystron and a SLED [1].

To improve the overall availability of the linac rf system to deliver beam to the APS storage ring, a sixth rf station comprised of a modulator and a klystron has been added to the five existing rf transmitters. This system is currently under construction and high-voltage power supply testing [2]. Once on-line, this rf station will serve as a hot spare unit for any of the five on-line S-band transmitters through a suitable and reliable SF6-pressurized waveguide switching system.

Currently, rf waveguide switches in pressurized systems are used in routine operation of S-band linacs at other accelerator facilities. For example, the 295-MeV S-band injector linac for the Duke University storage ring uses aluminum WR-284 waveguide pressurized with 26 PSIG of sulfur hexafluoride (SF6) throughout the entire system. Commercially available waveguide switches have been incorporated into the pressurized waveguide system to provide rf power switching capability. This pressurized waveguide switching system has been operating reliably at a peak rf power of less than 30 MW, an rf macropulse length of 2 μs, and a repetition rate of 2 Hz without significant arcing or rf breakdown. The pressurized SF6 in this system circulates through a dryer to remove moisture and other contaminants [3].

The pressurized waveguide switches to be used in conjunction with the APS linac hot spare transmitter must be capable of handling a peak rf power of 35 MW at a maximum repetition rate of 60 Hz and an rf pulse width of 5 μs. No S-band pressurized waveguide switches are currently being operated at this power level. To investigate the operational reliability of these pressurized switches under high peak rf power, an experimental rf setup was assembled at the SLAC Klystron and Microwave Test Laboratory as described below.

2 EXPERIMENTAL SET-UP

Two types of commercially available waveguide switches were tested. In the first setup, two WR-284 switches (from two different vendors) were configured as shown schematically in Figure 1. The layout is comprised of a bi-directional coupler downstream of the klystron output to monitor forward and reflected power, and two rf windows (before the switch and upstream of the water load) to separate the pressurized section of the waveguide from the vacuum side. In the second setup, the WR-284 switch was replaced by a WR-340 switch. There were matching tapered transitions between the two waveguide sizes, and WR-340 windows were used instead of WR-284 windows.

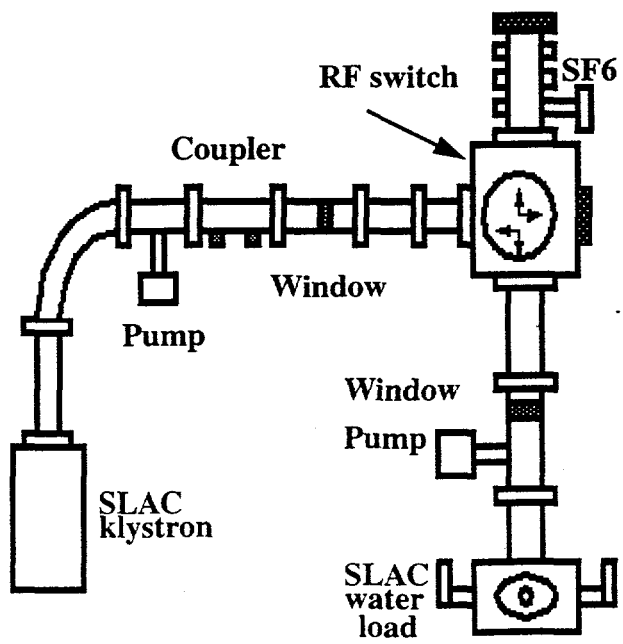

Figure 1: Schematic layout of the rf pressurized waveguide switch test.

Rf power for the test setup was provided by a SLAC type 5045 klystron operating at 2856 MHz with a nominal beam voltage of 350 kV and 393 A of beam current. The

The submitted manuscript has been created by the University of Chicago as Operator of Argonne National Laboratory ("Argonne") under Contract No. W-31-109-ENG-38 with the U.S. Department of Energy. The U.S. Government retains for itself, and others acting on its behalf, a paid-up, nonexclusive, irrevocable worldwide license in said article to reproduce, prepare derivative works, distribute copies to the public, and perform publicly and display publicly, by or on behalf of the Government.

DISTRIBUTION OF THIS DOCUMENT IS UNLIMITED

MASTER

DISCLAIMER

This report was prepared as an account of work sponsored by an agency of the United States Government. Neither the United States Government nor any agency thereof, nor any of their employees, make any warranty, express or implied, or assumes any legal liability or responsibility for the accuracy, completeness, or usefulness of any information, apparatus, product, or process disclosed, or represents that its use would not infringe privately owned rights. Reference herein to any specific commercial product, process, or service by trade name, trademark, manufacturer, or otherwise does not necessarily constitute or imply its endorsement, recommendation, or favoring by the United States Government or any agency thereof. The views and opinions of authors expressed herein do not necessarily state or reflect those of the United States Government or any agency thereof.

DISCLAIMER

Portions of this document may be illegible in electronic image products. Images are produced from the best available original document.

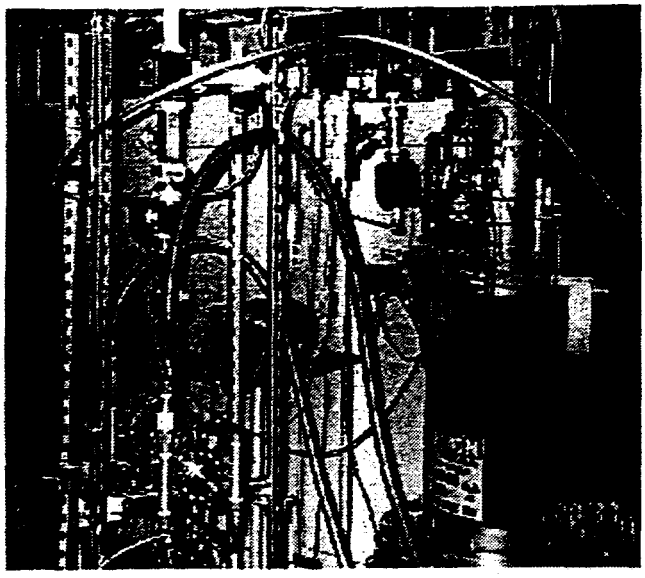

Figure 2: Waveguide switch test set-up.

peak rf power was 40 MW, with a 3.5 μs rf pulse width and a 60-Hz repetition rate. A photograph of the test set-up is shown in Figure 2. Vendor 1's WR-284 waveguide switch is pictured in Figure 3 and Vendor 2's WR-340 waveguide switch is pictured in Figure 4.

For each test set-up, the appropriate waveguide-switch section was pressurized with SF6, and the rf power was gradually increased until an arc or other operational problem occurred. The klystron forward and reflected power were monitored at the bi-directional coupler at the output port of the klystron using a peak power analyzer. Forward rf power through the switch was calculated from water load calorimetric measurements.

3 TEST RESULTS

3.1 The WR-340 Switch

With the waveguide-switch section pressurized to 30 PSIG, rf power from the klystron was gradually increased. Arcing occurred at about 5 MW peak rf power. The rf power could not be increased due to persistent arcing and eventual SF6 breakdown. After purging and refilling with fresh SF6, rf power was again applied and the power level was gradually increased to 10 MW. Within a short time, arcing occurred in the straight waveguide section approximately six inches upstream of the switch. A few more attempts were made, but the rf power could not be increased above 10 MW due to continuous waveguide arcing and rf trips on klystron reflected power.

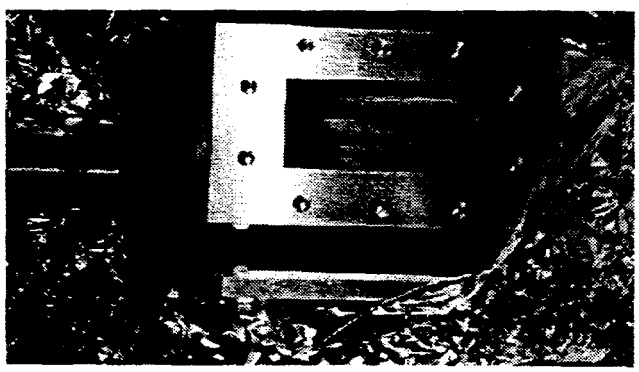

Figure 3: Vendor 2's WR-340 waveguide switch.

3.2 WR-284 Switches

The rotatable blades in both of the WR-284 switches became permanently stuck in position after a short period of operation at 30-MW peak power.

The WR-284 switch from vendor 1 was tested first, and was initially pressurized to 30 PSIG with SF6. With an rf pulse width of 3.5 μs and a 60-Hz repetition rate, the rf peak power was gradually increased to 40 MW. At 25 MW, some arcs occurred inside the pressurized waveguide upstream of the input port of the switch. It was necessary to purge the contaminated SF6 and refill, and we then reached 40 MW peak power at 30 PSIG of SF6 with no arcs. The rf match between the switch and the waveguide was quite poor. The measured return loss was 17 dB, and the klystron experienced a few reflected power trips as a result of the poor match.

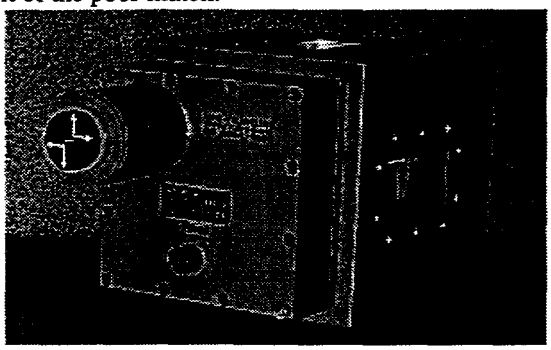

Figure 4: Vendor 1's WR-284 waveguide switch.

Next, vendor 2's WR-284 switch was installed into the test setup and the waveguide was again pressurized to 30 PSIG with SF6. Rf power was applied and increased to 30 MW. Aside from occasional vacuum bursts, there was no sign of arcing in the pressurized section. The rf power was kept at 30 MW for one hour and was then increased to 40 MW in 1-MW steps. The setup also ran well at 40 MW with no rf breakdown. The rf match for vendor 2's WR-284 waveguide switch was significantly better than for vendor 1's WR-284 switch in the same setup. The measured return loss for vendor 2's switch was 22 dB. Figure 5 shows a typical oscilloscope waveform indicating, with different vertical scales, the signals for forward and reflected rf power.

4 NETWORK ANALYZER CHECKS

To determine possible causes of the failure of the WR-340 switch, various configurations of the switch with and without the tapered transitions were bench tested using a network analyzer, as shown in Figure 6. Return losses were checked in an attempt to explain the observed breakdown at relatively low peak power (~5 MW). The low peak

power breakdown could have been caused by standing waves in the WR-340 waveguide system. All bench measurements indicated that the transitions had the smallest return losses of any components, but losses were at least 22 dB for all transitions.

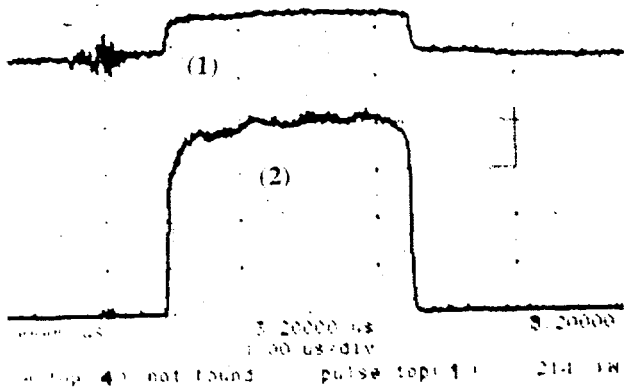

Figure 5: Oscilloscope waveforms showing: (1) forward power, (2) reflected power with a pulse width of 3.3 µs. Vertical scales are different in (1) and (2).

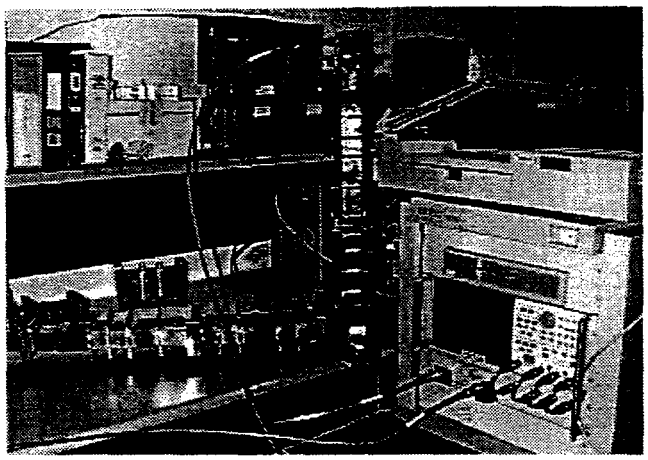

Figure 6: Network analyzer measurements of the WR-340 switch and tapered transitions.

5 DISCUSSION

One goal of these measurements was to find the dependence of peak rf power on SF6 pressure in the waveguide switches at peak power levels of 35 MW. The measurements were not possible for the WR-340 switch due to breakdown problems, however some data were obtained for the WR-284 switches. In all cases, the rf pulse width was 3.5 µs, and the repetition rate was 60 Hz. At a given SF6 pressure, the klystron output power was increased until an arc occurred, at which time the SF6 pressure was increased. The procedure was repeated until a maximum peak power of 40 MW was achieved. Although both WR-284 switches were tested to a peak power of 40 MW, there were rf breakdowns that required purging and refilling the SF6. Both WR-284 switches malfunctioned mechanically above 30 MW, causing the rotating mechanism inside the switch to get stuck. The rf match of vendor 2's switch was about 5dB better than that of vendor 1's switch in this setup. Visual inspection of both WR-284 switches after the high power tests showed evidence of arcing inside the switch.

6 CONCLUSIONS

There were indications from these tests that 35 PSIG may be a desirable operating pressure for the high-power SF6 waveguide components. There was a an observable inflection point at 35 PSIG, corresponding to the end of the linear relationship between pressure and breakdown power.

Commercially available WR-284 waveguide switches are not likely to operate reliably under the APS conditions of 35-MW peak power, 5-µs pulse width, and 60-Hz repetition rate without modification or development. Peak and average power levels, and number of joules per pulse are greater than is the case for other pressurized waveguide switches currently in operation at other facilities.

The WR-340 results cannot be understood without further high power tests. Scaling suggests that this waveguide should be able to handle the 35-MW peak power without arcing when pressurized with SF6. Low power inspection and post-testing did not reveal any reason for the failure at low rf peak power.

7 ACKNOWLEDGMENTS

The authors wish to thank G. Caryotakis and R. Koontz of SLAC for providing access to their laboratory to do these tests, and R. Goldsberry and G. Sandoval, also from SLAC, for their help in operating the test set-up.

We also thank J. Hoyt and M. Phelan of APS for mechanical assistance, G. Mavrogenes for technical advice, and J. Galayda for support. This work was supported by the U. S. Department of Energy, Office of Basic Sciences, under Contract No. W-31-109-ENG-38.

8 REFERENCES

[1] M. White et al.,"Construction, Commissioning, and Operation of the Advanced Photon Source (APS) Linear Accelerator" Proc. of the XVIII International Linac Conference, Geneva, Switzerland, 26-30 August 1996, pp. 315-319.

[2] R. Fuja et al., "Constant-Current Charging Supplies for the Advanced Photon Source (APS) Linear Accelerator Modulators," these proceedings.

[3] P. Wang, N. Hower, P. O'Shea, "RF Phasing of the Duke Linac," Proc. of the 1995 Particle Accelerator Conference, Dallas, Texas, May 1995, pp. 932-934 (1996).