CONF-840788--4

Electron Impact Ionization of N^{4+} and N^{5+}

MASTER

P. Defrance, S. Chantrenne, F. Brouillard and S. Rachafi
Institut de Physique
Chemin du Cyclotron 2, B-1348 Louvain-la-Neuve, BELGIUM

D. Belic and J. Jureta
Institute of Physics
Beograd, YUGOSLAVIA

D. Gregory
Oak Ridge National Laboratory
Oak Ridge, U.S.A.

CONF-840788--4

DE85 016359

Abstract

A new crossed beams apparatus for measuring absolute electron impact ionization cross-sections of multiply charged ions is described. First measurements are also reported which deal with N^{4+} and N^{5+}. The results are in good agreements with those previously obtained by the Oak Ridge group. For N^{5+} a non negligible signal is observed below the ground state ionization threshold. It is attributed to the presence of ions in metastable states. From the semi-empirical Lotz formula, the population of ions in those states is estimated to some 3%.

Contribution to the International Conference on the Physics of Highly Ionized Atoms - Oxford - England
2-5 july 1984

To be pub.
Nuclear Instruments & Methods
MARCH 1985

DISTRIBUTION OF THIS DOCUMENT IS UNLIMITED

1. Introduction

Plasma physicists repeatedly call for absolute electron impact ionization cross-sections of multiply charged ions. Their request has motivated us to take advantage of the ECR ion source facility recently installed at Louvain-la-Neuve and to build a new experimental set up dedicated to electron impact inonization of ions.

The major feature is the use of animated crossed beam method [1] . In this method the electron beam is swept across the ion beam in a linear sec-saw motion at constant velocity.

The cross-section is related to the measured quantities in the following way :

$$\sigma = \frac{v_e v_i}{(v_e^2 + v_i^2)^{1/2}} \frac{uk}{\left(\frac{I_e}{e}\right)\left(\frac{I_e}{q}\right)} \qquad (1)$$

In this formula, u is the scanning velocity, k is the total number of events produced during one passage across the ion beam, e, v_e, I_e, q, v_i and I_i are charge, velocity and beam current of the electrons and ions respectively.

The main advantage of the method is that it does not require the knowledge of beam density profiles.

2. Apparatus

Figure 1 shows a schematic plan of the apparatus. The ion beam is extracted from an ECR source - not shown on the figure - providing charge states as high as 15 for Argon [2]. The usual acceleration voltage is of order of a few kV. The beam is electrostatically and magnetically focused before entering the Wien filter (1) for mass and charge analysis. After a pair of plane einzel lenses (2) the beam is electrostatically purify (3) before it passes a set of collimating diaphragms (4 - 5).

The electron gun (6) is the same as used in earlier experiments [3] . In the subsequent magnetic charge state analyser (7), product ions are imposed a fixed radius of curvature of 30 cm. A movable Faraday cup (8) is adjusted to collect the primary beam. Product ions passe a last electrostatic deflector (9) and are detected by a channelplate detector (11). A movable device (10) can be introduced into the beam trajectory for measuring the absolute detection efficiency. The electron gun is schematically shown on the insert of figure 1. A ribbon electron beam is extracted in a Pierce cathode (K) - Anode (A) configuration. The pair of plates (B) acts simultaneously as a lens and as a beam deflector.

The electron beam crosses the ion beam (I) at right angle in the space between the gronded electrodes (C). Electrons are collected by a Faraday cup (F).

Supressor plates (D) prevent secondary electrons to interact with the ion beam. The constant scanning velocity is measured by means of two thin wires (W) located on both sides of the ion beam.

For the measurements, the scanning frequency is fixed at 36 Hz. The signals from the ion detector are stored in a multichamel analyser, used in the multiscaling mode in synchronism with the sweeping voltage.

Typical working conditions are : I_e = 2 mA; I_i = 15 nA for N^{4+}, I_i = 5 nA for N^{5+}; K = 0.1/crossing and u = 0.4 m/sec.
The absolute detection efficiency is determined by the controlled beam attenuation method [4].

3. Results

A first series of measurements has been carried out with N^{4+} and N^{5+} ions. The results are shown in figure 2 and 3 together with experimental data of Crandall etal [5] .

The two sets of experiments are in good agreement. For N^{4+}, the excitation-autoionization structure is clearly resolved and it is seen to be very close to the theoretical predictions by H. Jakubowicz and D.L. Moores [6] in the Born-Exchange approximation.

For N^{5+}, a non-zero cross-section is observed below threshold for ionization of the ground-state ion. This indicates the presence of ions in the metastable 2^1S or 2^3S states.

According to the Lotz formula their fraction is estimated to some 3%.

References

[1] F. Brouillard and P. Defrance, Physica Scripta 3 (1983) 801.

[2] Y. Jongen and G. Ryckewaert, Proc. Int. Ion Engineering Congress ISIAT Kyoto (1983) p. 199.

[3] P. Defrance, W. Claeys and F. Brouillard, J. Phys. B 15 (1982) 3509.

[4] F. Brouillard, S. Chantrenne, W. Claeys, A. Cornet and P. Defrance in Abstracts of contributed papers XIII IC PEAC Berlin (1983) p.713.

[5] D.H. Crandall, R.A. Phaneuf and D.A. Gregory, Report N° ORNL/TM7020 (1979).

[6] H. Jakubowicz and D.L. Moores, J. Phys.B 14 (1981) 3733.

[7] W. Lotz, J. Phys. 216,(1968),241.

[8] S.M. Younger, J. Quant. Spectros. Rad. Transfer, 25 (1981), 329.

Figure captions

Figure 1. Schematic plan of the apparatus :
1, Wien filter; 2, electrostatic lenses; 3, electrostatic deflector; 4, 5, diaphragms; 6, electrongun; 7, magnetic analyser; 8, moving Faraday cup; 9, electrostatic deflector; 10, moving slit and Faraday cup; 11, detector.
The insert shows a schematic plan of the electron gun K, cathode; A, anode; B, focusing and deflecting electrodes; C grounded electrodes; I, ion beam; W, two wires parallel to the ion beam; D suppressors; F, Faraday cup.

Figure 2. Cross-section for ionization of N^{4+} by electron impact : full circles, our results; —— D.H. Crandall et al (experimental) [5] ; --- H. Jakubowicz and D.L. Moores [6] .

Figure 3. Cross-section for ionization of N^{5+} by electron impact : full circles, our results; open circles, D.H. Crandall et al. [5] ; --- Lotz formula [7] ;Δ Younger [8]

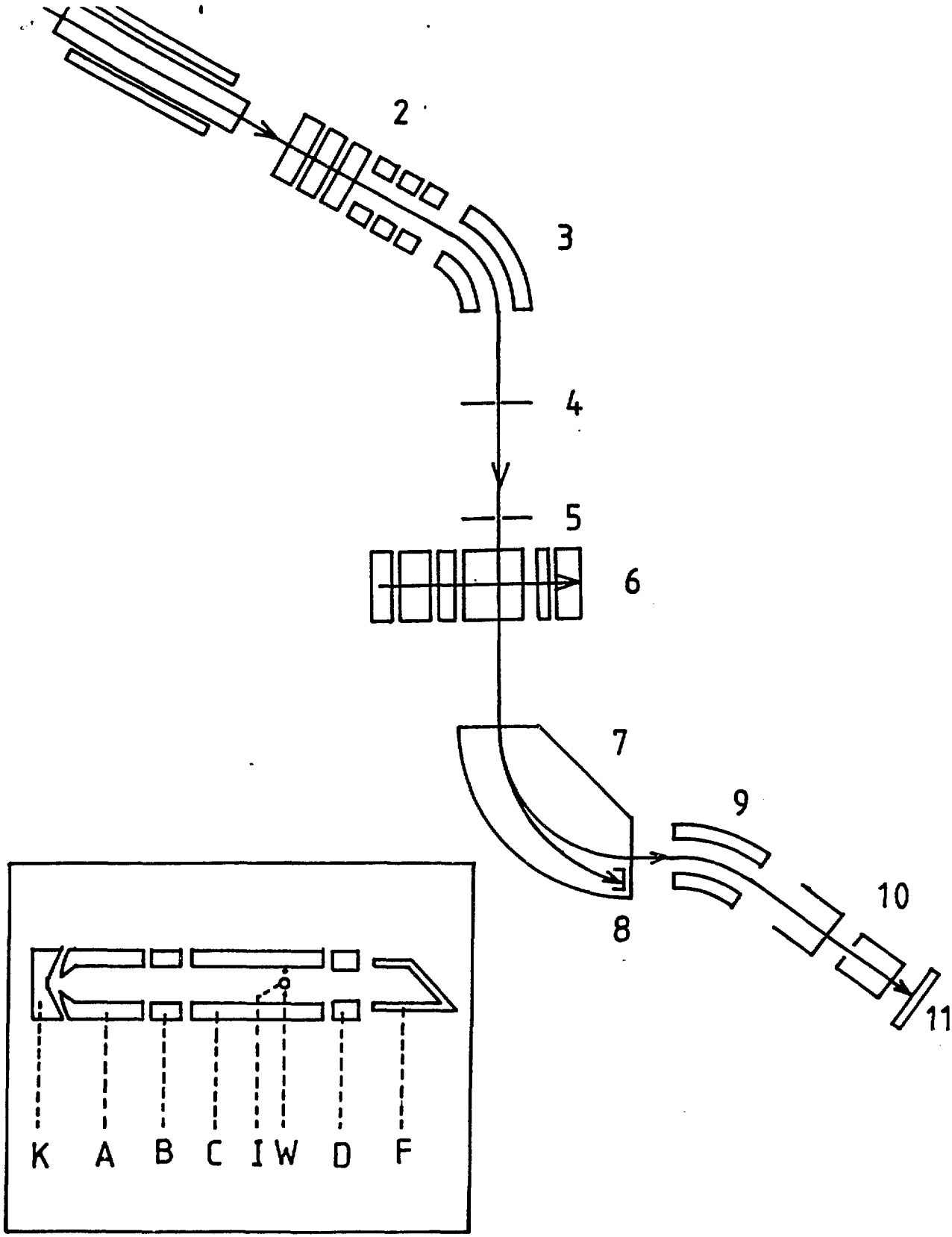
2
3
4
5
6
7
8
9
10
11
K
A
B
C
I
W
D
F

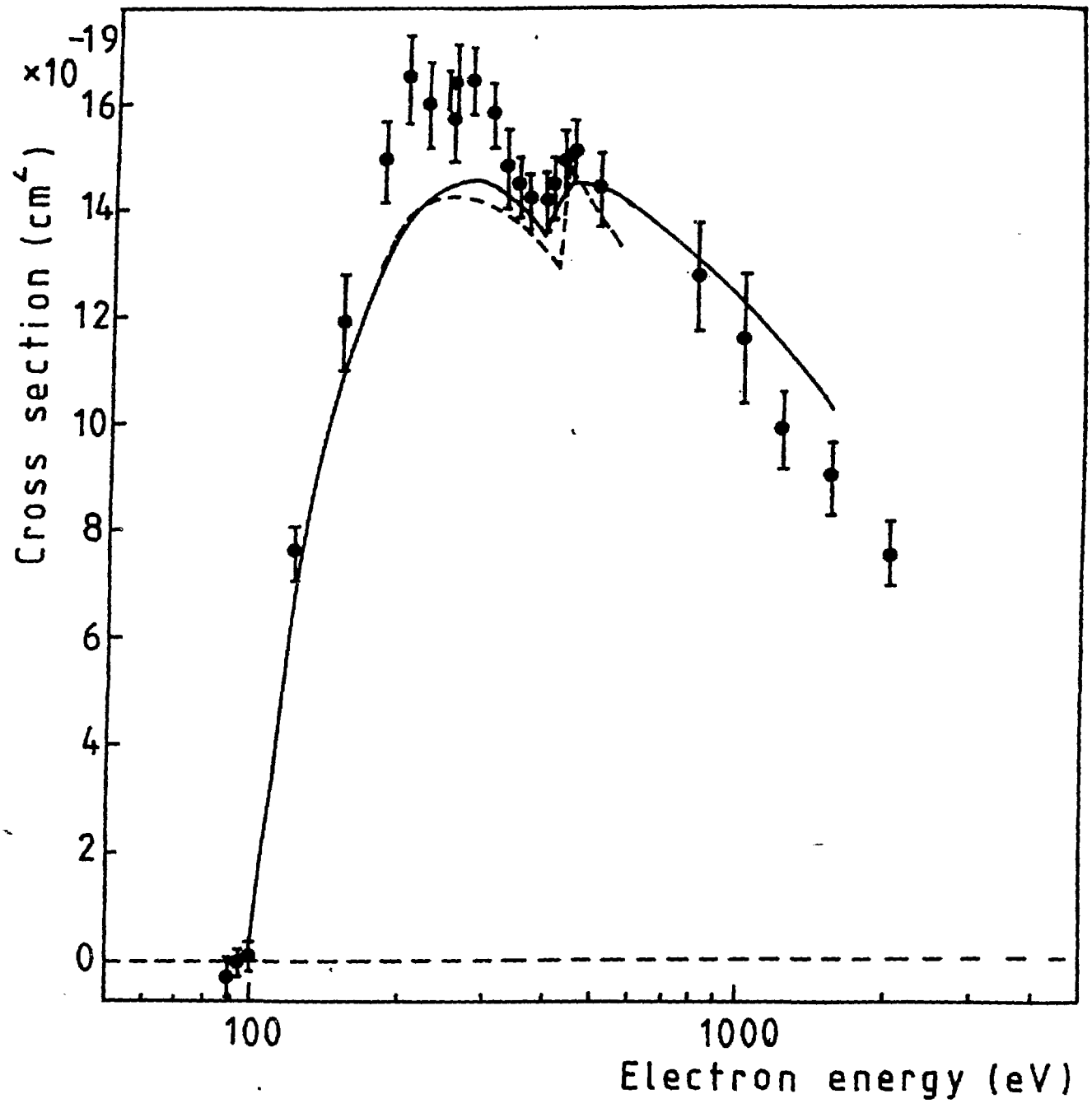
×10^-19
16
14
12
10
8
6
4
2
0
Cross section (cm^2)
100
1000
Electron energy (eV)

FIGURE 2

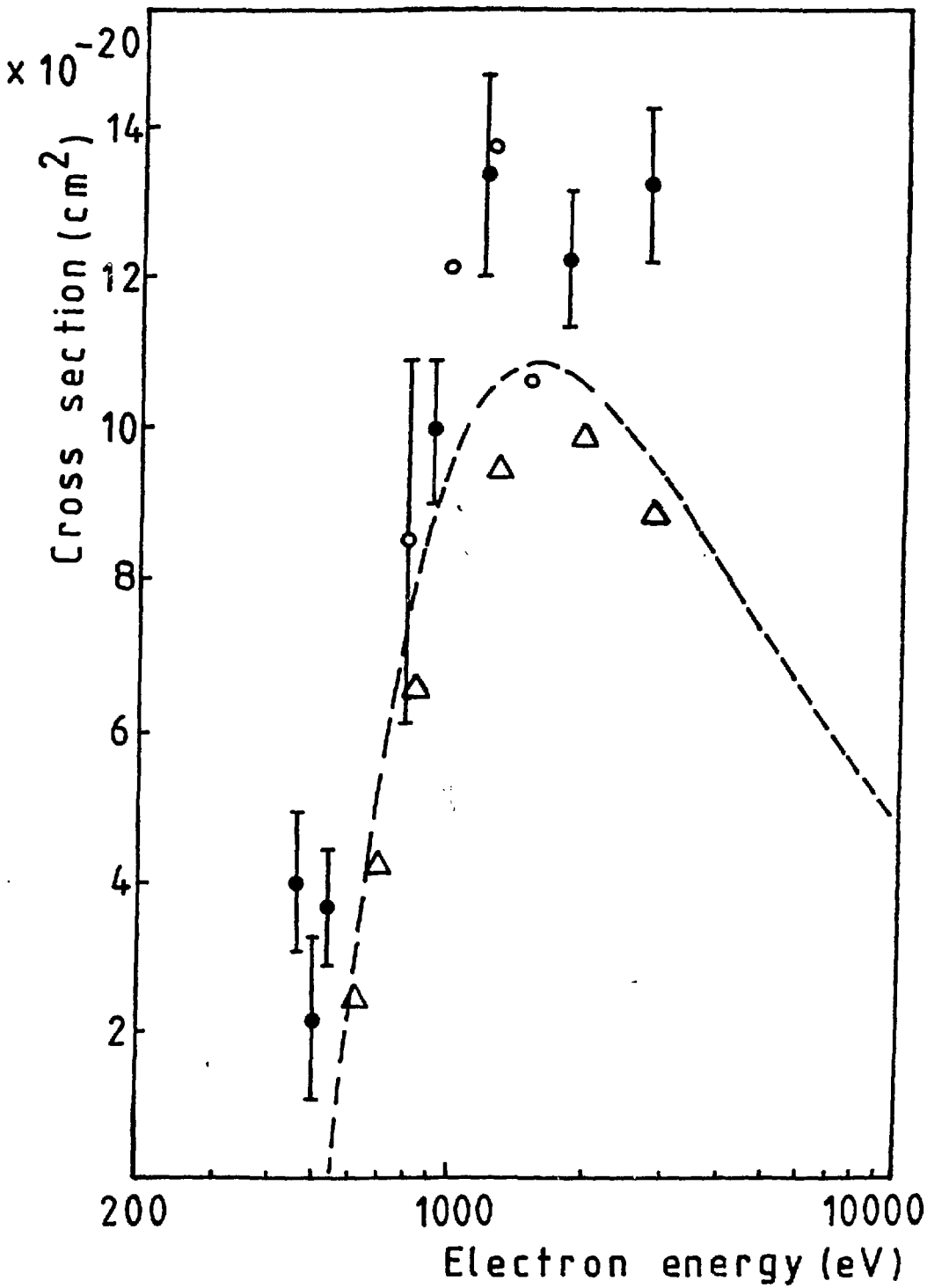
x 10^-20
Cross section (cm^2)
14
12
10
8
6
4
2
200
1000
10000
Electron energy (eV)

FIGURE 3