CONF-831047--94

Po-210 DISTRIBUTION IN URANIUM-MILL CIRCUITS*

CONF-831047--94

DE84 002069

John W. McKlveen
Electrical and Computer Engineering
College of Engineering and Applied Sciences
Arizona State University
Tempe, Arizona 85287

Norman D. Hubele
Garrett Pneumatic Systems Division
111 S. 34th Street
Phoenix, Arizona 85010

W. J. McDowell and G. N. Case
Chemical Technology Division
Oak Ridge National Laboratory
Oak Ridge, Tennessee 37830

To be presented at the American Nuclear Society Winter Conference, October 1983, San Francisco, CA, and to be published in the proceedings of that meeting.

DISCLAIMER

This report was prepared as an account of work sponsored by an agency of the United States Government. Neither the United States Government nor any agency thereof, nor any of their employees, makes any warranty, express or implied, or assumes any legal liability or responsibility for the accuracy, completeness, or usefulness of any information, apparatus, product, or process disclosed, or represents that its use would not infringe privately owned rights. Reference herein to any specific commercial product, process, or service by trade name, trademark, manufacturer, or otherwise does not necessarily constitute or imply its endorsement, recommendation, or favoring by the United States Government or any agency thereof. The views and opinions of authors expressed herein do not necessarily state or reflect those of the United States Government or any agency thereof.

*Research sponsored jointly by the Division of Chemical Sciences, U.S. Department of Energy under contract W-7405-eng-26 with the Union Carbide Corporation and Arizona State University.

MASTER

DISTRIBUTION OF THIS DOCUMENT IS UNLIMITED

Po-210 DISTRIBUTION IN URANIUM-MILL CIRCUITS

Steps basic to most uranium mills are crushing, grinding, chemical dissolution, drying and packaging. Mills are usually acid leach, generally with solvent extraction recovery, or alkaline leach with direct precipitation of uranium from solution.

Previous research efforts have identified the pathways for radium and thorium in both acid and alkaline leach systems.[1] Acid leach liquor has a tendency to solubilize noteworthy amounts of radium and ∿50% of the thorium into the uranium-laden solution. The final yellowcake may have ∿5% of the initial thorium activity and ∿0.2% of the radium activity. Alkaline leach is more selective than acid leach. Thorium remains virtually insoluble and lesser amounts of radium are extracted into the leach liquor. However, most of the entrained radium reports to the yellowcake.

Little is known about the migration and concentrations of polonium in mill circuits. Polonium distribution is of interest because it is the last radionuclide in the uranium decay series, it may concentrate in various portions of the mill circuit and create contamination problems or it may appear in other byproduct recovery streams (i.e., molybdenum).

Experiment

Samples of ore feed stock, liquids, and final products were collected from representative acid and alkaline leach circuits located in the Grants, New Mexico mineral belt. All samples were prepared for assay from solution containing ∿7 M H_3PO_4 - 0.01 M HCl and the specific details are presented elsewhere.[3] Direct Po-210 extraction was performed using 0.2 M TOPO (trioctylphosphine oxide) in a toluene based scintillator.[2,3] Samples were counted in a PERALS (Photon-Electron Rejecting Alpha Liquid-Scintillation) spectrometer.[4]

Results

The concentration of Po-210 in many of the streams of a typical acid leach, solvent extraction mill is shown in Figure 1. The average standard deviation for all results is ±12%. Only a trace of the available Po-210 is found in the clarified leach that is the solvent extraction feed. Most of the polonium remains with the solid tailings. (However, note that a material balance for Po-210 cannot be obtained from this flow sheet because of unknown dilution factors.)

In the solvent extraction circuit, there appears to be some concentration of polonium in the organic extractant, but little reaches the final yellow-cake product. Apparently there is some mechanism causing polonium to accumulate in the organic extractant part of the extraction circuit. The accumulation could be due to a high chemical affinity of polonium for the organic extractant or the accumulation of some particulate material carrying polonium in the organic-aqueous interface. There is some evidence[5] that the polonium is carried and retained on particulate surfaces since the amount of polonium in the leach liquor could be changed by the filter pore size used to filter this liquid. Smaller pore size resulted in less polonium in the leach liquor.

In both the ore feed and the solid fraction of the leach output it was found that 26% more Po-210 was present than predicted for a uranium equilibrium decay situation. Assay by surface-barrier alpha spectrometry techniques confirmed the excess Po-210 and also showed above-equilibrium amounts of Ra-226. The presence of excess progeny was discussed with the mill owners, and it was determined that a secondary ore body was being mined. Secondary ore bodies have been infiltrated with water, and a portion of the uranium solubilized, thus producing a disequilibrium.

A less detailed analysis of an alkaline-leach, caustic-precipitation mill circuit was performed. Analysis of the pregnant uranium solution from the leach filtration showed 0.7 dpm/ml. Obviously, here also, the Po-210 reports to the tailings pile.

Summary

Greater than 99% of all incoming Po-210 reports to the tailing piles for both the acid and the alkaline leach uranium circuits. Leached Po-210 may be carried along on small particles rather than dissolved in solution. There does not appear to be any radiologically significant buildup or accumulation in the acid leach circuit, but there are noteworthy amounts in the molybdenum recovery solution.

References

1. WIN-101, 11, 112, 125, Summary reports on Uranium Mill Activities in Effluent: National Lead Company, Inc.: Raw Materials Development Laboratory; Winchester, MA (1958-69).

2. G. N. Case and W. J. McDowell, "An Improved Sensitive Assay for Po-210 Using a Background-Rejecting Extractive Liquid Scintillation Method," *Talanta*, August 1982.

3. J. W. McKlveen, N. Hubele, W. J. McDowell, and G. N. Case, "Po-210 Assay Procedures Applied Uranium Mill Circuits," manuscript in preparation for *Health Physics*.

4. W. J. McDowell, "Simple, Accurate Environmental Alpha Assay by a Liquid Scintillation Method," *Trans. American Nuclear Society*, 39, 62-63 (1981).

5. N. D. Hubele, "Polonium-210 Distribution During the Hydrometallurgical Processing of Uranium Ore," pp 21-23, Thesis, Arizona State University, 1982.

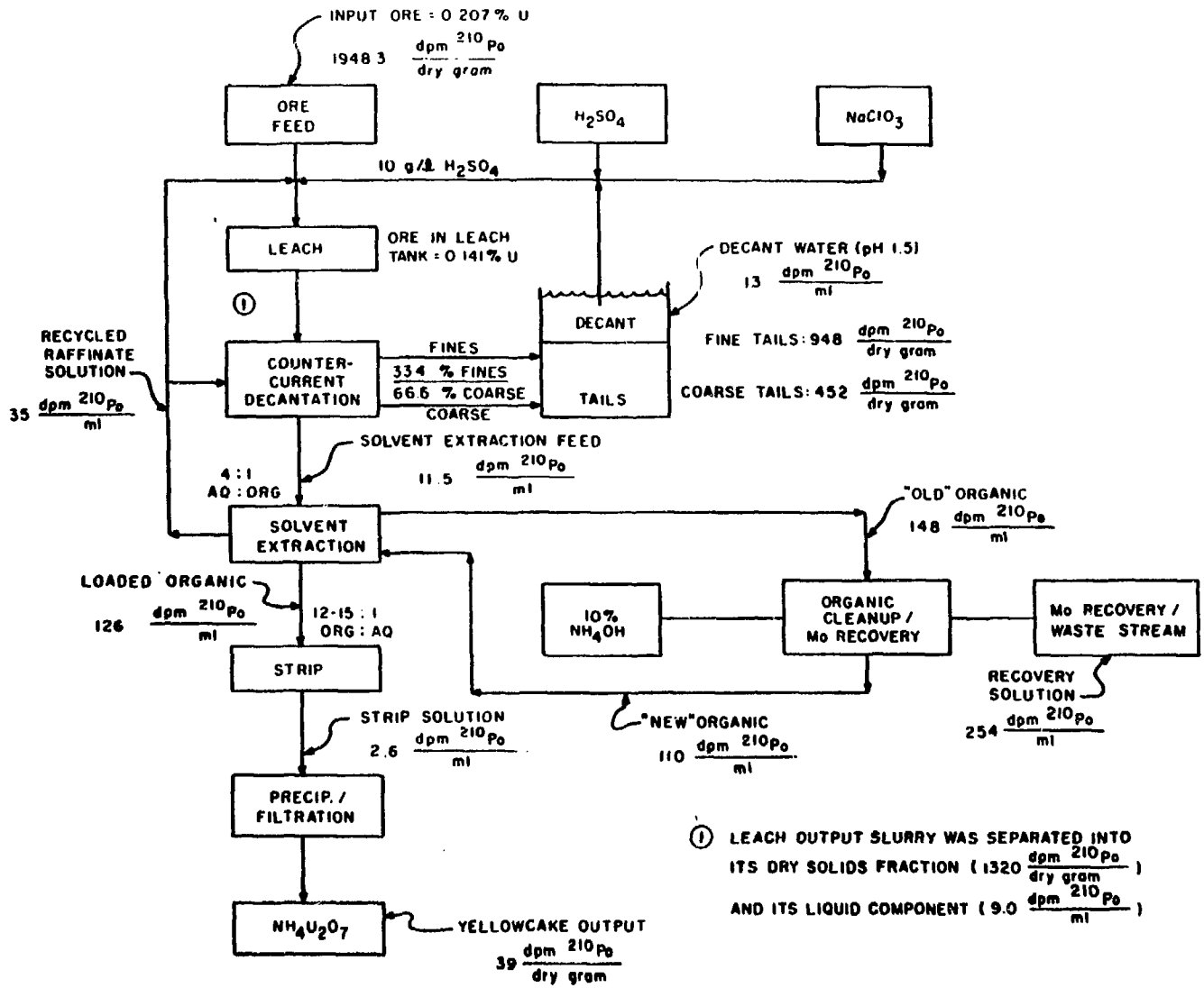

Figure 1. Po-210 Distribution in an Acid Leach Solvent Extraction Mill Circuit