Conf-910857--5

PPPL-CFP--2477

DE92 001830

REQUIREMENTS FOR ITER DIAGNOSTICS

Kenneth M. Young

Plasma Physics Laboratory, Princeton University
P.O. Box 451, Princeton, NJ 08543 USA

I. Introduction

The development and design of plasma diagnostics for the International Thermonuclear Experimental Reactor (ITER) present a formidable challenge for experimental plasma physicists. The large plasma size, the high central density and temperature and the very high thermal wall loadings provide new challenges for present measurement techniques and lead to a search for new methods. But the physics and control requirements for the long burn phase of the discharge, combined with very limited access to the plasma, constrained by the requirement for radiation shielding of the coils and sharing of access ports with heating and current drive power, remote manipulation, fuelling and turn blanket modules, make for very difficult design choices. An initial attempt at these choices has been made by an international team of diagnostic physicists, gathering together in a series of three workshops during the ITER Conceptual Design Activity. The result of these deliberations has been published in Reference 1. This paper is based on that report and provides a summary of its most important points.

To provide a background against which to place the diagnostic requirements and design concepts, the ITER device, its most important plasma properties and the proposed experimental program will be described. The specifications for the measurement of the plasma parameters and the proposed diagnostics for these measurements will then be addressed, followed by some examples of the design concepts that have been proposed. As a result of these design studies, it was clear that there were many uncertainties associated with these concepts, particularly because of the nuclear radiation environment, so that a Research and Development Program for diagnostic hardware was established. It will also be briefly summarized.

DISCLAIMER

This report was prepared as an account of work sponsored by an agency of the United States Government. Neither the United States Government nor any agency thereof, nor any of their employees, makes any warranty, express or implied, or assumes any legal liability or responsibility for the accuracy, completeness, or usefulness of any information, apparatus, product, or process disclosed, or represents that its use would not infringe privately owned rights. Reference herein to any specific commercial product, process, or service by trade name, trademark, manufacturer, or otherwise does not necessarily constitute or imply its endorsement, recommendation, or favoring by the United States Government or any agency thereof. The views and opinions of authors expressed herein do not necessarily state or reflect those of the United States Government or any agency thereof.

MASTER

DISTRIBUTION OF THIS DOCUMENT IS UNLIMITED

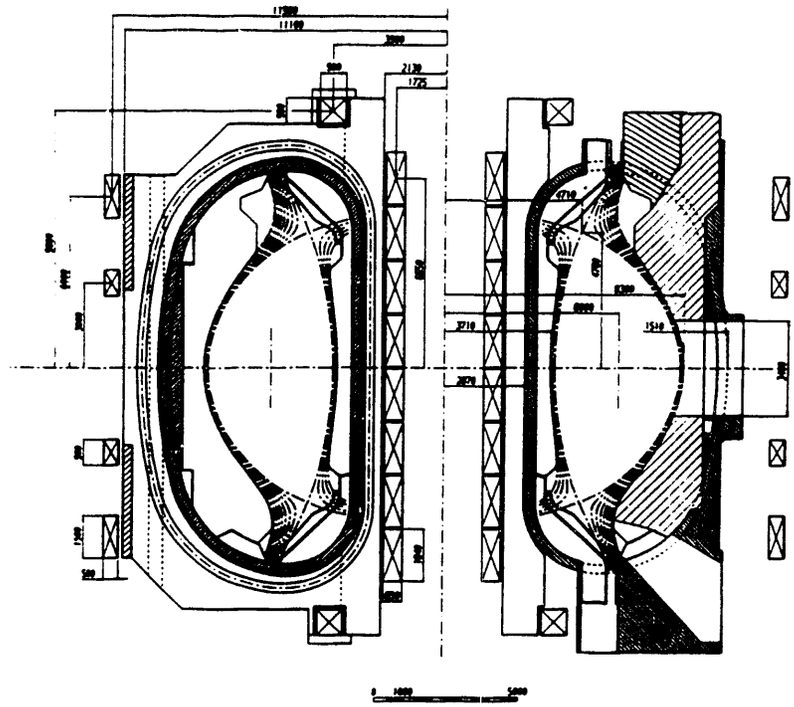

Fig. 1. Cross-sectional view at the mid-plane of a port.

II. ITER: The Device, Plasma Parameters and its Program

An evelation view of the ITER device is shown in Fig. 1. This figure shows two views, one at the midplane of a toroidal field coil, the other at the midplane between coils. It clearly show the main field coils, both toroidal and poloidal, the vacuum vessel structure and shielding and blanket structure inside the vacuum boundary. Protective tiles are mounted on the inner faces of the blanket modules which can be exchanged through large top ports, lower ports being allocated for vacuum pumping. The plasma is strongly elongated vertically and will normally operate in a diverted double-null configuration. The heat-loads and disruption loads for the divertor tiles provide one of the most difficult engineering problems for ITER and they are presently identified as being made of high-Z material /2/.

The principal parameters of the device are given in Table 1 and representative plasma parameters are given in Table 2. A number of reference operational pulses have been developed /2,3/ ranging from a relatively short "ignition" scenario to the nominal steady-state, the preferred mode for the engineering test program during the technology phase of the experiments. A long-pulse, non-inductive current-driven controlled-burn, is perhaps the most probable mode. The initial physics phase of the operation will be

TABLE 1: MAIN PARAMETERS OF ITER DEVICE

Plasma major radius, R (m)	6.0
Plasma minor radius, a (m)	2.15
Elongation (at 95% flux surface)	2.0
Toroidal field on axis (at R = 6 m), B_T (T)	4.85
Maximum field at the TF winding, B_{max} (T)	11.2
Nominal plasma current, I_p (MA)	22 (= >28)
Nominal fusion power, P_{fus} (GW)	1 (= >2)
Neutral beams (~ 1.3 MeV for current drive)	75 MW
Lower hybrid at 6 GHz for current profile control.	45 MW
Electron cyclotron (140 GHz for profile control)	20 MW
ICRF in the frequency range 35 - 100 MHz	100 MW (option being considered)

TABLE 2: REPRESENTATIVE PLASMA PARAMETERS FOR IGNITION, STEADY-STATE AND LONG-PULSE SCENARIOS

Plasma parameter	Reference ignition	Nominal steady-state	Reference long-pulse
Plasma Current, I (MA)	22	18.9	15.4
Safety Factor, $q_\psi(95\%)$	3.0	3.5	4.4
$Q = P_{fus}/P_{aux}$	"ignited"*	6.6	7.8
Neutron Wall Load (MW/m^2)	1.0	0.69	0.8
H-factor for $ITER^{P89}$-Scaling, H_{IP}	2.0	2.1	2.2
Burn Time (s)	400	steady state	2500
$f_{alpha} = n_\alpha/n_e$ (%)	10	10	10
Z_{eff}	1.66	2.2	2.2
Fusion Power, P_{fus} (MW)	1080	750	860
CD Power, P_{CD} (MW)	0	113	110
Power Radiated, Total/Edge (MW)	102/35	76/27	185/95
Power into SOL, (MW)	116	187	98
Loop Voltage, V	0.12	0	0.045
$g_{Troyon} = \beta(\%)/(I/aB_o)$	2	3.0	2.7
Density, $\langle n_e \rangle$ (10^{20} m^{-3})	1.22	0.64	1.06
Density, $n_e(a)$ (10^{20} m^{-3})	0.35	0.18	0.3
Temperature, $\langle T_e \rangle = \langle T_i \rangle$ (keV)	10	20	11
Total Plasma Beta, β (%)	4.2	5.4	4.0
Poloidal Beta, β_p	0.62	1.1	1.4
Internal Inductance, l_i (3) †	0.65	0.65	0.65
Noninductive Current, I_{CD}/I (%)	0	71	30
Bootstrap Current, I_{bs}/I(%)	14	29	30

*Requirements for controlled burn may necessitate burn stability control by auxiliary heating feedback, corresponding to operation at Q ~ 30 – 50 (P_{aux} ~ 30 – 20 MW)

†l_i (3) is defined by $0.1\pi R_0 l_i I^2 = W_{in}$, with I in MA and W_{in} in MJ.

TABLE 1.1 - POSSIBLE OPERATING PHASES FOR ITER

Physics Phase						Technology Phase							
Pre-Technology Phase													
OPERATIONAL CONDITIONS		PLASMA OPTIMIZATION		IGNITION & DRIVEN OPERATION		CONCEPT PERFORMANCE TESTS		LONG-TERM CONCEPT VERIFICATION TESTS					
year 1	year 2	year 3	year 4	year 5	year 6	year 7	year 8	year 9	year 10	year 11	year 12	year 13	years 14 - 18
H/He	H/He	D/D/He	D/T	D/T	D/T	D/T	D/T	D/T	D/T	D/T	D/T	D/T	D/T
Initial ohmic operation; Full-field and heating systems tests		Physics studies; Steady-state studies; He-pumping; Current drive studies and profile optimization;		"Flash" ignition studies; α-particle studies; He ash removal; 200 s controlled burn; Driven operation		Short-term blanket sub-module tests including T-extraction; Surveillance tests of machine components;		Engineering equipment reliability data; Component reliability data; Blanket module performance tests; Fuel processing reliability data; Material irradiation experiments; Transient safety tests; Continued surveillance testing;				Segment tests	This phase can continue further if necessary
MHD tests for liquid metal blankets				Driver blanket & fuel processing system;									
		Divertor tests; Wall material study; Test blanket check-out; Neutronic tests											
Hands-on maintenance			Remote maintenance			Availability 5-10% Individual campaigns will usually last 1-2 years		Availability 15-20% Experimental campaigns include combinations of long-term tests (several years each) and short-term tests (~1 year)					

Fig. 2. The operating program planned for the ITER Device.

devoted to establishing the plasma parameters necessary for achieving ITER's technology goals.

Figure 2 shows a simplified chart of the operational plan. While one does not expect the program to have quite such a clean break between the physics phase and the technology phase but be rather more evolutionary, the plan points out key-issues such as that the repair and maintenance at the vacuum vessel will have to be done with remote-handling equipment. Also, the full ignition will be studied in the physics phase since the understanding of the central alpha-heating on the plasma behavior is key to the technology operation. Thus, it is apparent that all plasma diagnostics for the physics phase must function to specification in the highest radiation fluxes, even if some need not withstand long-term radiation damage effects in the integrated fluence of the technology phase. The size of penetrations that can be allowed through the blanket and shield modules close to the plasma will depend on the pulse-length scenarios chosen, because radiation damage and nuclear heating of the TF coils must be limited /4/.

Five of the horizontal access ports are available for diagnostics in the physics phase. A proposed arrangement of all the diagnostics described for this phase is shown in Fig. 3. This sketch is a projection onto the ITER equatorial plane of all the diagnostics, including those mounted on the top or viewing through the pumping access at the bottom. In order to maximize the blanket testing and tritium breeding in

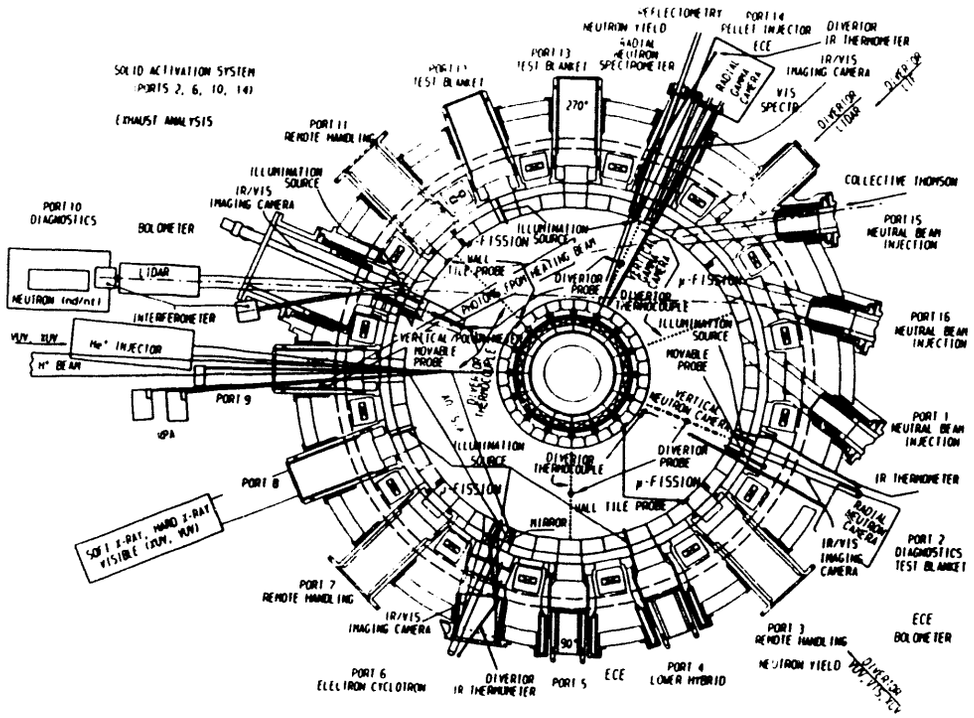

Fig. 3. Plan view of the ITER Device: it shows the projection onto the ITER equational plane of all the diagnostics proposed for the physics phase.

the later technology phase, only two horizontal access ports have been assigned for diagnostics. Diagnostics providing data for feedback control of heating, fuelling and current-drive, and potentially disruption control, will take precedence during this second phase. At this time the extreme difficulty of achieving the necessary diagnostic sightlines with such little access has been identified, but demonstration of a feasible diagnostic arrangement awaits the next ITER design phase.

III. Specifications for the Diagnostics

The need to understand the plasma behavior to produce the optimum long-pulse burning plasmas during the physics phase and the need to provide control capability, however speculative at this time in the areas of profile and disruption control, lead to defining the plasma parameters to be measured and setting specifications for the quality of measurement. The choice of diagnostic method and the specifications were set by diagnostic physicists, who are aware of the capability of techniques now in use or could speculate on the potential performance of a new diagnostic configuration in consultation with the ITER Physics Team, who were interested in optimizing the comparison with modelled plasma behavior and ensuring sufficient control data. These specifications, particularly those for spatial resolution and temporal sampling, impact

the selection of the diagnostic techniques and the interface through the vacuum boundary and blankets.

A set of diagnostics proposed for safety, control and performance measurement of the plasma is shown in Table 3 /1/. In addition to providing candidate diagnostics for measurement of the plasma parameters, the table provides short comments on issues that will have to be addressed in demonstrating that each technique is feasible for ITER. Some methods, shown in italics, are only being considered for the physics phase of the operation. In general, they provide good spatial resolution, but the restricted access for the technology phase makes their continuing implementation improbable. Hence a key aspect of the physics phase will be the correlation between diagnostics, so that the information from the later set can be used with confidence in control and understanding of the plasmas in the technology phase.

TABLE 3: DIAGNOSTICS FOR SAFETY, CONTROL AND PERFORMANCE

Plasma parameter	Candidate Diagnostics	Comments
1) Plasma Current	Magnetics	Need to develop methods of measuring steady-state fields
2) Plasma Position and Shape	Magnetics	See above
	Neutron Camera	Accuracy needs confirmation
3) q(r) (Current Density)	Magnetics	$l_i(t)$; see above
	Motional Stark Effect†	Needs diagnostic neutral beam
	Faraday rotation	Severe access limitations
	Reflectometry	Needs R&D to demonstrate feasibility
4) Electron Density	Interferometry	Line-averaged; limited chord number
	Thomson Scattering	$n_e(r)$; limited time points
	Reflectometry	$n_e(r)$; density fluctuations are issues
5) Ion/Electron Temperature	Neutron Spectrometry	Core plasma ($r < 2a/3$) at DT phase
	Neutral Particle Analysis	Plasma periphery; needs diagnostic neutral beam
	CHERS	Needs diagnostic neutral beam and radiation resistant optics
	Thomson Scattering	$T_e(r)$ profile; limited time points
	ECE	Suitable for T_e. Issues: harmonic overlap and supra-thermal emission
6) D/T Density	*Neutral Particle Analysis*	Edge plasma; improves with neutral beam
	Neutron Spectrometry	Core plasma; issue: S/N for DD neutrons
	Visible Spectroscopy	Edge plasma; needs radiation resistant optics
7) Fusion Power	Neutron Yield Monitor	Calibration methods need further development

TABLE 3 (Continued)

8) Confined Alpha-Particles	Collective Thomson Scattering	Needs validation on existing tokamaks and development of 1.5 THz radiation source
	CHERS	Needs diagnostic neutral beam
	Neutral Particle Analysis	Needs diagnostic neutral beam
9) Escaping Alpha-Particles	γ-Spectroscopy	Needs R&D to demonstrate feasibility
	Thermocouples	Slow response time
	Faraday Cups	Needs R&D to demonstrate feasibility
	Bolometers	Needs R&D to demonstrate feasibility
10) Divertor Plasma	*Visible Spectroscopy*	Needs radiation resistant optics
	Laser Induced Fluorescense	Needs R&D to demonstrate feasibility
	Langmuir Probes	Severe erosion problems
	Reflectometry	Complicated plasma geometry
11) Erosion Rate	*Visible Spectroscopy*	See above
	Tile Markers	Needs R&D to demonstrate feasibility
12) Heat Loads	Thermocouples	Slow response time
	IR/Visible Imaging Camera (for first wall)	Needs radiation resistant optics; access limitations
	IR Thermometer (for divertor view)	Needs radiation resistant optics; severe access limitations
13) Helium Concentration	*CHERS/NPA*	Needs dedicated neutral beam
	Residual Gas Analyzers	Relation to He density in the plasma is uncertain
14) Radiative Loss	Bolometers	Limited access; low S/N ratio
15) Impurity Content	*VUV Spectroscopy*	For divertor view; access problematic
	X-ray Spectroscopy	Issue: radiation hardening of crystals
	Visible Spectroscopy	Needs radiation resistant optics
16) Runaway Electrons	ECE	Suitable in principle; needs validation
	X-Ray Monitor	Analysis of likely capability is required
17) Disruption Precursors	Magnetics	Possible but not universal
	ECE	T_e fluctuations; uncertain
	Neutron Camera	n_i,T_i fluctuations; uncertain
	Bolometers	Radiation increase; not universal
18) Edge Localized Modes (ELMs)	D(T)-Light Monitor	Needs radiation resistant optics
	Reflectometry	Suitable in principle; needs validation
	Langmuir Probes	Severe erosion problems
	Magnetic Probes	Need probes with good time response

† Diagnostics shown *in italics* are additional ones for the physics phase

With the known capability of these diagnostic methods in present devices in mind, then the specifications for the accuracy, spatial resolution and temporal resolution for the key plasma measurements could be prepared. Some of the most precise requirements are driven by the expectation of using the signal outputs in feedback control for the long burn plasma pulses, and the extent of this need is clearly highly speculative at this time. A unique feature is a requirement that measurement of the divertor tile surface

temperatures be coupled to the tokamak safety circuits because of the disastrous consequence of severe material ablation.

Plasma current

Current range	Time resolution	Rate of change	Accuracy
0.1-28 MA	100 μs	5×10^5 A s^{-1} †	1%
		$<1 \times 10^9$ A s^{-1} *	~30%

† For normal operation.

* At current quench at a disruption.

The total plasma current measurement will be used in the feedback control of the inductive current drive and possibly in permissive interlocks for non-inductive current drive. The measurement is required throughout the full length of a one week burn pulse. The measurement will be done by a Rogowski coil and poloidal magnetic field sensors.

Plasma Position and Shape

Position/shape	Time resolution	Rate of change	Accuracy
R_{in}, R_{out}	100 μs	1 cm s^{-1} †	1 cm
R_x, Z_x	100 μs	1 cm s^{-1} †	1 cm
Z_c	100 μs	1 cm s^{-1} †	0.25 cm

† For normal operation.

R_{in} and R_{out} are the midplane positions of the inboard and outboard separatrix, respectively; R_x and Z_x are coordinates of the X-points, and Z_c is the vertical shift of the plasma center. The plasma position and shape measurements will be used in the control of the current in the relevant poloidal field coils. The measurement is required throughout the full length of a 1 week burn pulse. The measurements will be made using a variety of magnetic probes. Infra-red views of divertor plate surface temperatures, divertor thermocouples and neutron camera will also give data about up-down asymmetry.

Plasma Beta

Beta range	Time resolution	Rate of change	Accuracy
$0.01 < \beta_p < 3$	100 μs	0.05 s^{-1} †	3% at $\beta_p \sim 1$
		$< 1 \times 10^6$ s^{-1} *	~30%

† For normal conditions.

* At thermal quench of a disruption.

Beta will be measured by a diamagnetic loop and will also be derived from kinetic measurements.

Electron Density

	Density range	Spatial res.	Time res.	Accuracy
Core	1×10^{19} - 5×10^{20} m^{-3}	50 mm	1 ms	0%
Edge	1×10^{17} - 5×10^{19} m^{-3}	3 mm	1 ms	10%
X-point	1×10^{18} - 1×10^{21} m^{-3}	10 mm	1 ms	10%

The line integral density will be used for the control of the fuelling; it is also probable that a density profile measurement should be available for input to burn control. The system must have sufficient speed that it will be able to follow the density rise from pellet injection. Three methods are being considered to provide the necessary information. These are interferometry, LIDAR Thomson scattering with repetition rate ≤ 20 Hz, and reflectometry.

Electron temperature

	Temp. range	Spatial res.	Time res.	Accuracy
Core	0.5-40 keV	50 mm	10 ms	10%
Edge	5-500 eV	3 mm	10 ms	10%
X-point	5-200 eV	10 mm	10 ms	10%

The electron temperature may be used as in an interlock for launching of the fuelling pellets. Profile measurement may be used in the heating and burn control. The selected methods are LIDAR Thomson scattering with repetition rate ≤ 20 Hz and electron cyclotron emission. Langmuir probes are required for the edge region. The x-point region may require special techniques, for example electron cyclotron absorption (ECA) if suitable access is available.

Ion temperature

	Temp. range	Spatial res.	Time res.	Accuracy
Core	0.5 - 50 keV	0.15 m	1 ms	10%
X-point	0.2 - 2 keV	10 mm	1 ms	10%

The central ion temperature may be used for burn control. The preferred measurement methods are neutron spectroscopy and flux measurement for the central region and charge-exchange recombination spectroscopy (requiring a modulated 4 MW, 100 keV diagnostic hydrogen beam) for the full profile. Visible spectroscopy is required for the ion temperature and flow in the divertor region.

Impurity content, fuel depletion and radiated power

Parameter	Time res.	Spatial res.	Accuracy
Z_{eff}	1 ms	10 cm	20%
Low-Z impurities	10 ms	10 cm	20% †
High-Z impurities	100 ms	20 cm	20% †
Total radiation	10 ms	10 cm	20%
n_d/n_t	100 ms	-	20%
n_{He}/n_d	100 ms	-	20%

† The numbers presented are dependent on the quantities of impurities present.

The ratio n_d/n_t is required as a fuelling control signal. The helium ash concentration may be of importance in burn control. Visible bremsstrahlung detection will provide information on the Z_{eff}; visible spectrometers and a double crystal X-ray spectrometer will provide data on low-Z and high-Z impurities respectively. Bolometer arrays will measure the radiated power. The ratios of n_d/n_t will be provided spectroscopically and/or via charge exchange neutral particle analysis at the edge and by neutron spectroscopy in the core. The helium "ash" will be detected by a charge exchange recombination spectrometer (with its associated diagnostic beam). Exhaust gas analysis will provide overall particle balance information.

$q_\psi(r)$ (plasma current density)

Range of q	Spatial res.	Time res.	Accuracy
$0.6 < q_\psi(r) < 5$	0.15 m	10 ms	10%

The measurement of q(r) may be used in the control of the non-inductive current drive systems. The preferred methods are spectroscopic measurement of the motional Stark effect, making use of the same diagnostic beam as that required for ion temperature measurement, and Faraday rotation using the interferometer sightlines.

Fusion products

Parameter	Parameter range	Time res.	Accuracy
Total neutron flux	1×10^{11}-1×10^{21} n s^{-1}	100 ms	15% (10% rel.)
Fusion power	$1 - 3 \times 10^3$ MW	100 ms	15% (10% rel.)
Neutron fluence	Many activation locations	-	10%
Alpha-source region	a/10 spatial res.	100 ms	~3%
D-He^3 reaction rate	a/10 spatial res.	100 ms	10%
Escaping α-particles	-	10 μs	-
Confined α diagnostics	$1 < E_\alpha < 3.5$ MeV 2 positions	1 s	TBD*

† Physics phase only.
* To be determined.

The total neutron flux, which gives the total fusion power, will be used in the burn control. Various neutron detectors will be used for the measurement of the neutron flux, fluence and source region. A gamma-detection system will provide the D-^{3}He reaction rate during the physics phase and will supplement the neutron measurements in the ignited phase. Escaping alpha particle studies are desirable utilizing scintillators on moveable probes or integrated wall-samples. A forward scattering system is planned for the high-energy confined particles. Charge exchange recombination spectroscopy (with the associated diagnostic neutral beam) will be used for the slowing down confined particles. Neutral particle analysis (with a modulated 1 MW, 100 keV helium neutral beam) may be used for the outer part of the plasma (r/a>0.5) for alpha-particle energies up to 1.5 MeV.

Fluctuations

Fluctuating parameter	Max. frequency	Spatial res.	Accuracy
MHD	> 60 kHz	10 cm (for T_e ,T_i)	10%
Edge MHD	> 60 kHz	-	30%
n_e fluctuations	> 60 kHz	10 cm	10%

The measurement of MHD fluctuations will potentially provide precursor signals which may be of use in preventing damaging disruptions. MHD fluctuations will be measured by internal magnetic coils, by electron cyclotron emission detection and by neutron systems. Information on density fluctuations will be obtained by reflectometry. D_α filterscopes will be used for edge light fluctuations (ELMs).

Edge, Divertor and First Wall

Parameter	Requirement
Surface temperature	$T \geq 200^oC$, 5 cm resolution, 10 ms rise-time.
Erosion studies	TBD
Pressure measurement	TBD, partial pressures

The surface temperature of the first wall and of the divertor plates will be measured at four and three locations, respectively, using infra-red detectors. Though important for the machine safety, as yet no satisfactory solution was found for real-time monitoring of the full divertor plate surface. Erosion will be measured spectroscopically with markers in selected tiles. Pressure and partial pressure will be measured in a pumping duct and close to the vacuum vessel.

This diagnostic list and the specifications set down for each plasma measurement provide a starting point for the investigation of the next ITER design phase, the

Engineering Design Activity (EDA). Very detailed studies of the accessibility to the plasma, the ability of components to withstand the environment and, indeed, of the physics of the proposed techniques for the ITER plasma size and plasma parameters, will have to be made to refine the choice of methods and to define the necessary Research and Development Programs. In parallel, engineering analysis will have to be pursued to provide space and sight-lines for this large array of diagnostics.

IV. Conceptual Designs

Of the large collection of conceptual designs presented at the ITER Workshop, and for which some reasonably detailed analyses had been made /1/, only three examples will be discussed here. The intent is to show a number of the issues with which diagnostic physicists will have to contend in providing an instrumentation capability.

The first example is an array of neutron (and gamma-ray) profile monitors providing a two-dimensional camera for determining the radial dependence of the neutron yield (and hence alpha-particle birth region) as a function of time, and by inference for predominantly thermal plasmas, the ion temperature as a function of space and time. Figure 4 shows large shielded camera structures with shielding three to seven meters thick mounted on top of, and at a horizontal port of the tokamak. To ensure that the direct neutrons are not obscured by scattering, narrow collimating

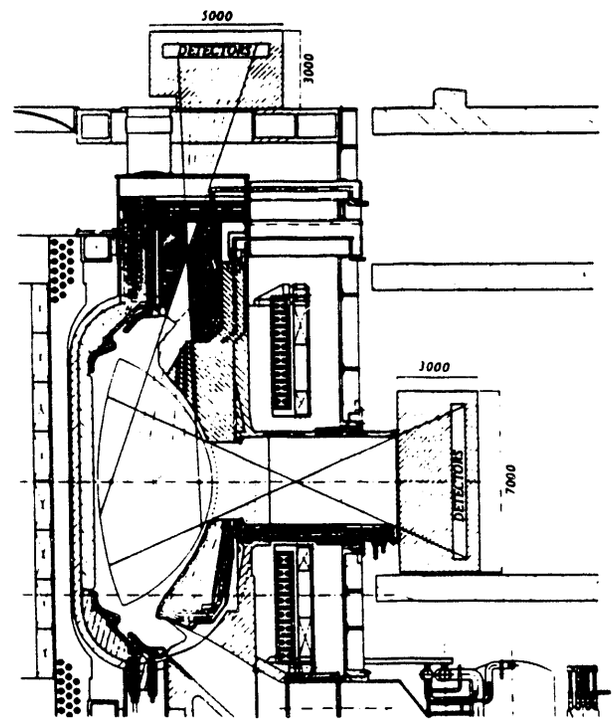

Fig. 4. An illustration of the collimation and shielding structures necessary to allow spatially resolved neutron measurement.

passages are required through the shielding. Shielding with matching passages must be provided inside the port structure to retain the spatial definition while also ensuring that neutrons cannot stream locally onto the toroidal field coils. In this figure also, some passages, about 100 mm wide in the toroidal direction, have been engineered into the edge of the blanket module to allow full radial profile measurement by the vertical camera. At the vacuum boundary the steel in the lines of sight must be locally thinned to reduce scattering. The engineering tolerances for numerous parts of the tokamak that have to line up to optimize the signal intensity and the spatial resolution, while preserving its structural integrity will be very difficult to meet. The selection of detectors and instrumental design with sufficient sensitivity to provide data over a wide range of neutron fluxes with these geometrical constraints will be part of the development program.

The second example is for an array of electron cyclotron emission waveguides to be used in the measurement of the electron temperature and its fluctuations. The measurement instruments which can be in a distant well-shielded area because of the good waveguide transmission properties, will be Michelson interferometers, fixed-frequency heterodyne radiometers and possibly grating polychromators. The instruments can be relatively conventional. Figure 5 shows the proposed arrangement

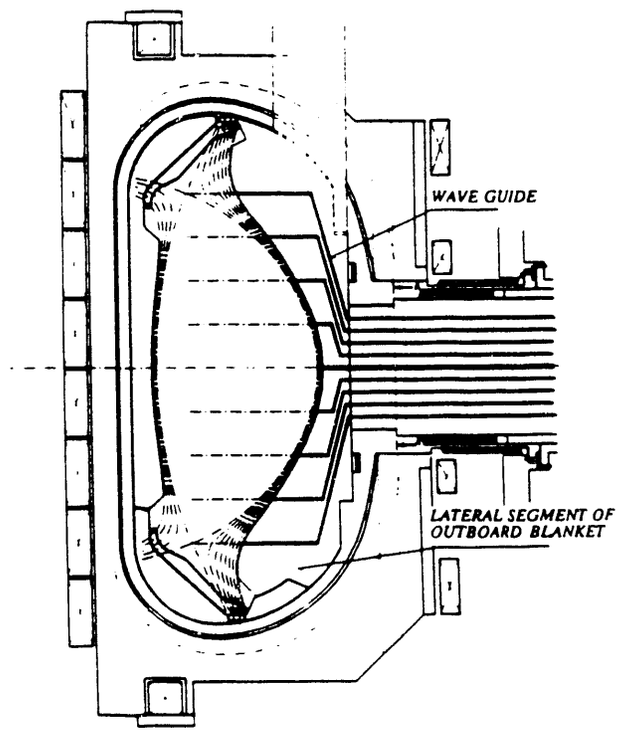

Fig. 5. Proposed arrangement of ECE waveguides for spatial profile measurements.

of the in-vessel waveguides and antennas, presently planned to have an O-mode and E-mode system at each vertical location and for the whole array to be repeated at three toroidal locations. The design issues relate to the penetration of oversized waveguide of typical dimensions 40×50 mm^2 through the narrow gap between blanket modules. The presently specified gap, for minimizing neutron streaming to the coils, is 20 mm but narrow grooves could be cut in the containment steel of the modules. However, the guides are very long, require many reflecting corners, and must operate at high temperature. The quartz windows at the vacuum boundary can be out of the line of sight of direct-neutron streaming but alignment across that boundary must be rigidly maintained. A critical issue to be resolved is that of calibration since a hot source will have to be moved from horn-to-horn to keep the system independently calibrated and techniques for doing this remotely under vacuum will require considerable ingenuity.

The third and final example is shown to indicate a possible solution to the problem of observing a large fraction of the plasma cross-section for a diagnostic dependent on visible-light collection. Figure 6 gives some idea of the size of a mirror, or array of mirrors, the labyrinth of shielding necessary to protect the window and the

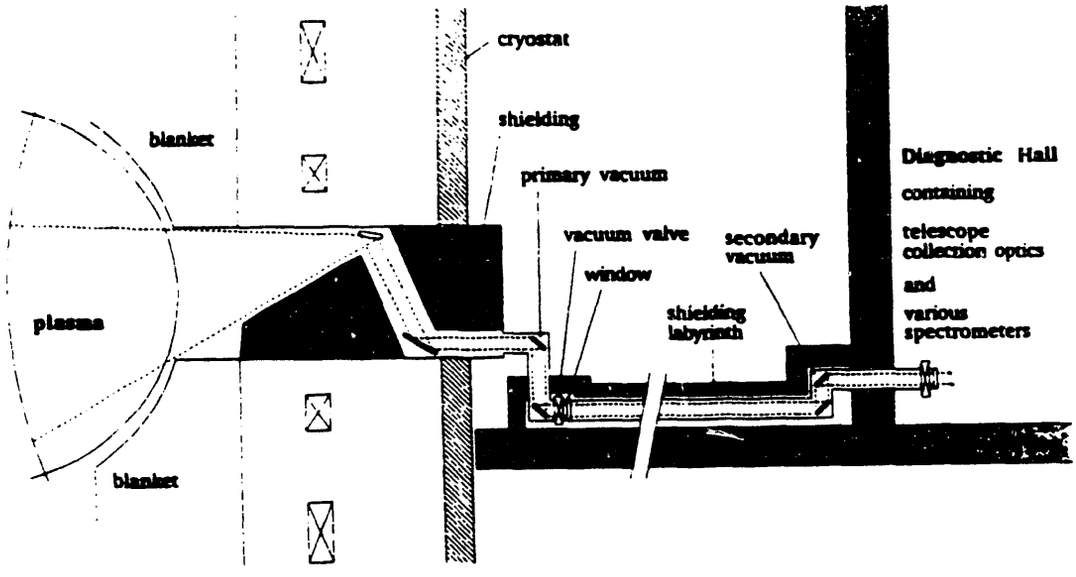

Fig. 6. A conceptual design of a mirror arrangement to give a wide-angle view of the plasma for an optical diagnostic. An optical path through labyrinthine shielding to the optical instruments is also shown.

shielding likely to be necessary to protect the instrumentation in an accessible shielded room. A similar arrangement with vacuum piping and without the window could transmit XUV light for spectroscopy. This concept limits the vertical view because the first parabolic mirror is far removed from the plasma to reduce coating and thermal effects. A full study will have to be done to determine how serious these effects are. The tolerance of mirrors to high radiation fluences must also be determined. The gap in shielding in the toroidal direction, particularly for an equivalent system viewing the divertor region, could be as little as 200 mm and make use of the gap provided between blanket modules.

V. Research and Development Requirements

At this early design stage, it is already possible to identify a number of issues for which research and development is necessary. Some have already been noted in Section IV. Critical diagnostic components will be mounted very close to the plasma. They will be mounted off internal vacuum vessel structures in the high neutron flux region, with intense heating from the plasma. They must be integrated tightly into the blanket and shielding structures. Magnetic coils, mirrors and their stabilizing structures and electrical isolation will have to both survive and retain their integrity throughout the plasma pulses if the measurement and control is to be provided. Table 4 shows some key environmental conditions. The fluxes, and fluences, of high energy gamma photons are very similar to those of the neutrons. For the sake of comparison the highest design neutron flux for magnetic diagnostics at TFTR was 6×10^{13} n cm^{-2} s^{-1} and the fluence was 2×10^{17} n cm^{-2}. Their temperature during operation is close to room temperature /5/.

TABLE 4: RELEVANT ENVIRONMENTAL INFORMATION AT DIAGNOSTIC LOCATIONS

Neutron flux at first wall	2.5×10^{14} n cm^{-2} s^{-1}
Neutron fluence at first wall through the technology phase	2.0×10^{22} n cm^{-2}
Neutron flux outside cryostat	2.0×10^{5} n cm^{-2} s^{-1}
Neutron fluence outside cryostat through the technology phase	1.8×10^{13} n cm^{-2}
Neutron flux at axis of horizontal 10 cm diameter cylindrical penetration 1.6 m from entrance	1.5×10^{11} n cm^{-2} s^{-1}
Neutral particle flux in energy range 100 - 200 eV	10^{16} - 10^{17} atoms cm^{-2} s^{-1}
Temperature of first wall	1000 - 1800 °C
Bakeout temperature for plasma-facing components	350 °C for 20 hours
Bakeout temperatuure of other components in vacuo	180 °C
Stray vertical magnetic field at R = 28.7 m on horizontal mid-plane at end-of-burn for I_p = 22 MA	0.04 T
Very high stray magnetic fields at start of discharge	
Double vacuum barriers between primary vacuum and atmosphere; at least one barrier must be welded.	

These numbers show the importance of a radiation effects program for diagnostic components. The more usual form of testing for material property damage by long-term exposure of components in a reactor core must be supplemented by study of transient effects by in-situ measurement of the component. Induced conductivity in dielectrics could provide intolerable noise backgrounds on electrical signals and fluorescence or transient absorption could be significant for optical components /6/, particularly for fiberoptics which would probably be further away, and behind some level of shielding. Changes in physical dimension of materials in high neutron fluences may not be acceptable for windows or vacuum electrical feedthroughs, so that a coupled design and testing program must be put together based on locating, and shielding, sensitive windows, according to a demonstrated radiation tolerance level.

It is clear too that very extensive development of new diagnostic methods, new components for established techniques (for example for operation at a higher frequency) and methods for checking calibration over long operation periods will be required. These needs will quickly become better defined as the Engineering Design Activity progresses, and more experts consider the design needs. An initial attempt at defining these requirements has been prepared and is published as an ITER internal document /7/. The main elements of the program are summarized in Table 5.

VI. Summary and Acknowledgements

The contributions of a large number of people from all four home party organizations contributed to a very detailed conceptual design of the diagnostic systems for ITER. These people contributed their knowledge from experience on the major tokamaks worldwide. The design has many flaws, which can only be remedied by further study and extensive development, but it has the strength of a very sound basis from which to develop. At present, for example, the preferred viewing sightlines of many diagnostics cannot be provided within the reference tokamak design. The full impact of the needs of radiation shielding and remote handling have not been adequately addressed. The demands of the physics program and for input to the plasma control lead to diagnostics affecting the design of every major component of the tokamak. They also place a major challenge for the skills of the diagnostic developer.

This design effort has made very visible to the community, who feel that plasma diagnostics can be thought of as the final addendum to a tokamak construction, that diagnostic design must be integrated into the overall planning at the very start.

I have been fortunate in being asked to prepare this paper. I am extremely grateful to my sixty-eight co-authors of reference 1 and to D. Post who led the ITER

Physics Team and worked very hard to promote the importance of plasma diagnostics within the ITER organization.

This work was supported by U.S. Department of Energy Contract No. DE-AC02-76-CJO3073.

TABLE 5: SUMMARY OF MAIN COMPONENTS OF THE DIAGNOSTIC RESEARCH AND DEVELOPMENT PLAN

Radiation Effects on Components	Develop vacuum windows for diagnostics Develop reflectors for diagnostics Radiation sensitivity of ceramics Radiation properties of fiber optics Radiation hard dispersive and reflective methods Data-base development for components in high radiation fields Radiation capability of cabling Radiation sensitivity of specific diagnostic hardware
New and Significantly Modified Diagnostic Methods	New fusion product techniques Dual-polarization reflectometry for electron density and magnetic field profile studies Source for collective scattering of fast ions
New Calibration methods	In-situ calibration technique for 14 MeV neutrons Hot source calibration of the ECE diagnostics
New Diagnostic Components	Many examples are given in the Plan /7/
Studies of New Methods on Operating Fusion Experiments	Provides funding to operating groups for installation of test diagnostic equipment on their devices
Development of Diagnostic Computer Codes	Neutron transport codes Analysis codes for the magnetic diagnostics Interpretive Diagnostic Codes
Development of Computer Methods for Real-Time Data-Handling	
Reliability Studies of Operating Equipment	

References

/1/ V. Mukhovatov, H. Hopman, S. Yamamoto, K. M. Young et al., "ITER Diagnostics," ITER Documentation Series #33 (IAEA, Vienna, Austria, 1991) and V. Mukhovatov, H. Hopman, G. W. Pacher, S. Yamamoto et al., Proceedings of Thirteenth International Conference on Plasma Physics and Controlled Nuclear Fusion Research Paper IAEA-CN-53/F-3-17 (IAEA, Vienna, 1991).

/2/ D. E. Post, K. Borass, J. D. Callen, S. Cohen et al., "ITER Physics," ITER Documentation Series # 21 (IAEA, Vienna, Austria, 1991).

/3/ G. W. Pacher, D. Post, E. Salpietro, G. Shatalov et al., "ITER Operations and Research Program," ITER Documentation Series # 23 (IAEA, Vienna, Austria, 1991).

/4/ Engineering aspects of the ITER Device are summarized in "ITER Conceptual Design Report," ITER Documentation Series # 18 (IAEA, Vienna, Austria, 1991). More details are given in specialist reports within this ITER Documentation Series.

/5/ K. M. Young, IEEE Trans. Nucl. Science NS-29, 888 (1982).

/6/ E. J. Friebele, et al., Opt. Materials in Radiation Environments, SPIE Vol. 451, 70 (1985).

/7/ Plan for ITER-Related Plasma Diagnostic R&D During the Detailed Design Phase 1991-1995, ITER Document ITER-TN-PH-0-4 (1990).

END

DATE FILMED

11/25/91