BATTELLE-NORTHWEST
RECEIVED
AUG 6 1969
CIRCULATING COPY
TECHNICAL INFORMATION

BNWL-1117
UC-70

2 —
7-69

WASTE SOLIDIFICATION ENGINEERING PROTOTYPES, DESIGN VERIFICATION TESTING OF SPRAY SOLIDIFICATION EQUIPMENT

July 1969

2

AEC RESEARCH & DEVELOPMENT REPORT

REQUESTED	PLACE	LOCATION	FILES ROUTE DATE

BNWL-1117

BATTELLE NORTHWEST
BATTELLE MEMORIAL INSTITUTE PACIFIC NORTHWEST LABORATORY
BATTELLE BOULEVARD, P. O. BOX 999, RICHLAND, WASHINGTON 99352

LEGAL NOTICE

This report was prepared as an account of Government sponsored work. Neither the United States, nor the Commission, nor any person acting on behalf of the Commission:

A. Makes any warranty or representation, expressed or implied, with respect to the accuracy, completeness, or usefulness of the information contained in this report, or that the use of any information, apparatus, method, or process disclosed in this report may not infringe privately owned rights; or

B. Assumes any liabilities with respect to the use of, or for damages resulting from the use of any information, apparatus, method, or process disclosed in this report.

As used in the above, "person acting on behalf of the Commission" includes any employee or contractor of the Commission, or employee of such contractor, to the extent that such employee or contractor of the Commission, or employee of such contractor prepares, disseminates, or provides access to, any information pursuant to his employment or contract with the Commission, or his employment with such contractor.

PACIFIC NORTHWEST LABORATORY
RICHLAND, WASHINGTON
operated by
BATTELLE MEMORIAL INSTITUTE
for the
UNITED STATES ATOMIC ENERGY COMMISSION UNDER CONTRACT AT(45-1)-1830

AEC-RL RICHLAND, WASH.

3 3679 00048 4644

BNWL-1117

UC-70, Waste Disposal
and Processing

WASTE SOLIDIFICATION ENGINEERING PROTOTYPES, DESIGN VERIFICATION TESTING OF SPRAY SOLIDIFICATION EQUIPMENT

By

J. D. Moore

Chemical Technology Department
Chemistry and Metallurgy Division

July 1969

69

BATTELLE MEMORIAL INSTITUTE
PACIFIC NORTHWEST LABORATORY
RICHLAND, WASHINGTON 99352

Printed in the United States of America
Available from
Clearinghouse for Federal Scientific and Technical Information
National Bureau of Standards, U.S. Department of Commerce
Springfield, Virginia 22151
Price: Printed Copy $3.00; Microfiche $0.65

WASTE SOLIDIFICATION ENGINEERING PROTOTYPES DESIGN VERIFICATION TESTING OF SPRAY SOLIDIFICATION EQUIPMENT

J. D. Moore

ABSTRACT

WSEP Spray Solidification equipment which will ultimately be used for reducing liquid high-level radioactive waste to rock-like solids was tested in a series of runs with nonradioactive simulated wastes. Operable feed compositions for two Purex-type wastes were developed. Performance of each solidifier component was analyzed. Minor design changes were made and the equipment was commissioned for radioactive service. Spray solidifier operating procedures and operating limits were defined.

CONTENTS

FIGURES vii
TABLES. vii
INTRODUCTION 1
SUMMARY AND CONCLUSIONS 3
PROCESS AND EQUIPMENT DESCRIPTION 4
General Description of WSEP. 4
Spray Solidification Process 7
History 7
Process Description 7
Equipment Description. 9
FEED COMPOSITION DEVELOPMENT 19
Waste Compositions 19
Feed Additives 19
PW-1 23
PW-2 27
Product Solubility 28
Melt Corrosion Tests 30
DISCUSSION OF DVT'S 35
APPENDIX - DETAILED RUN SUMMARIES 45
Run CSC-1 45
Run CSC-2 49
Run CSCM-3 52
Run CSCM-4 56
Run CSCM-5 58
Run CSCM-6 61
Run CSCM-7 64
Run CSCM-8 67
Run CSCM-9 73
Run C 76
REFERENCES 81
ACKNOWLEDGEMENTS 84

LIST OF FIGURES

1	Waste Solidification Engineering Prototypes	5
2	Spray Solidification Equipment in WSEP	8
3	Spray Calciner Assembly	10
4	Continuous Melter Assembly, Spray Solidification	12
5	Melt Container and Fill Head Joint	14
6	Spray Solidification Waste Storage Pot	15
7	Induction Furnace Assembly	17
8	Na_2O: PW-1: P_2O_5 Melting Point Isotherms	25
9	Effect of Time and Melt Temperatures on Sulfate Retention	29
10	Leach Rates of Spray Solidification Products	31
11	Spray Solidification Equipment Arrangement for Runs CSC-1 and CSC-2	46
12	Schematic Equipment Arrangement for CSC-1	47
13	Schematic Equipment Arrangement for CSC-2	50
14	WSEP Spray Solidifier Installed in B-Cell	68
15	View into Corroded WSEP Melter	72

LIST OF TABLES

1	Composition of Simulated Waste Solutions	20
2	Additives to Waste Solutions	21
3	Melting and Stick Points of PW-1 With Added Phosphoric Acid	23
4	PW-1 and PW-2 Melt Corrosion Tests	32
5	Spray Solidifier Design Verification Tests - Summary	36

WASTE SOLIDIFICATION ENGINEERING PROTOTYPES DESIGN VERIFICATION TESTING OF SPRAY SOLIDIFICATION EQUIPMENT

J. D. Moore

INTRODUCTION

High-level radioactive wastes generated from nuclear fuels reprocessing are currently stored as liquid solutions in underground tanks. As the nuclear industry expands and the volume of waste increases, liquid storage requirements will become more complex and the probability of ground-water contamination from a tank rupture will increase. Waste concentrated in an immobile solid offers the advantages of a large storage volume reduction and a much lower probability of environmental contamination.

The Waste Solidification Engineering Prototypes (WSEP), consisting of production-scale equipment located at the Pacific Northwest Laboratory (PNL), is capable of testing three different processes for solidifying high-level radioactive waste. The Spray Solidification Process for high-level waste, developed by Battelle-Northwest (BNW) at the Pacific Northwest Laboratory, converts liquid waste to a rock-like solid by means of spray-drying and high-temperature melting. The Phosphate Glass Process is being developed at Brookhaven National Laboratory in pilot plant studies using nonradioactive feed.[1] Oak Ridge National Laboratory engineers developed a process for calcination of waste to a dry cake in the storage pot.[2] All three processes are currently being tested in the WSEP with high-level radioactive waste feed. Before this was done, the prototype equipment was tested for operability in a series of runs using nonradioactive feeds. Design verification tests (DVT's) on the prototype phosphate glass solidification and the WSEP pot calcination equipment have also been performed by BNW.[3,4]

The objectives of the spray solidification design verification tests were (1) to analyze the equipment performance in runs with nonradioactive simulated wastes to determine its suitability for radioactive testing, and to make design modifications if necessary; (2) to establish the best equipment operating procedures to be used in future radioactive runs; and (3) to define the operating limits at which the spray solidifier could be run. Since the two WSEP standard waste compositions were established just as the DVT's began, laboratory studies were started to find chemical additives necessary to convert the wastes to solid products. The feeds developed in the laboratory were to be tested in the spray solidifier DVT's. The results of the DVT's with the WSEP spray solidification equipment and the associated laboratory work, are reported here.

SUMMARY AND CONCLUSIONS

WSEP spray solidification equipment performance was demonstrated and operating procedures were developed in a series of 10 design verification tests (DVT'S). Most of the equipment operated satisfactorily, but feed was not atomized adequately by the spray nozzle, and the melter discharge valve heaters were not reliable. These equipment problems were solved later during the WSEP radioactive demonstration.

Sulfate-free (PW-1) and sulfate-containing (PW-2) wastes with phosphate fluxing additives were satisfactorily processed in the spray solidifier. Addition of alkali metals and phosphoric acid to both waste types lowered the melting points into the temperature range (<950 °C for PW-1 and <800 °C for PW-2) desired for melter operation. Greater than 96 percent of the feed sulfate was retained in the PW-2 product when the melt temperature was maintained below 850 °C. About 2/3 of the ruthenium was volatilized from the PW-2 feed to the off-gas condensate.

The spray solidifier capacity is 28 liters/hr of aqueous feed, or equivalent to 1.5 tonnes of uranium/day with PW-1 feed. With PW-2, the maximum solidification rate is limited to 21 liters/hr of aqueous feed, or 0.83 tonnes of uranium/day.

Proper feed atomization quality could not be obtained with external-mix spray nozzles. With this nozzle type, air atomization of feed was better than that obtained with superheated steam, but neither gas produced a spray free of coarse droplets. After completion of the DVT's, tests with an internal-mix nozzle showed that scale did not form on the calciner walls with this nozzle type.

Calcine de-entrainment factors greater than 500 were obtained with the sintered stainless steel calciner filters. The filters resisted corrosion and thermal and mechanical shock during the 300 hours of testing.

PW-1 and Pw-2 phosphate calcines were fused in platinum and platinum—0.5% rhodium melter vessels at temperatures up to 1200 °C. Metallic objects such as stainless steel must be kept out of the vessel during processing to prevent platinum corrosion. Liquid level in the melter is best determined by visual observation and by internal temperature readings. Melt can be drained from melter vessels through freeze valves or externally-mounted weirs. A discharge valve heater more reliable than the resistance furnaces tested was needed.

PW-2 melt can be collected in carbon steel storage pots by slow drip-wise and rapid batch filling with pot wall temperatures up to 700 °C. PW-1 melt must be collected in stainless steel pots at pot wall temperatures less than 950 °C if continuous drip filling is used.

Both induction and resistance-heated furnaces provide satisfactory heating for calcination and melt collection.

Air leakage into the solidifier vent must be kept below 8 standard cubic feet per minute (scfm) to maintain a negative pressure on the calciner during filter blow-back. Major sources of leakage are in the melter sample chamber and the melter solids feeder. Minor changes in the vent system will provide adequate vacuum to offset the leakage into the spray solidifier.

PROCESS AND EQUIPMENT DESCRIPTION

GENERAL DESCRIPTION OF WSEP

WSEP is designed to solidify the amount of waste generated from a plant processing approximately one tonne of uranium fuel per day. Figure 1 is a simplified flow diagram of WSEP. Detailed design features were documented by Schneider and Kelly.[5]

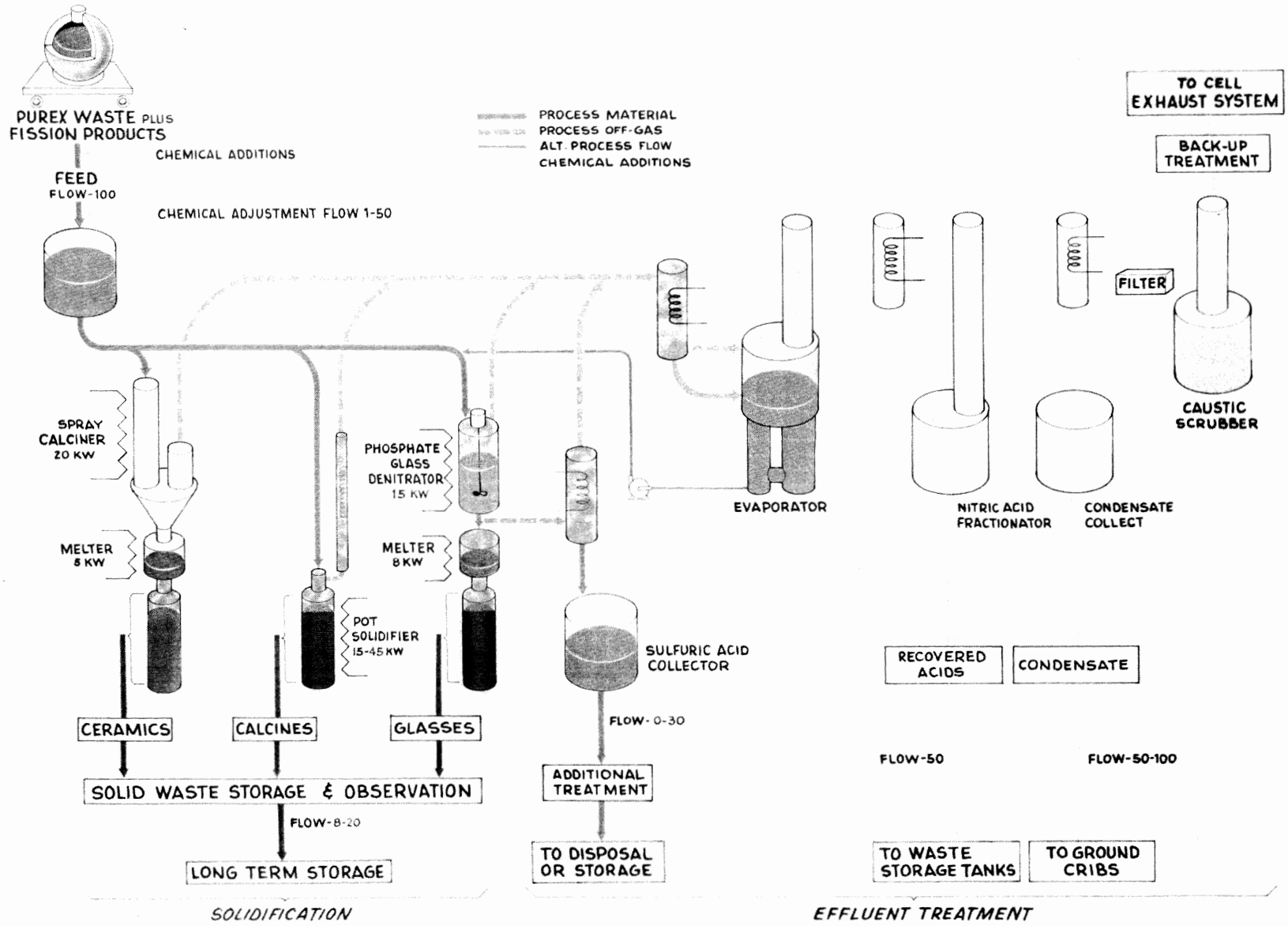

Neg 0680979-2

FIGURE 1. Waste Solidification Engineering Prototypes

Raw aqueous waste solutions are shipped in sealed casks from the Hanford processing plant to the WSEP receiving station. Here the waste is transferred to a digester or evaporator where the solution is boiled to concentrate the waste to a suitable volume for the feed batch and to destroy any trace of organics. Nonradioactive chemicals are then added to the waste concentrate to adjust the solution composition to the desired feed specifications. Feed can be pumped to any of the three solidifiers in WSEP from the evaporator or the feed tank. Solidifier off-gas is condensed and collected or routed to the evaporator where the acid condensate is concentrated. Aerosols are removed from the evaporator vapors and further decontamination is obtained by condensation and collection in the acid fractionator. The fractionator vapors are condensed and collected as a disposable low-level radioactive water stream. Noncondensible gases are filtered and scrubbed with caustic, then passed through two additional filtration stages before discharge to the atmosphere. Recovered nitric acid in the fractionator can be returned to the processing plant for further use. Calcine or melt product is collected in 8 or 12 in. diameter storage pots 8 ft in length. After filling, the pots are welded shut and stored for further observations of internal temperatures and pot corrosion resistance. Since the off-gas decontamination and acid recovery systems are common to all three solidifiers, only one solidifier may be run at one time.

The equipment is constructed on "plug-in" racks to facilitate replacement and maintenance by remote handling in the hot cell. The solidifiers are located in front of two cell windows, and are accessible by means of master-slave manipulators and/or the in-cell cranes. Service lines are inserted in clusters through "plugs" in the cell wall.

SPRAY SOLIDIFICATION PROCESS

History

The development of a spray drying process in which the feed is dried by radiant heat from the spray chamber walls rather than from a heated secondary stream of gas, was carried out in 1949 when spray decomposition of uranyl nitrate was investigated by Allen[6] at the Oak Ridge National Laboratory. A similar process for treatment of industrial wastes and sewage was developed by Gauvin and co-workers[7] at the Pulp and Paper Research Institute of Canada.

Allemann and Johnson[8] of BNW began experiments to adapt the process for calcination of radioactive waste in 1959. Further development was carried out with production-scale equipment using nonradioactive feed solutions.[9] At this time, a continuous melter was added to the spray calciner to form glassy or rock-like products. Spray solidification experiments using actual radioactive wastes were performed in laboratory scale equipment by BNW in 1964.[10]

Process Description

Spray solidification converts liquid radioactive waste to a solid by spray calcination and fusion of the calcine to a rock-like product. Figure 2 is a schematic diagram of the process. Chemically adjusted liquid waste is sprayed into the top of the heated calciner chamber through a two-fluid nozzle. Steam or air is used as an atomizing gas. The spray droplets are dried to a fine powder which is swept down the calciner chamber and up to the off-gas filters. Powder collects on the filters and the cake is periodically blown off by pulses of high pressure steam directed back through the filters. The filtered off-gases are condensed and collected or concentrated. The powder is blown off the filters into a melter where solid

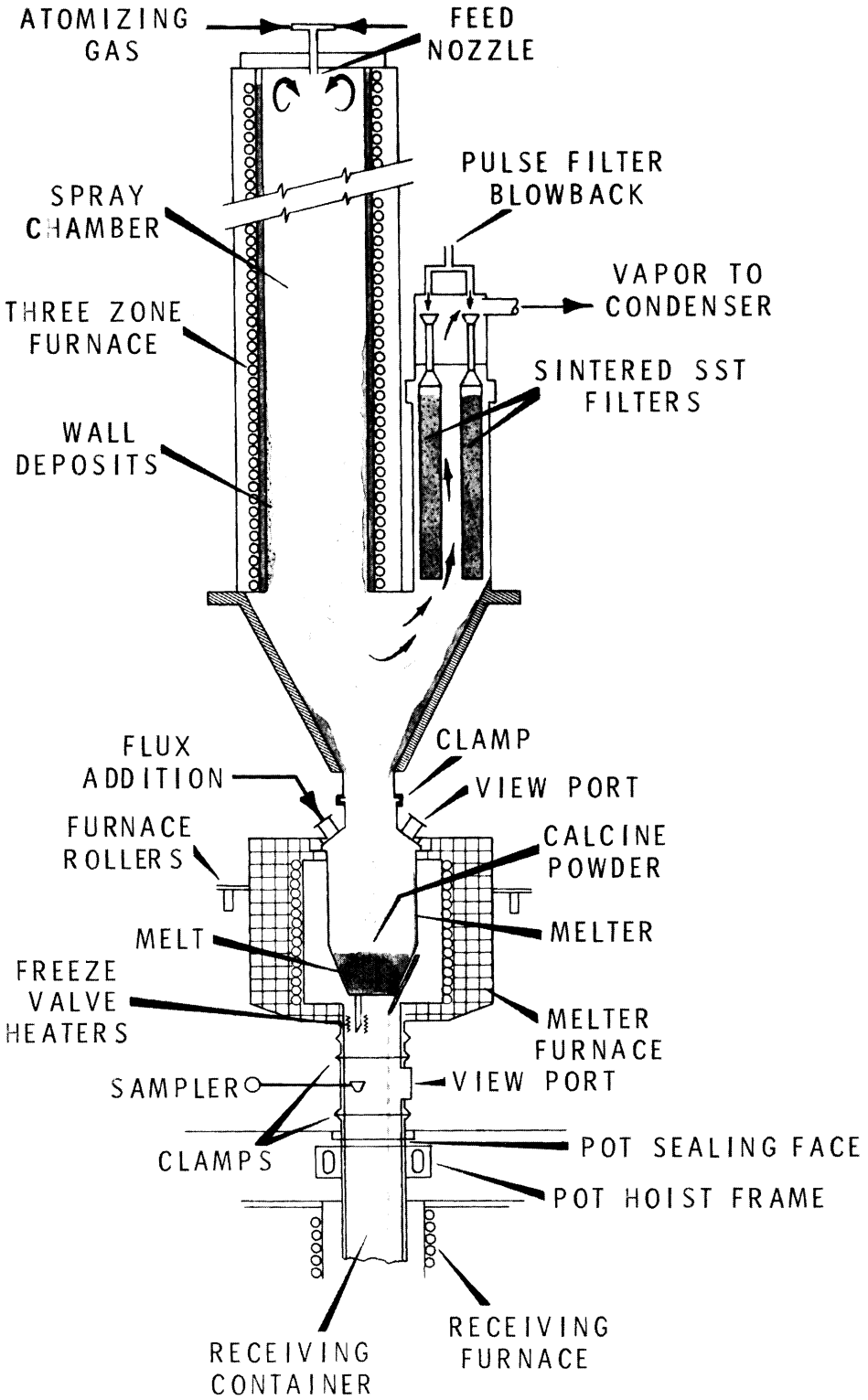

Neg 0660170-5

FIGURE 2. Spray Solidification Equipment in WSEP

flux may be added to form a melt. The molten waste is discharged from the melter either in batches or by continuous drips. Melt is collected in a heated pot which is cooled after filling and sealed for storage.

Equipment Description

The WSEP spray solidifier consists of three basic components, the calciner, the melter, and the product storage pot. The calciner, shown in Figure 3, consists of a cylindrical drying chamber 6 1/2 ft long by 13 1/4 in. ID. In the first four DVT's, the chamber walls were heated with a three-zone induction-heated furnace which was replaced with a 45 kW, three-zone resistance furnace for the final six runs. Calciner furnace temperatures, set at about 700 °C, were slightly below the sinter or melt points of the calcined feed. Feed was sprayed into the top of the calciner through an external-mix, commercial two-fluid nozzle (Spraying Systems Co., Set-up No.5). The nozzle was welded to a mounting flange which could be removed from the calciner. A bellows-actuated clean-out needle on top of the nozzle was used to clear plugs from the nozzle liquid passage. Powder deposits in the calciner were dislodged with an air cylinder-driven hammer mounted on the top flange of the calciner. The hammer was later replaced with an air-operated, free-floating piston vibrator requiring much less maintenance than the hammer.

Below the drying chamber, an insulated conical chamber funnels the powder into the melter. Powder is removed from the calciner off-gases by 15 tubular porous stainless steel filters mounted in an oval-shaped chamber next to the calciner furnace. The filters are cleaned three at a time by sharp impulses of steam or air directed back through the venturi-shaped filter exhaust lines. Blow-back pulse frequency is controlled by an automatic timer actuating five solenoid valves in sequence to

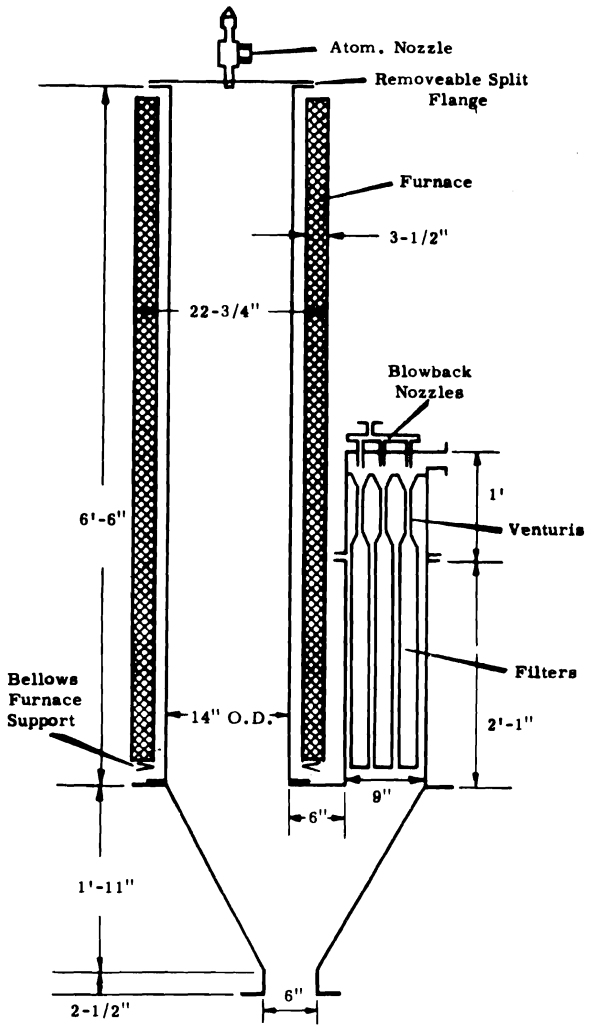

SHELL	
Heat Transfer Area	23 ft^2
Volume	
Drying Chamber	271 ℓ
Filter Chamber	
Clean Side	24 ℓ
Dust Side	52 ℓ
Tapered Bottom	86 ℓ
Total Volume	433 ℓ
Material	310 SST
Wall Thickness	0.375 inch
ATOM. NOZZLE	
Type	Pneumatic, External Mix all Welded
Air Orifice	303 SST 0.122 in. I.D.
Liquid Orifice	304L SST 0.100 in. I.D. 0.150 in. O.D.
FURNACE	
Type	Electrical Resistance, 3 Zones
Power	45 Kw
Heating Elements	Nichrome V
Max. Temp.	1000 °C
Norm. Temp.	600-800 °C
FILTERS	
Total Number	15
Material	316L SST
Mean Pore Size	65 Micron
Total Surface	15 sq.ft.
Normal Press. Drop	6 in. Water at 50 CFM Flow
FILTER BLOWBACK SYSTEM	
Gas	Air or Stream
Flow	9 SCFM at 60 psig
Pressure	20-100 psig
Nozzles	0.11 in. I.D.
Venturis	
End Diam.	2 in.
Cone Angles	30 degrees

Neg 0660204-6

FIGURE 3. Spray Calciner Assembly

direct the blow-back gas to the filter banks. A pulse length of 1 1/2 sec duration with a gas pressure of about 25-50 psig is normally used.

The calciner shell and filter chamber is constructed from 3/8 in. 310 SS. Calciner outer wall and internal temperatures are measured with chromel-alumel thermocouple wires inside 3/16 in. diameter sheaths of 310 SS.

The melter (see Figure 4) is connected to the bottom cone of the calciner with a removable clamp. The clamp contains an external cooling air ring to decrease the accumulation of sintered powder in the temperature transition zone between calciner and melter. The first melter was made of a platinum—0.5% rhodium alloy, but this vessel corroded when some stainless steel fell into the melt. This melter was replaced by a 100% platinum vessel.

The melter is suspended from a platinum flange into a single-zone furnace. Melt is usually maintained at about 5 liters, a level slightly above the conical bottom section of the vessel. Melt is continually discharged from an external weir by regulation of the pressure differential between the melter and the storage pot beneath the melter. A bottom-outlet freeze valve is used to batch discharge melt and to empty the melter at the end of a run. Both the weir and the freeze valve tips are surrounded by platinum-lined 1 kW furnaces to provide heat to open the valves.

Five 2 in. diameter nozzles are located in the top of the melter extending above the melter furnace. One nozzle is covered with a quartz window for viewing into the melter, another provides an entry for four platinum thermocouples, and a third can be used for inserting a melt level detector. The remaining two nozzles can be used for solids flux addition to the melter.

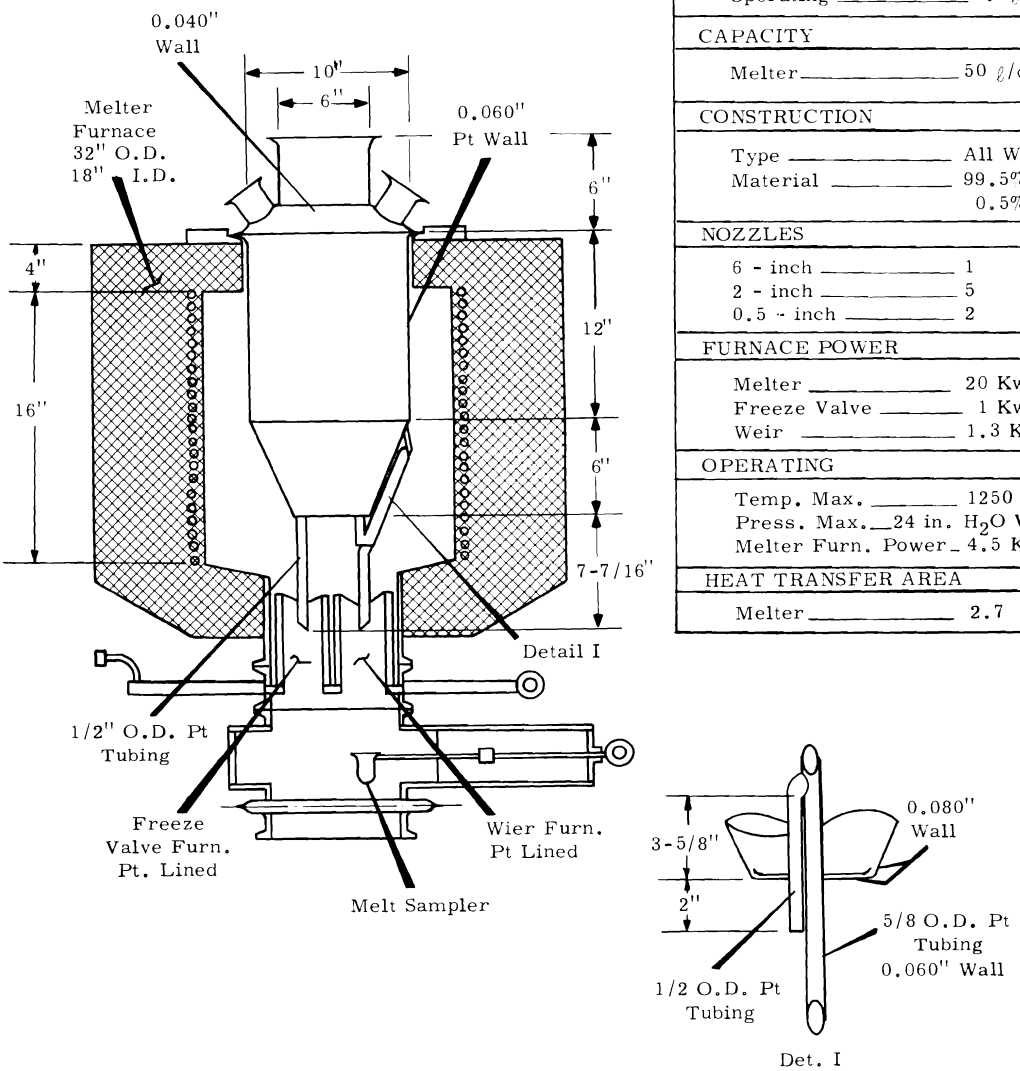

VOLUME	
Maximum	19.4 ℓ
Operating	4.5 ℓ
CAPACITY	
Melter	50 ℓ/day
CONSTRUCTION	
Type	All Welded
Material	99.5% Pt 0.5% Rh
NOZZLES	
6 - inch	1
2 - inch	5
0.5 - inch	2
FURNACE POWER	
Melter	20 Kw Max.
Freeze Valve	1 Kw Max.
Weir	1.3 Kw Max.
OPERATING	
Temp. Max.	1250 °C
Press. Max.	24 in. H_2O Vac
Melter Furn. Power	4.5 Kw
HEAT TRANSFER AREA	
Melter	2.7 ft^2

Neg 0660204-7

FIGURE 4. Continuous Melter Assembly, Spray Solidification

The melter furnace, a three-phase, single zone, 20 kW pot furnace with heating elements made of Kanthal A-1®, can be heated to 1300 °C, but is not heated above 1250 °C for routine service. The furnace is supported on four compression type pipe hangers mounted on a four-wheeled trolley. During remote maintenance, the furnace can be rolled toward the cell window on the supporting track. The furnace shell is penetrated by a narrow vertical slot sealed with a quartz window to visually monitor the melter wall temperature. The inside of the furnace is sealed at the top by the melter flange and at the bottom by the storage pot. The furnace and pot are vented through a control valve to the calciner off-gas system downstream from the calciner filters. Pressure relief around the control valve is provided by an adjustable bellows-sealed mechanical valve.

Melt samples are collected in small replaceable stainless steel cups inserted on a rod into the weir or freeze valve discharge stream. A quartz window on the sample chamber provides visibility for sampling and observing the melt flow to the pot.

The storage pot is connected to a stationary fill head (see Figure 5) attached to the bottom of the sample chamber, and extends down into a six-zone furnace. The pot is supported on a yoke on top of the furnace by two bails welded on opposite sides of the pot. When the pot is connected to the fill head, the moveable furnace containing the pot is positioned under the fill head. Two jacks are operated to lift the yoke and slip the pot around the fill head seal joint.

Two sizes of melt storage pots, 8 in. diameter (nominally 8 in. schedule 40 pipe) by 8 ft long (see Figure 6) and 12.0 in. OD by 8 ft long, are used. Both pots have a wall thickness of 0.312 in., and the volume of the 12. in. pot is exactly

® *Kanthal Corporation*

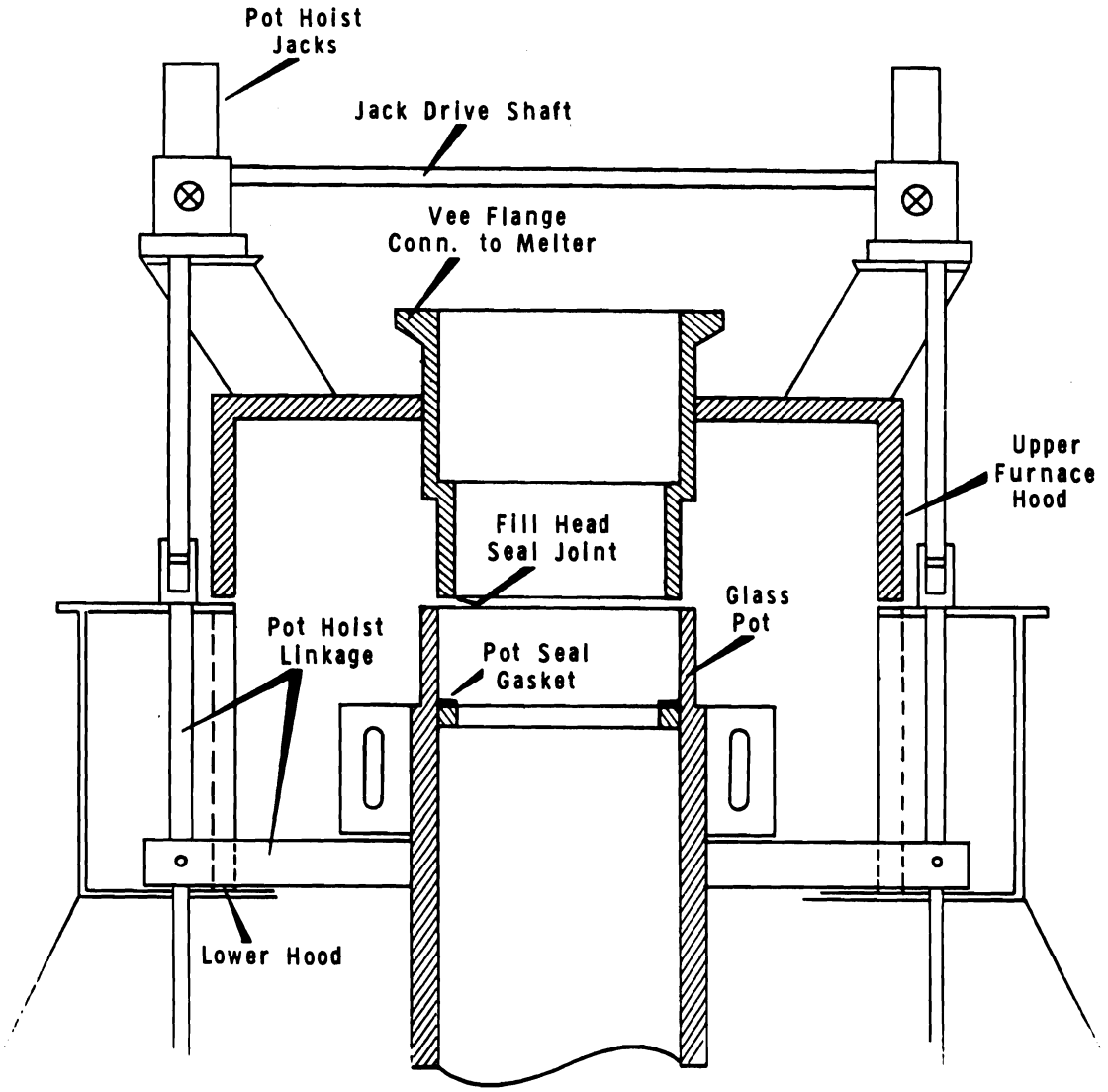

Neg 0660204-23

FIGURE 5. Melt Container and Fill Head Joint

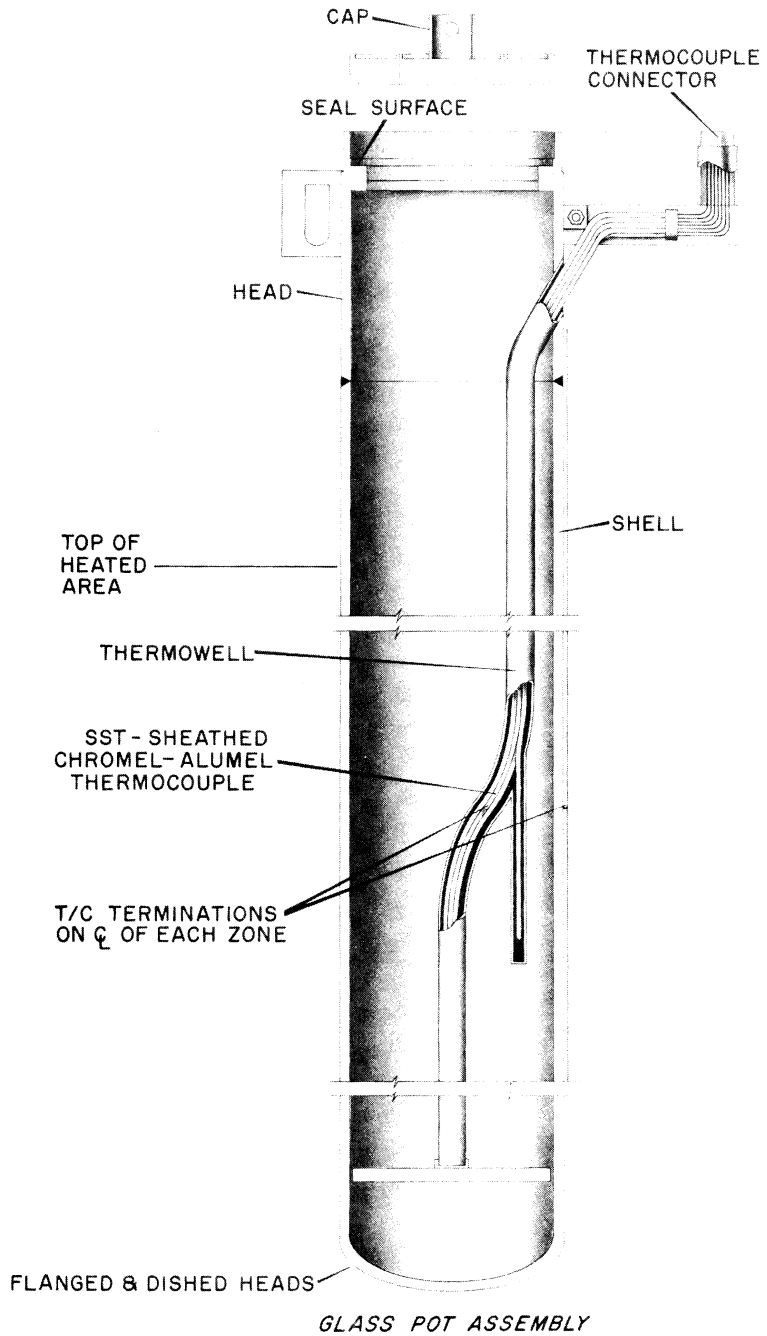

FIGURE 6. Spray Solidification Waste Storage Pot

twice that of the 8 in. pot. A 6 in. diameter pot may be used in a later WSEP test. Storage pots can be made from carbon steel, 304-L SS, or 310 SS. Carbon steel and 304-L pots were used in the spray solidification DVT's.

An internal thermocouple well in the melt pot provides for temperature measurements at the centerline of the bottom four heating zones. In the upper two zones, the thermowell bends in near the pot wall to avoid direct contact with melt flow from the melter. A fork in the thermowell bend contains a thermocouple used to measure product thermal conductivity. In addition, thermocouples are welded to the outside wall of the pot in each heating zone. All pot thermocouples are ungrounded chromel-alumel junctions covered with 1/8 in. diameter 310 SS sheaths.

Six-zone induction and electrical resistance furnaces are used in the waste solidification processes. Both furnaces were used at different times in the spray solidification DVT's for heating the product storage pots. The design of both furnaces is nearly identical. Figure 7 shows a vertical section through the induction furnace containing a pot calcination storage vessel. Four basic elements comprising the furnace assembly are (1) the rack structure, (2) the furnace proper with its heating and cooling systems, (3) the containment system, and (4) the pot fill head described previously and shown in Figure 5.

The complete assembly is mounted on a rack frame constructed from 6 in. pipe. Upper and lower plugs support the rack in the wall and are conduits for furnace electrical and cooling services. A track in the rack frame supports and guides the furnace trolley. The furnace is supported on a four-wheel trolley which is manually moved perpendicular to the wall to place the furnace in the pot "load" or "fill" position.

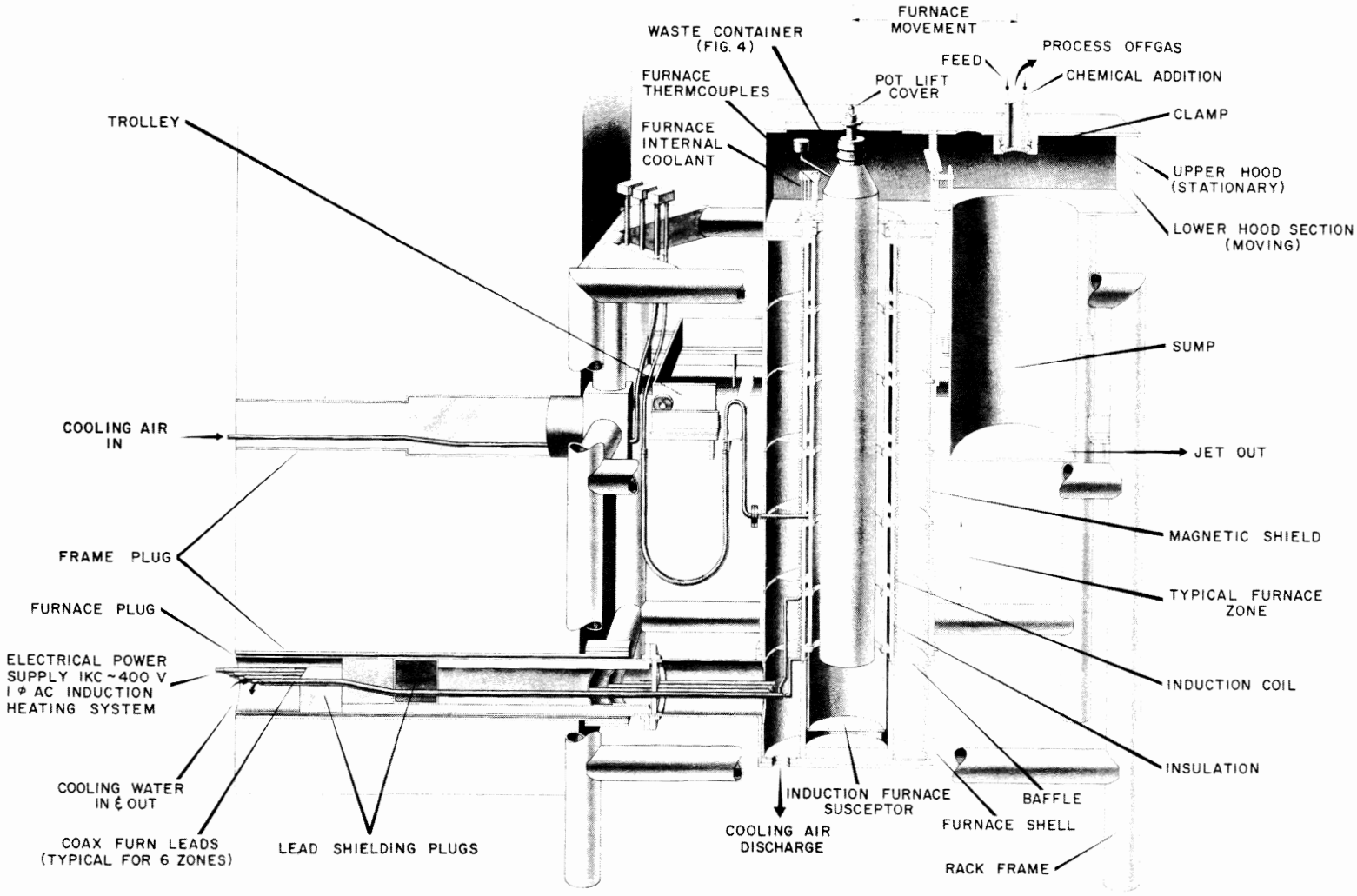

Neg 0652638-1

FIGURE 7. Induction Furnace Assembly

Each furnace consists of six identical sections physically separated by baffles. Each section has separate heating and cooling controls. The induction heating power is supplied by a six-station, 1 kc, single-phase ac 175 kW motor-generator set. Induction furnace temperature control thermocouples are contained in a "bird-cage" frame constructed from 1/4 in. Hastelloy X® tubes positioned inside the furnace susceptor. Cooling air is supplied by two blowers rated at 275 scfm each. Air is blown into the annulus between the insulation lines and furnace susceptor and is discharged to the atmosphere.

The Kanthal A-1 heating elements of the resistance furnace are connected in two separate three-phase circuits in each section. If any single-phase element fails, it is possible to reconnect the section to operate at one-half power, or reconnect the remaining two elements for single phase. Cooling air is supplied by the same blowers used for the induction furnace. Air blows on the furnace liner wall and flows upward and out through ten discharge ports in the top of the furnace.

The furnace containment system is designed to minimize radioactive contamination of the cell. The system is comprised of a hood, the furnace susceptor (or liner for the resistance furnace), the hood sump, and the pot lift cover. The hood is a two-section stainless steel box over the top of the pot and the rack sump. The upper section contains the pot fill head and is stationary while the bottom section slides with the furnace when the pot is removed from "load" to "fill" positions. The pot lift cover is a rectangular plate fitted with hangers to support the pot while the pot is moved into and out of the furnace. The lift cover seals the top of the hood when the pot is in the furnace.

® *Union Carbide Corporation*

FEED COMPOSITION DEVELOPMENT

WASTE COMPOSITIONS

High level wastes are produced by processing spent power reactor fuels. The WSEP will initially solidify power reactor wastes produced from a Purex type process. The projected power reactor wastes contain a higher fission product concentration but are otherwise chemically similar to current wastes from plutonium production reactors.

Table 1 shows the three waste compositions used in the spray solidification DVT's. Purex Waste-1 (PW-1) and Purex Waste-2 (PW-2) represent two waste compositions to be used in WSEP radioactive demonstrations. Design base 1WW is a high fission product content waste formulated for preliminary feed chemical characteristics testing before PW-1 and PW-2 compositions were derived. PW-2 is a sulfate-bearing, high sodium waste, while PW-1 contains no sulfate and low sodium but about twice the iron content of PW-2. Fission product distribution was based on a typical power reactor operating at 20,000 MWd/tonne, 15 MW/tonne. Future tests will be made with 45,000 MWd/tonne wastes.

FEED ADDITIVES

To produce melts from the wastes at practical operating temperatures, fluxing agents must be added to either the liquid waste feed stock or to the calcined feed in the melter. Table 2 lists the fluxes used in each DVT. If flux is added to the liquid waste, the resulting calcine melting point must be above the temperature of the calciner internal walls to prevent calcine adhesion to the walls. In this case, the "stick-point" of the calcine is actually more important than the melting point. The stick-point is defined as the temperature at which the calcine will adhere to a smooth metal surface (i.e., the calciner wall), and is usually about 200 °C below the calcine melting point.

TABLE 1. Composition of Simulated Waste Solutions (g-moles/liter; 378 liters/tonne U)

Component	PW-2	PW-1	1WW Design Base
Inert Chemicals			
Fe^{+3}	0.445	0.93	0.08
Cr^{+3}	0.024	0.012	0.016
Ni^{+2}	0.010	0.005	0.008
Al^{+3}	0.001	0.001	0.04
Na^{+}	0.972	0.180	0.422
SiO_3^{-2}	0.01	0.010	0
PO_4^{-3}	0.006	0.003	0
SO_4^{-2}	0.876	0.0064	0.096
H^{+}	2.99	5.0	3.9
NO_3^{-}	5.18	8.54	4.9
Fission Products			
ZrO^{+2}	0.065	0.065	0.065
Te (used SO_4^{-2})	0.0064 (included above)	0.0064 (included above)	0.0064
MoO_4^{-2}	0.065	0.065	0.065
Sr^{+2} + Ba^{+2} (used Ca^{+2})	0.035	0.035	0.035
Rb^{+} + Cs^{+} (used Na^{+})	0.042 (included above)	0.042 (included above)	0.042 (included above)
$(Y + RE)^{+3}$	0.12	0.12	0.12
Ag^{+} + Cd^{+2} (used Cu^{+2})	0.0016	0.0016	0.0016
Ru,Rh,Pd (used Mn^{+2})	0.057	0.057	0.057

TABLE 2. Additives to Waste Solutions (g-moles/liter; 378 liters/tonne U)

Run No.	CSC-1	CSC-2	CSCM-3	CSCM-4	CSCM-5	CSCM-6	CSCM-7	CSCM-8	CSCM-9	Run C
Feed type	PW-1	PW-2	1WW, Design Base	PW-1	PW-2[a]	PW-1	PW-2	PW-1	PW-2	PW-2[c]
Additives	None									
PO_4^{-3}		3.60	1.28	1.957	1.61	2.04[b] 1.96 1.81	1.61	1.74	1.61	1.61
Li^+		2.39					1.17	0.5	1.17	1.17
Na^+		2.69	0.57			0.9 0.83 0.9		0.5		
Ca^{+2}							0.6		0.6	0.6
Al^{+3}		0.746					0.25		0.25	0.25
$NaPO_3$							1.27		1.27	1.27
Fe^{+3}			0.12							
Ni^{+2}			0.012							
Cr^{+3}			0.024							
M^+/P[d]	---	2.3	2.25	1.86	1.8	2.1 2.2 2.4	2.1	2.6	2.0	2.0
Feed Conc., liters/tonne U	303	863	341	439	428	439	492	454	503	503
Feed Sp Gr (25 °C)	1.477	1.36	1.32	1.39	1.39	1.40	1.39	1.40	1.36	1.33

(a) Sulfate content reduced to 0.573 molar.
(b) Feed prepared in three batches.
(c) Contained 0.032 molar ruthenium.
(d) Ratio of total monovalent cation equivalents to phosphorous atom concentration in feed

Flux can be added to calcined waste in the melter to produce low-melting calcines which would normally limit the operating temperature, and hence the feeding capacity of the calciner, if the flux were added to the liquid feed solution. Low-melting calcines are desired to reduce volatilization of sulfate from the melt by operating the melter at low temperatures. In addition, storage pots need not be heated as high to prevent melt stalagmite formation if a low-melting product is filling the pot. If pot temperatures can be kept low enough to eliminate corrosion problems, cheap construction materials such as mild steel may be used for pot fabrication. Melting point reduction, however, is generally accompanied by an increased solubility of the product and lower overall waste volume reduction as more flux is added to lower the product melting point.

With the above-mentioned considerations in mind, a laboratory program was outlined to prepare workable feed compositions for spray solidification. This program was carried out during and in conjunction with the spray solidification DVT's. The following general guidelines were observed to direct the feed development program:

1. Calcined feed stick-point should be >700 °C, since the calciner wall temperatures must be kept at 650-700 °C minimum if a calciner feed rate of $\geq$15 liters/hr is to be maintained.
2. Product melting point should be <1000 °C in order to operate the melter furnace at $\leq$1200 °C and to be able to slump the melt in the storage pot without corroding the pot excessively.
3. At least 90% of the sulfate in the waste should be retained in the product.

4. Melt must be noncorrosive to platinum.
5. Melt should not contain separate phases which melt above 1000 °C or are excessively water soluble.

PW-1

Previous spray solidification work with a simulated high burnup waste very similar to PW-1 indicated that operable melt-producing feeds could be made by adding phosphoric acid to the liquid waste.[11] Based on this experience, phosphoric acid was added to PW-1 solutions giving waste metallic cation equivalent to phosphorous atom (M^+/P) ratios between 2.0 and 3.0. Each of the four solutions was dried and melted. Table 3 shows that the calcine melting point increases with M^+/P. The lower melting calcine is most desirable from the standpoint of melter operation and filling storage pots. However, feeds with M^+/P <2.2 plugged the calciner filters with excess phosphoric acid in the spray solidifier work cited above.

TABLE 3. Melting and Stick Points of PW-1 with Added Phosphoric Acid

M^+/P	Stick-Point, °C	Melting Point, °C
2.00	825	975
2.10	875	1025
2.50	900	1075
3.00	850	1125

In run CSCM-4, PW-1 with M^+/P of 1.86 was fed to the solidifier to determine the effects of high phosphate feed on solidifier operation. The filters did not plug, but the melter freeze valve would not open because the melting point of the product was too high (>950 °C). Run details are explained in a following section.

Because the melting point of PW-1 with phosphoric acid as the only additive was excessive for ideal operation of the spray solidifier later tests were made with sodium and

phosphate additives to lower the melting point of PW-1. In laboratory tests, 49 melts with M^+/P varying from 0.239 to 9.02 were prepared. Melts with M^+/P <1.5 were glassy, those with M^+/P between 1.5 and 2.3 were microcrystalline with glassy portions if quenched rapidly, and those with M^+/P >2.3 were microcrystalline. Figure 8 is a composition-melting point diagram plotted from the results of these tests. The shaded area in the upper right hand corner of the diagram represents the composition range which can be considered for spray solidification of PW-1 with sodium and phosphate added to the calciner feed, and using stainless steel storage pots. The area is bounded at the right and the top by the 950 °C melting point isotherm, on the bottom by this isotherm and the phosphorous concentration giving $M^+/P = 2.0$, and on the left by the 700 °C stick-point isotherm (not shown).[12] The left boundary also coincides with 40 mole % PW-1, which is a somewhat arbitrary goal for limiting the volume of solidified waste. In run CSCM-6, three PW-1 feeds with compositions close to this area were run. Feeds with M^+/P of 2.1 and 2.2 drained out of the melter weir, but feed with M^+/P of 2.4 was too viscous to drain at melter furnace temperatures up to 1200 °C. Stalagmites formed in the melt receiver held at 900 °C with all the melts, but slumped at 950 °C. Sodium and lithium mixtures were added to PW-1 phosphate feeds to study their effect on melting point. It was found that, on a mole basis, lithium had virtually no different effect on melting point than did sodium.[13]

A 1:1 mixture of sodium and lithium additive was successfully tested in run CSCM-8. Melt drained from the weir at a melter furnace temperature of 1100 °C and no stalagmites formed in the receiver held at 880 °C. On the basis of laboratory studies and the runs CSCM-6 and 8, the feed composition used in run CSCM-8 was chosen for the first WSEP PW-1 demonstrations.

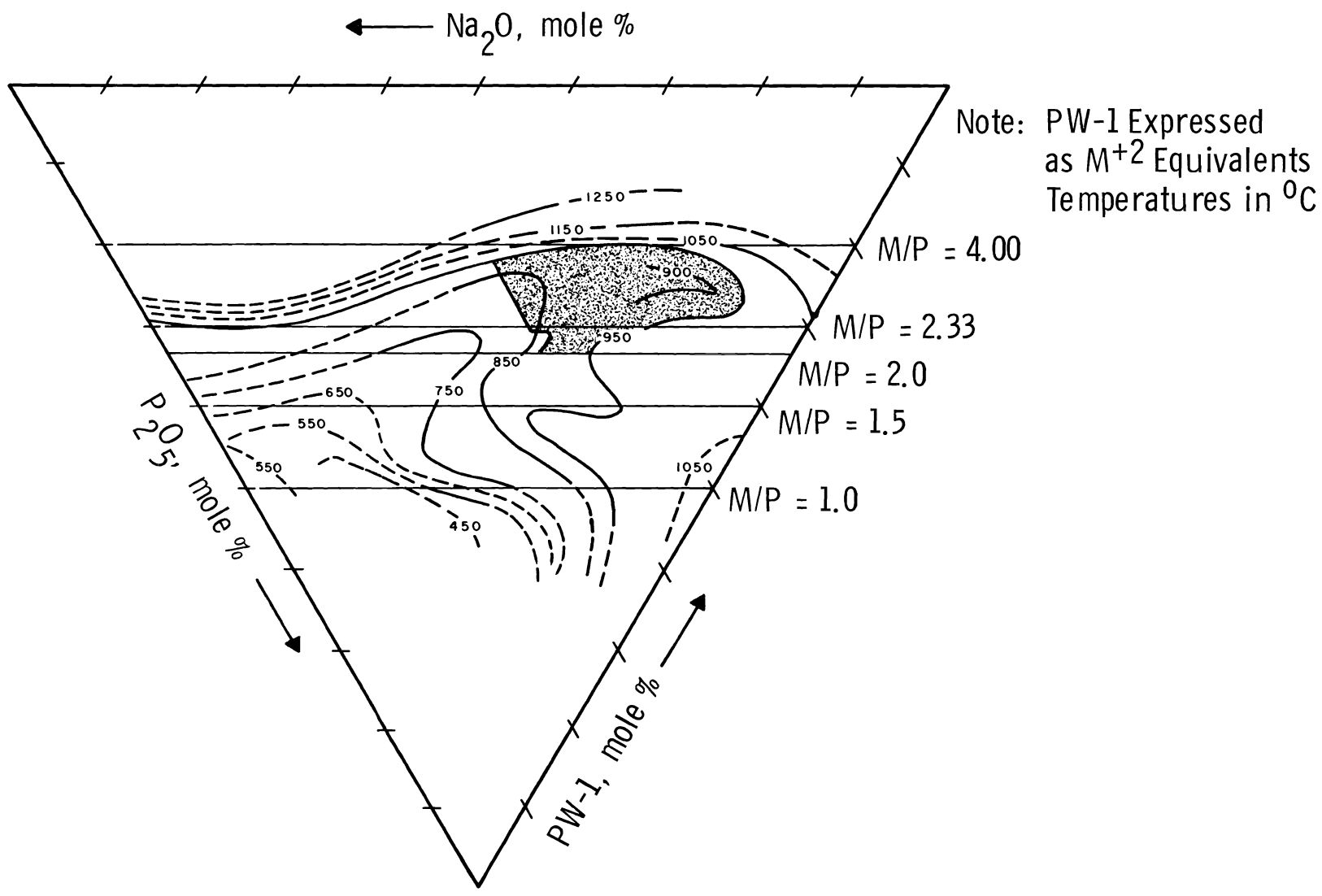

FIGURE 8. Na_2O:PW-1:P_2O_5 *Melting Point Isotherms*

To accommodate possible minor fluctuations in feed composition during feed make-up, the composition should have some flexibility. It was found that concentration variations of ±10% in PW-1, sodium and lithium, or phosphate would not increase the melting point above 950 °C, and low stick-points (<700 °C) would not be encountered until variations exceeded ±15%.[14]

Low melting (<750 °C) products, which could be collected in mild steel receivers using drip-wise collection, were produced by addition of high sodium and phosphate concentrations to PW-1. These melts contained 4.6-7.5 M phosphate and 5.4-7.2 M sodium in 378 liters/tonne of uranium as PW-1. Corrosion rates for mild steel (type AISI C1018) ranged between 25 to 45 mils/day at 720 °C. In addition to this marginally acceptable corrosion rate, these melts have a few disadvantages. The flux (sodium hexametaphosphate) would have to be added to the melter as a solid to prevent sticky deposits on the calcine walls. These melts are 5 to 10 times more water soluble than the melts usable with stainless steel pots, and they contain less than half as much waste oxide as do the melts collectable in stainless steel at slow drip rates. (20 versus 45 to 50 wt.%)

Further laboratory tests using boron and phosphate and lead silicate and phosphate as fluxing agents were made to find low melting products. Some of the borophosphate melts contained water soluble crystalline second phases, and all of the melts foamed severely in the first stages of melting. Because these characteristics made borophosphates appear unattractive as fluxes, further tests with these additives were abandoned.

In tests using lead silicate as the flux, tribasic lead silicate ($PbO \cdot 0.33\ SiO_2$) was chosen as the form for adding lead to PW-1. When compared on a molar basis, lead silicate

lowered the melting point more than sodium, but only at M^+/P below 1.75. At M^+/P >2, lead silicate was a less effective melting point depressant than sodium. Since no advantages in the use of lead silicate were demonstrated, investigations were terminated.[15]

PW-2

The largest difference between PW-2 and PW-1 compositions is that PW-2 contains sulfate. It is desired to retain the sulfate in the product to prevent the formation of a sulfate side-stream which must be disposed of separately and which is corrosive to off-gas treatment equipment. Spray solidification development tests had shown that sulfate could be retained in PW-2-phosphate melts by the addition of alkali metals such as sodium and lithium.[16] The alkali metals lower the melting point of the calcine which allows the melter furnace to be operated at low enough temperatures (800-850 °C) to prevent volatilization of sulfate from the melt.

A statistically designed laboratory study for workable PW-2 feed compositions was carried out with 46 melts.[17] Additives tested consisted of different concentrations of sodium, lithium, phosphate, calcium, and aluminum. It was found that the amounts of alkali metals necessary for sulfate retention also lowered the calcine stick-point below the minimum desired calciner wall temperature of 700 °C. To avoid this problem, part of the alkali metal is added directly to the melter through a solids feeder. The composition chosen was used as feed in DVT runs 7,9 and C. Additives to the liquid waste included 1.17 M lithium, 0.6 M calcium, 0.25 M aluminum, and 1.61 M phosphoric acid based on 378 liters/tonne as PW-2.

Lithium and sodium were added to lower the melting point in order to retain the sulfate in the melt. Calcium was also added to retain the sulfate in the melt, while the addition

of aluminum was to decrease the product solubility and increase the calcine stick-point. Sodium metaphosphate ($NaPO_3$) was added as a solid frit to the melter at an equivalent feed concentration of 1.27 M. Calcine melting point was 900 °C and stick-point was 750 °C. When the sodium metaphosphate was added, the mixture melted at 700 °C. More than 96% of the feed sulfate was retained in the melt in all three runs.

Laboratory experiments with melt of the composition tested in runs 7,9, and C showed the effects of melt temperature and time on sulfate volatilization. Figure 9 summarizes the results of these experiments. In the DVT's, melt residence time in the melter was between 3 and 4 hr at an average temperature of 750 to 800 °C. Between 3 and 4% of the SO_3 should evolve from the melt under these conditions, according to Figure 9. This amount agrees closely with the data obtained from the DVT's.

Laboratory tests were made to determine the effect of additive concentration variations on calcine stick-point and melting point, melt sulfate retention, and melt homogeneity. Combinations of additives varying ±15% from feed specifications were tested. In this range, variations in stick-point and melting point were less than 50 °C from the original feed values. Melts were lumpy when first formed, but homogeneous after 30 minutes at 950 °C. After adding $NaPO_3$, as would be done in melter operation, the melts became fluid and homogeneous at 850 °C. Sulfate evolution was doubled by additive variations of 15%. Variations in additive within 5% did not affect sulfate evolution.[18]

PRODUCT SOLUBILITY

Product (i.e., the solidified waste) leach tests are planned as part of the evaluation of the WSEP runs. In order to predict the solubility of future radioactive products, leach

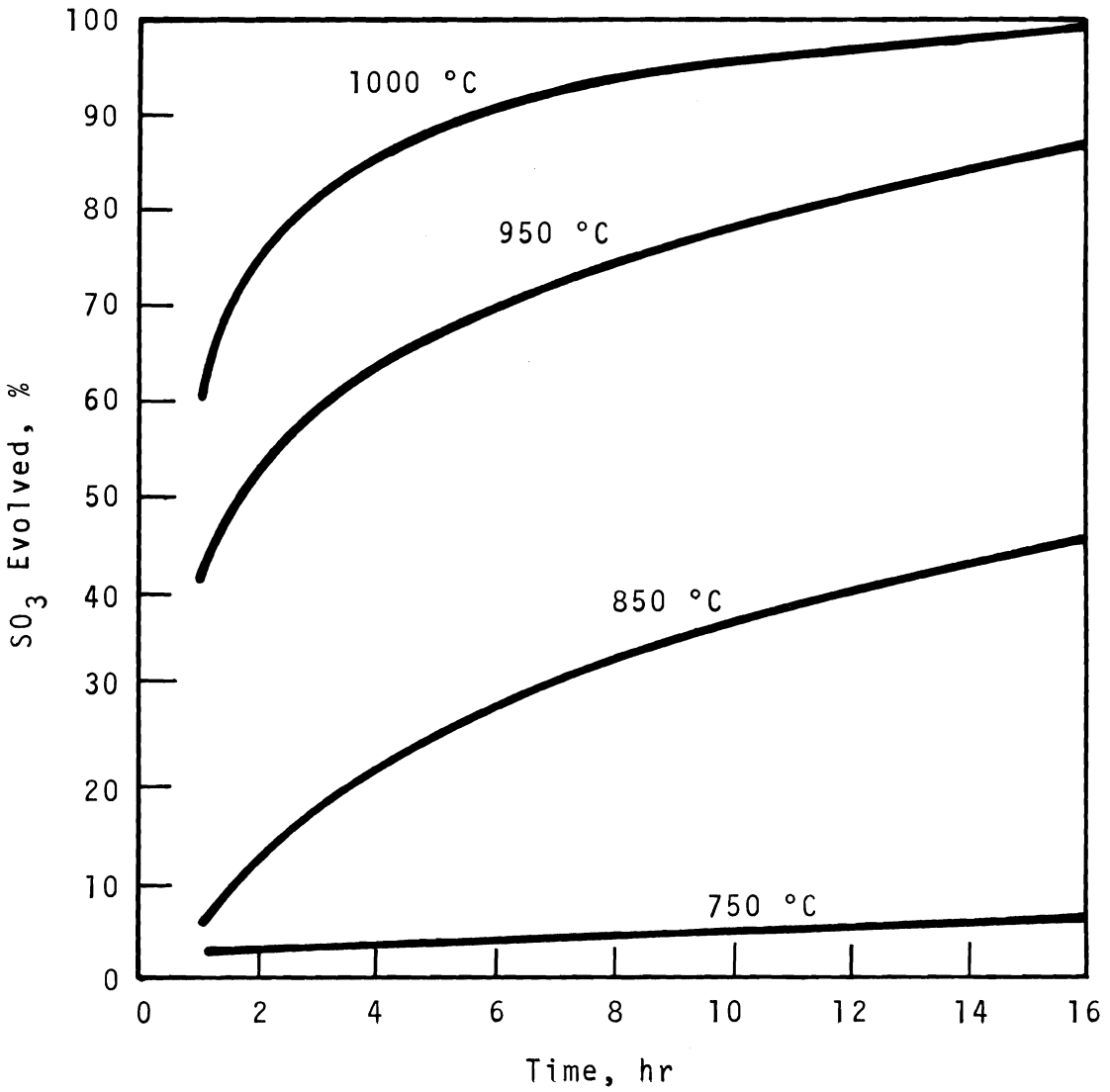

FIGURE 9. *Effect of Time and Melt Temperature on Sulfate Retention*

rates were obtained on both PW-1 and PW-2 nonradioactive solid samples. The PW-1 composition was the same as used in DVT run CSCM-8, and the PW-2 composition was the same as tested in runs CSCM-7, 9, and C. The leach apparatus and procedure used was similar to that described by Paige.[19]

In these tests, 500 ml of distilled water was continuously circulated over a button-shaped, annealed melt sample at a rate of 250 ml/min by means of an air-lift circulator. The leach water was maintained at 24 °C and was sampled and changed once a week. Water samples were analyzed for sodium, and leach rates were calculated on this basis.

Leach rates obtained for the two samples are plotted in Figure 10. The results indicate that a leaching period of greater than 8 weeks is needed to obtain a constant leach rate. The sulfate-bearing PW-2 melt was about 10 times as soluble as PW-1.[20]

No specific product solubility criteria have been set up for WSEP solid product, so the leach rates obtained in the tests described above will probably serve as a standard of comparison for future spray solidification product solubilities.

MELT CORROSION TESTS

Laboratory corrosion tests with PW-1 and PW-2 melts were carried out as part of the feed composition development.[21] The test objectives were to determine the best materials for storage pot construction and to define the temperature limits to which the pots may be heated. A secondary objective was to find, if possible, a material cheaper than platinum which could be used for continuous melter construction.

The data summarized in Table 4 show that both 310 and 304-L SS are acceptable materials for PW-1 storage. Carbon steel, with PW-1, should not be ruled out, however, if batch filling of pots is considered. In this case, the pot furnace could be

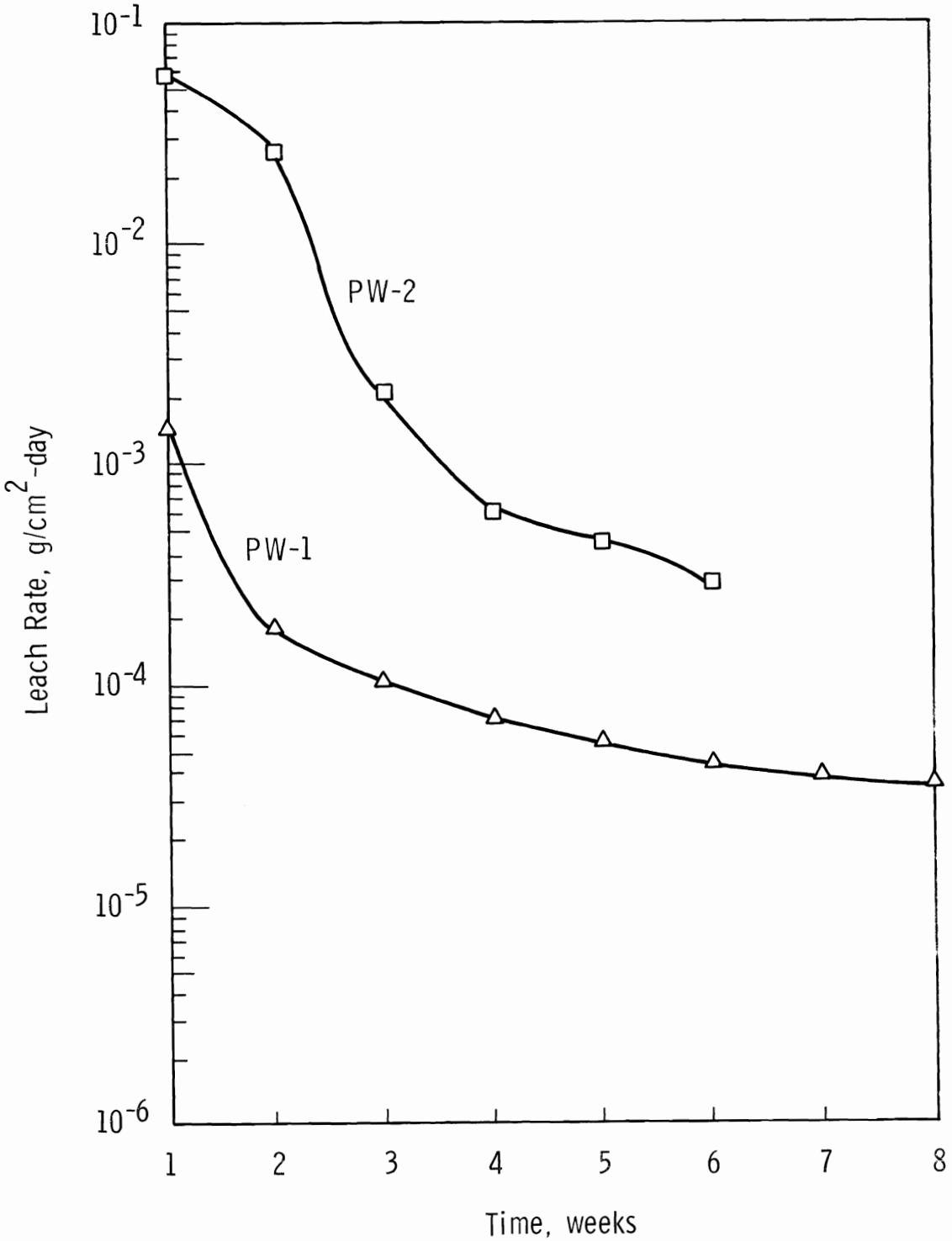

FIGURE 10. Leach Rates of Spray Solidification Products

TABLE 4. PW-1 and PW-2 Melt Corrosion Tests

Melt Additives*	M^+/P	Test Material	Exposure Temp., °C	Corrosion Rate, mils/mo
PW-1 Melts				
1.74M PO_4^{-3}, 0.5M Li, 0.5M Na	2.6	310 SS	900	2.3-5.8
" " "	2.6	310 SS	950	3-15
" " "	2.6	310 SS	1000	210
" " "	2.6	304-L SS	900	15
" " "	2.6	304-L SS	950	14-70
2.04M PO_4^{-3}, 0.9M Na	2.3	304-L SS	1000	>3000
2.04M PO_4^{-3}, 0.9M Na	2.3	AISI 1020 (carbon steel)	1000	>1900
1.26M PO_4^{-3}	2.7	Hastelloy G®	1100	severe
"	2.7	Nickel	1100	>3000
"	2.7	Corronel 230®	1100	>3000
PW-2 Melts				
1.61M PO_4^{-3}, 1.17M Li, 1.27M $NaPO_3$, 0.25M Al, 0.6M Ca	2.0	304-L SS	780	3-22
" " " " "	2.0	304-L SS	800	39-134
" " " " "	2.0	304-L SS	900	75
" " " " "	2.0	304-L SS	1000	>3000
" " " " "	2.0	RA 333®	900	68
" " " " "	2.0	RA 333	1000	severe pitting
" " " " "	2.0	50% Cr-50% Ni	900	16
" " " " "	2.0	50% Cr-50% Ni	1000	67
" " " " "	2.0	Corronel 230	900	5
" " " " "	2.0	Corronel 230	1000	11
" " " " "	2.0	Corronel 230	1100	>3000
" " " " "	2.0	AISI 1020 (carbon steel)	700	30
" " " " "	2.0	AISI 1020	900	>3000
" " " " "	2.0	AISI 1020	1000	>3000

® *Hastelloy G - Union Carbide Corporation*
® *Corronel 230 - Henry Wiggins and Co.*
® *RA 333 - Rolled Alloys, Inc.*
* *Concentrations based on 378 liters/tonne U*

operated at much lower temperatures (possibly unheated) than that (900 °C for PW-1) required for pots filled by drip overflow from the melter. For PW-2 melt, all of the materials tested would be acceptable for storage pot constructions, but carbon steel is the most attractive because of its lower cost. Pot furnace temperatures required for PW-2 melt drip discharge filling are between 600 °C and 700 °C.

None of the materials tested could be made into a continuous melter for the PW-1 melts developed so far. The melter would have to be operated at $\geq$1100 °C to provide a reasonable melting capacity. Corronel 230 and 50% Cr–50% Ni alloys could be used with PW-2 since the melter would be operated at a maximum temperature of 1000 °C and most of the time at 900 °C. None of the materials was adequate for operation with both melts. Further tests with other materials are in progress.

DISCUSSION OF DVT'S

The WSEP spray solidifier was tested in 10 nonradioactive DVT runs in the period between August 1965 and July 1966. Run data are summarized in Table 5. Three different feed types with a variety of phosphate melt forming additives were used. Simulated fission product distribution for 20,000 MWd/tonne fuel irradiated at 15 MW/tonne was included in feed for all but one of the runs. Feed was prepared by dissolving metal nitrates in dilute (<3M) nitric acid. Precipitate-forming chemicals such as phosphoric and sulfuric acid were added last after the other chemicals had dissolved.

It runs with PW-1, lithium and/or sodium along with phosphoric acid were added to lower the calcine melting point sufficiently (<950 °C) so melt could be drained from the melter and fill the storage pots uniformly (see preceding section). PW-1 with equimolar sodium and lithium additives and phosphoric acid to give an M^+/P of 2.6 produced a calcine with a melting point of 880 °C. After this feed was successfully tested in run CSCM-8, this composition was chosen for the WSEP PW-1 demonstration, with the spray solidifier.

A PW-2 feed was successfully tested in DVT runs 7, 9, and C. Alkali metals were added to the liquid waste and solid sodium metaphosphate frit was added to the melter to lower the calcine melting point to 700 °C in order to hold the feed sulfate in the melt. Less than 4% of the sulfate was volatilized from the feed in these runs. This feed composition will be used for WSEP PW-2 demonstrations. In run CSCM-5, only phosphoric acid was added to PW-2 in order to observe the consequences of evolving all the sulfate from the melter. Sufficient sulfate condensed as sulfuric acid on the calciner filters and around the melter inlet to form thick, damp powder deposits at these points. Since these areas could not be heated above the condensation temperature of sulfuric acid (400 °C), it was obvious that most

TABLE 5. Spray Solidifier Design Verification Tests - Summary

Run No.	Feed Type	Feed Additives	M^+/P	Run Duration, Hrs.	Avg. Feed Rate Lit/Hr	Atom. Gas	Atom. Gas Flow kg/hr	Calciner Furnace Temp., °C	Calciner Vacuum, in. Water	Calciner Internal Deposits	Filter Blow-back Gas	Blow-back Gas Press., psig	Blow-back Cycle Time Min.	Blow-back Pulse Length sec.	Calciner Filter ΔP, Start, in. Water	Filter ΔP, End in. Water	Melter Furn. Temp., °C	Weir Furnace Temp., °C	Pot Material	Pot Diameter, Inches	Pot Furnace Temp., °C	Melt Stalagmites in Pot	System Air in-Leakage, SCFM	Filter DF (Sodium)
CSC-1	PW-1	None	----	12.25	21.6	Steam	14	710	18	Gross in Cone	Steam	40	2	1.8	1	2.7	No Melter	---	Carbon Steel	8	500	------	1	4000
CSC-2	PW-2	Na,Li, Al,PO_4	2.3	13.25	10.4	Steam	14	525 Top 575 Bottom	18	Gross on Walls and Cone	Steam	22	2	1.5	1	3.0	No Melter	---	Carbon Steel	8	500	------	3.2	203
CSCM-3	1WW	PO_4	2.25	33	16.1	Steam	14	700	13	Gross in Bottom of Barrel and Cone	Steam	22	2	1.5	3	5	1175	1020	Carbon Steel	8	700 Top 400 Bottom	4 ft. long	11	1600
CSCM-4	PW-1	PO_4	1.86	65.5	16	Air	8-16	700	6-8	1/4"-1/2" Layer on Walls - 2" Crust at Melter Inlet	Steam	18	2	1.5	4	5	1200	1050	304-L St. S	8	800-900	On Wall in Top Zone	5	56
CSCM-5	PW-2	PO_4	1.8	21.5	18.6	Air	8-16	730	10-12	Large Lumps in Cone Filters Coated	Steam Air	28-45	2	1.5	4.5	25	1100-1200	1050	304-L St. S	8	900-950	On Wall in Top Zone	6	4700
CSCM-6	PW-1	Na PO_4	2.2, 2.4 2.1	66.25	20.9	Air	8-16	700	10	Lumps and dry Powder in Cone	Steam	20-28	2	1.5	4.5	9	1150 1200	1050	304-L St. S	12	900-950	3-1/2 ft. Long	3	6000
CSCM-7	PW-2	Ca,Li Al,PO_4 Na,PO_3	2.1	41	13.2	Air	8-16	670	7-11	Gross in Cone 1st Half of Run	Steam	28	2	1.5	3.5	5	900-950	820-800	304-L St. S	8	700-750	None	7-11	12,000
CSCM-8	PW-1	Na,Li PO_4	2.6	20.8	19.3	Steam	14	700	9	1" Thick in Cone	Steam	20	2	1.5	4	9	1100-1150	880	304-L St. S	8	830-880	None	6	3000
CSCM-9	PW-2	Ca,Li Al,PO_4, Na,PO_3	2.0	8.1	11.7	Steam	14	670	4.5-9	1" Thick in Cone	Steam	20	2	1.5	4.5	7.8 Half Way thru Run	900-950	750-850	Carbon Steel	8	650-700	None	8-9.5	570
Run C	PW-2	Ca,Li Al,PO_4, Na,PO_3	2.0	14.9	18.1	Steam	14	675	4-12	1/8-1/2" Scale on Barrel. 1" in Cone	Steam	20-50	2	1.5	8	17	900	800	304-L St. S	8	650-700	None	3-5	500

of the sulfate had to be retained in the product for successful spray solidifier operation.

Ruthenium was added to PW-2 feed in the final run. About 2/3 of the ruthenium was volatilized to the off-gas condensate. Further development is underway to prevent ruthenium contamination in the process effluent streams.

In run CSCM-3, a "design base" 1WW feed with added phosphoric acid was used for the first DVT run with the melter. This waste is composed largely of fission products such as rare earths, zirconium, and molybdenum. A dense precipitate accumulated in the bottom of the melter and could not be drained through the melter valves. The material was identified as rare earth phosphates. Further testing with this feed was discontinued, since wastes of this type were not to be run in the WSEP until late in the program.

The calciner walls were heated to 670-730 °C in all of the runs except the second. At these temperatures, desired feed rates of 15 to 20 liters/hr could easily be maintained. The calciner drying capacity was determined in this temperature range with water, PW-1, and PW-2 feeds. Drying capacities were 42, 28, and 21 liters/hr, respectively. An arbitrary definition of drying capacity is the liquid feed rate which gives a minimum calciner internal temperature of 200 °C. When the calciner wall temperatures were reduced to 525-575 °C for run CSC-2, the drying capacity decreased to 10 liters/hr.

The melter capacity at furnace temperatures of 1150-1200 °C exceeded 36 liters of liquid feed to the calciner per hour with PW-1 feed. With furnace temperatures from 900-950 °C, the melter capacity was 17 liters/hr for PW-2. The overall capacities for the spray solidifier were equivalent to processing rates of 1.5 and 0.83 tonne of uranium/day for PW-1 and PW-2, respectively.

The calciner spray nozzle performance was never completely satisfactory in any of the runs. Coarse spray droplets generally existed in the center core of the nozzle spray pattern. These droplets formed damp powder deposits on the calciner walls and in the calciner cone below the nozzle. Occasionally, these deposits were heavy enough to plug the calciner outlet into the melter, usually making it necessary to discontinue the run until the deposits could be manually removed.

The nozzle used for the DVT's was a commercially produced two-fluid, external-mix type in which separate streams of pressurized atomizing gas and liquid feed were mixed to form a fine spray immediately after emission from the nozzle. This nozzle was chosen as the best of a group of commercial external-mix nozzles tested in the developmental spray calciner and/or given qualitative visual tests for atomization.

Atomizing air produced a finer quality (smaller, more uniform droplets) spray than atomizing steam, although neither gas was adequate. Steam atomization was improved by pre-heating the steam to 350 °C and passing it through a mist eliminator before reaching the spray nozzle.

Whenever feed flow to the nozzle was stopped, it was necessary to immediately flush the nozzle with water to prevent nozzle pluggage with calcined feed. Plugs could usually be cleared with a remotely operated needle mounted on top of the nozzle. If the plug was not cleared immediately, however, further calcination usually made it impossible to clean without removing the nozzle from the top of the calciner for manual rodding.

Tests were made after the DVT's with internal-mix nozzles (gas and liquid streams mix just before leaving the nozzle to form the spray). Performance of this nozzle type was good with air atomization, and this type was later chosen for the WSEP demonstrations. A safety system was also incorporated into the

feed and atomizing gas lines to prevent backup of radioactive feed into the atomizing gas supply line should the nozzle become plugged.

A vertical free-piston air vibrator mounted on top of the calciner was actuated intermittently to knock adherent powder from the internal walls into the melter. As long as the powder was dry, the vibrator effectively cleaned the calciner barrel walls. Usually an equilibrium powder thickness of about an inch formed in the calciner cone below the filters. These deposits, though harmless, could not be removed with the vibrator. The angle of repose of the dry powder was about 3° greater than the angle of the cone.

Wet powder deposits from poorly atomized feed built up to greater than an inch thick on the inner walls of the calciner. Occasionally, the deposits nearly bridged across the bottom of the barrel or plugged off the inlet to the melter. In these instances, the vibrator was ineffective in removing the powder. Neither manually operated rods nor a motor-driven chain inserted into the calciner cone provided a reliable means of preventing deposition under these conditions. Generally the deposits were removed manually by scraping with rods inserted through the spray nozzle port and the diagonal nozzles in the sides of the calciner cone. Thermal shock removal by spraying water on the hot internal walls of the calciner did not clean the walls sufficiently. Following the first WSEP demonstration run, the calciner walls were successfully cleaned by extended washing with dilute nitric acid sprayed through a moveable nozzle inserted through the top of the calciner.

Powder sometimes collected in the calciner seal pot and connecting pipe when adequate vacuum was not maintained in the calciner during filter blowback. These deposits were eliminated by reducing the blowback pressure, increasing the water seal leg from 25 to 29 in., injecting a stream of pre-heated (200 °C) air

to the connecting pipe, adding a baffle to the pipe inlet, and adding a small disengaging chamber between the seal pot and its effluent pipe.

Powder de-entrainment from the calciner off-gas was effectively accomplished with the sintered stainless steel filters. Particulate de-entrainment factors ranging from 56 to 12,000 were achieved in the runs. The average value was about 3000. Typical steady state filter pressure drops varied from 5 to 10 in. H_2O. When the filters were wetted with sulfuric acid or by poorly atomized feed droplets, however, the pressure drop increased to as high as 25 in. H_2O. Filter pulse blowback pressures were limited to 25-30 psig to prevent pressurization of the calciner. Either air or steam heated above 250 °C served as an effective blowback gas. Attempts to remotely clean the filters in place were unsuccessful during the DVT's. In the WSEP demonstrations, however, the filters were successfully cleaned by extended pulse blowback with unheated steam and nitric acid. Extended pulse blowback with 100 psig air, and water spraying with an internally-mounted sprinkler pipe did not remove appreciable amounts of scale. The filters were removed from the calciner and cleaned by soaking in cold nitric acid following runs 5 and C.

The melter performance was generally satisfactory. Melt foaming was not encountered with any of the feeds tested. Sintered powder formations around the top of the melter inlet were eliminated by adding a cooling air ring on the clamp joining the melter and the calciner. The melter external weir provided a good vacuum seal between melter and storage pot, although melt would sometimes surge through the weir during filter blowback pressurizations. A vertical rib welded inside the weir tip straightened the flow of melt, thereby preventing spattering against the wall of the receiver pot. Melt discharged smoothly through the freeze valve. Once the melt stream started, the flow could not be stopped by blowing cooling air on the freeze valve liner or by regulating differential pressure between the melter and receiver. The freeze valve and weir resistance heaters worked occasionally, but were unable

to consistently provide the high temperatures (1000-1100 °C) necessary for melt discharge. The heater elements failed often due to overheating. If the pressure differential between melter and receiver was not nearly equalized when the melter liquid level was low, air back-sparged through the weir causing melt spattering which could plug the melter inlet nozzles with solidified melt.

Liquid level in the melter was best determined by visual observation through the window in the top of the vessel and by internal melter temperature readings. The view through the window usually was partially or totally obscured after several hours of operation when sintered calcine stuck to the glass. The window could be changed easily be remote manipulation. A microwave pulse reflectometer probe was tested for melt level detection in several runs and at first worked satisfactorily. Eventually the ceramic insulators in the probe were dissolved by the melt however, and erratic readings were obtained afterwards. With design changes and further development, this instrument could become a reliable measuring device.

When the PW-2 feed was run in the solidifier, solid sodium metaphosphate flux was added to the melter. A temporary installation with a modified vibrating trough feeder which discharged the solids in batches could not be sealed to prevent excessive air in-leakage into the solidifier off-gas system. In addition, the solids rate could not be controlled accurately and the outlet pipe to the melter plugged with solids. During the WSEP demonstration, tests made with a double-valve air lock feeder for periodic solids addition into the cone of the calciner, proved successful.

The inside of the melter was badly corroded following run CSCM-8. Several cracks and pitted areas were located in the bottom half of the vessel. Analysis indicated they were caused by phosphorous alloying with the platinum under locally reducing

conditions. These conditions were present when a stainless steel chain fell into the melter and was dissolved in run CSCM-3. The alloying action corroded and embrittled the platinum. All of the melter except the top lid was replaced with a new vessel made of unalloyed platinum, although the composition of the old melter (platinum –0.5% rhodium) did not contribute to its failure.

Melt samples were taken remotely by removing the sample chamber window and inserting a sample cup under the discharging melt stream. Samples could be taken with the built-in sampling device, but it was difficult to insert with a manipulator. An adjustable mirror for viewing into the collection pot was mounted in the sample chamber. The mirror was soon clouded, however, by melt which collected on the mirror surface. Air-purging failed to keep the mirror clean.

The results of the DVT's showed that PW-1 and PW-2 melts could be collected in 304-L SS and carbon steel pots, respectively, without fear of excessive pot corrosion. Maximum allowable pot wall temperatures for short time periods were 950 °C for 304-L SS and 700-725 °C for carbon steel. At these temperatures, the pots could be filled evenly by intermittent drip discharge from the melter weir. The "slump points" of the best PW-1 and PW-2 melts were ∿50-100 °C below these temperatures. Melt stalagmites formed on the pot walls in early runs with high melting point (>950 °C) feeds. Using lower melting point feeds in later runs and directing the weir flow to the center of the storage pot corrected this problem. The pot solids level was determined approximately by observing the individual zone centerline temperatures.

Both induction and resistance furnaces were tested on the calciner and melt receiver. Neither furnace offered any particular advantage over the other, and both performed satisfactorily. Resistance furnaces were designed for the spray solidifier in the WSEP. The induction furnace is designed and used for the pot calciner and the phosphate glass solidifier in WSEP.

The melter resistance furnace performed well at temperatures up to 1200 °C. Furnace heat loss at 1200 °C was 8 kW and the normal melting heat load was about 2 kW. All of the furnace controls were satisfactory.

Air in-leakage into the solidifier system varied from 1 to 11 scfm during the runs. Best operating conditions were obtained with <5 scfm of air leakage. Most of the air entered through leaks around the melter sample chamber and through the melter solids feeder, when it was used. When in-leakage exceeded about 8 scfm, the vent system could not maintain a negative pressure on the calciner during filter blowback.

Spray solidifier condensate was usually collected in the evaporator (TK-113). In three runs, the evaporator and nitric acid fractionator (TK-115) were boiled to concentrate the acid condensate. Evaporator acid bottoms were maintained between 5-8M, while the overheads were concentrated to 8M nitric acid in the fractionator. In a separate test with 0.1M nitric acid, the boilup capacities of the evaporator and fractionator were determined as 430 and 270 liters/hr, respectively.

APPENDIX

DETAILED RUN SUMMARIES

APPENDIX - DETAILED RUN SUMMARIES

Ten spray solidification runs were made with the WSEP spray solidifier equipment. For the first seven runs, the equipment was located in the cold semiworks canyon of the 321 Building at the Pacific Northwest Laboratory. Master-slave manipulators for servicing the equipment racks were inserted through the walls of a central control room into the canyon to simulate the equipment arrangement to be installed in the hot cell. Contact maintenance was possible by personnel entrance to the canyon.

The equipment was later moved to its permanent location in B-Cell in 324 Building for the final three nonradioactive runs.

Following are detailed summaries of each spray solidifier DVT run.

RUN CSC-1

CSC-1 (designating "cold" spray calciner, run number one) was carried out in a 12 hr run to check out the equipment operability and test operating procedures. The melter had not arrived from the manufacturer, so an adaptor made from 6 in. stainless steel pipe was used to connect the bottom calciner outlet to the receiver pot. Seventy liters (45 kg) of calcined feed were collected in the 8 in. product pot.

The calciner three-zone resistance furnace was not yet available, so a three-zone induction heater was fabricated locally for temporary use. Figure 11 pictures the spray calciner equipment as it appeared for both runs CSC-1 and 2. To the right of the induction-heated calciner barrel are the calciner seal pot, the insulated off-gas line, and the plastic-sheathed service manipulators.

The spray solidifier was connected to the auxiliary tanks as shown schematically in Figure 12. Neither the evaporator (TK-113) nor the fractionator (TK-115) was heated during the run. Condensate was collected in TK-117, which also served as

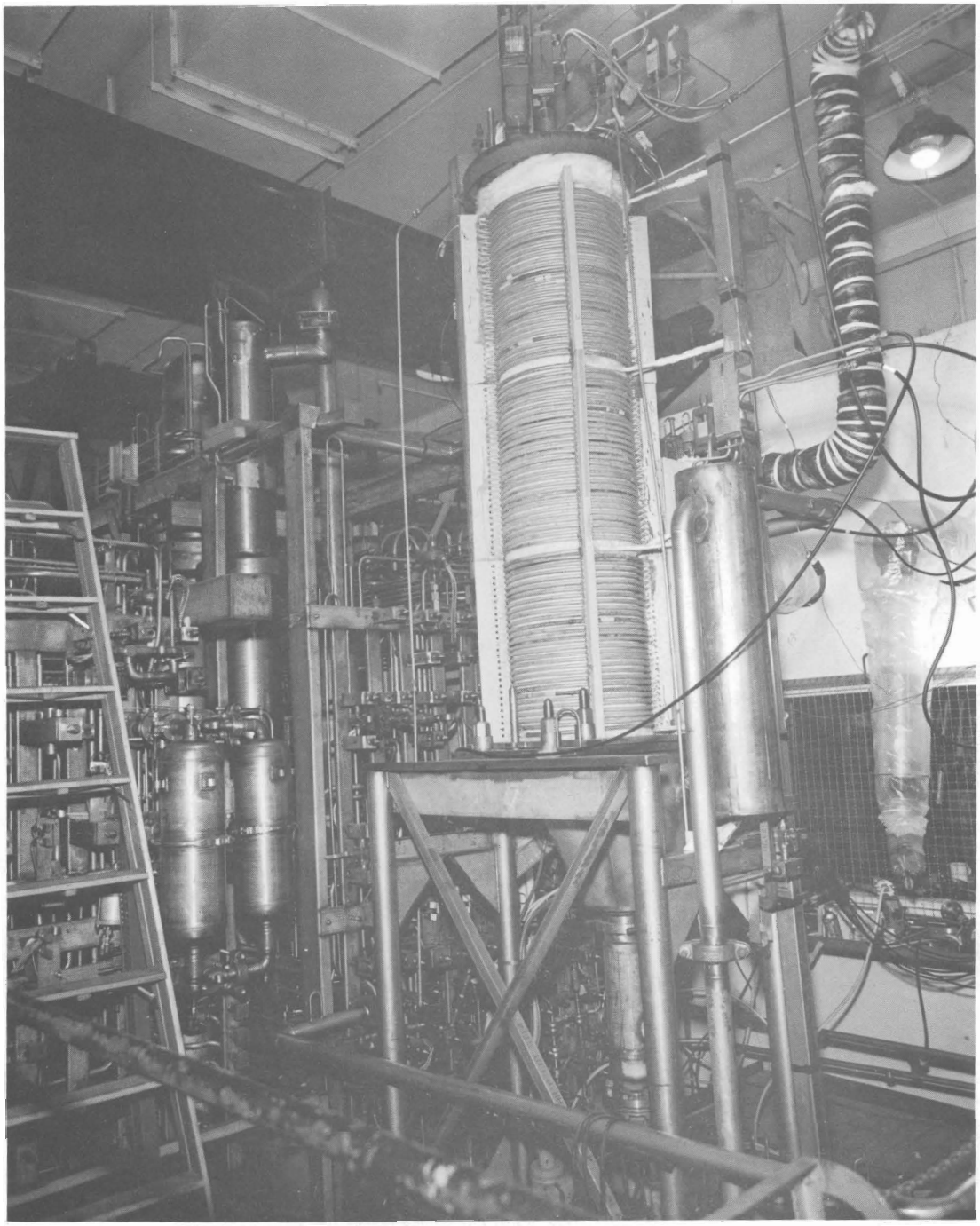

Neg 0652296-5
FIGURE 11. Spray Solidification Equipment Arrangement for Runs CSC-1 and CSC-2.

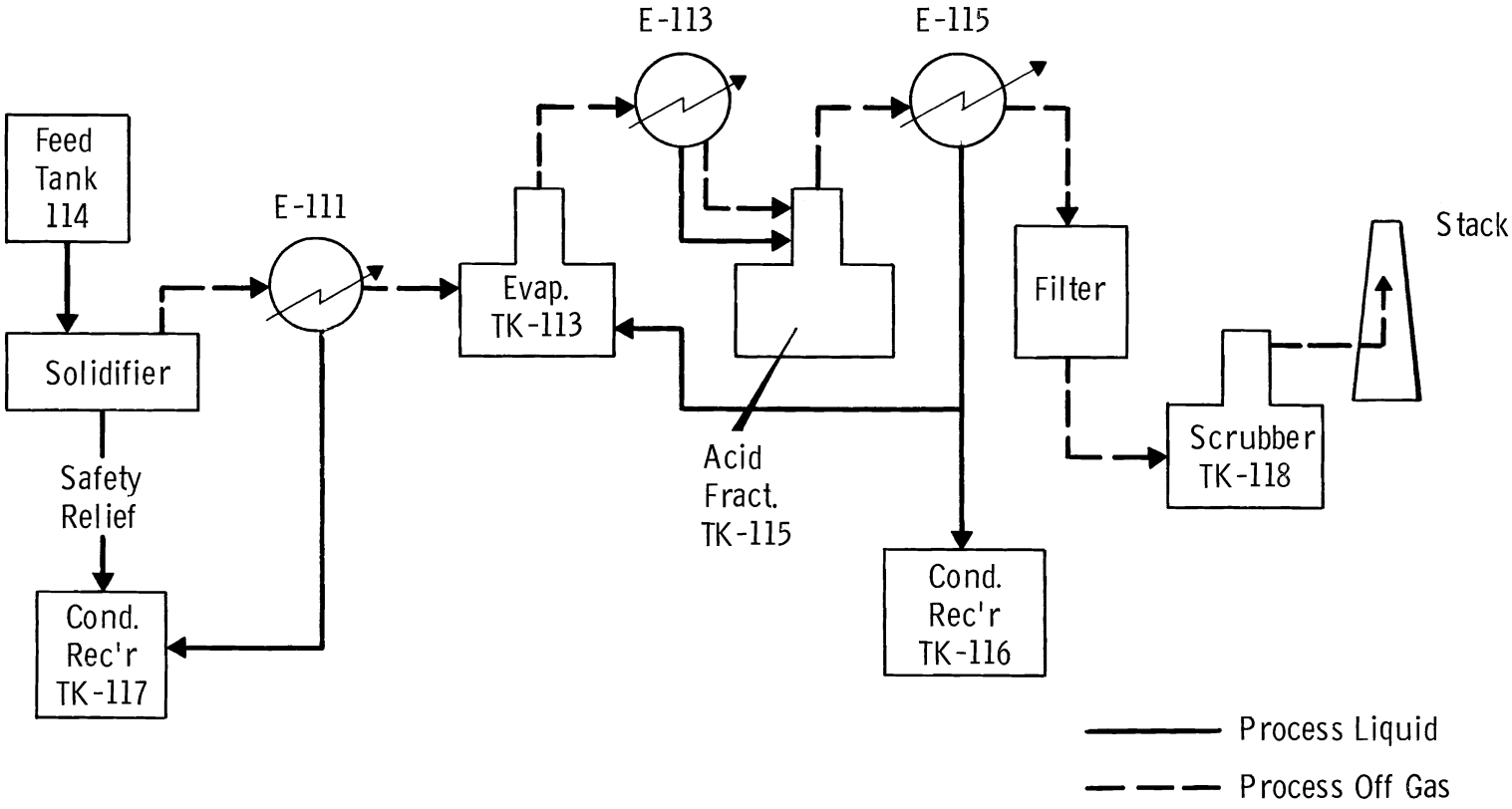

FIGURE 12. Schematic Equipment Arrangement for CSC-1

a vent for the calciner seal pot. Non-condensible gases were routed through the vent system to the scrubber (TK-118) where they were contacted with 1M caustic.

Simulated 303 liters/tonne U PW-1 without additives was dried in the calciner, operated at 710 °C. Feed rate averaged 21.6 liters/hr. Atomizing steam flow rate to the spray nozzle was 14 kg/hr at a pressure of 60 psig.

The calciner filter pressure drop remained quite low (2.7 in. of H_2O) throughout the run. The calciner was pressurized to 4 in. H_2O during filter blowback with a steam pressure of 40 psig. The pressurization decreased the water level in the calciner seal pot from 13 to 7 inches. With the lower seal, calcine was blown into the seal pot during blowback.

The heater on the calciner off-gas line was turned off just before the feed was started since the line temperature had reached 210 °C while spraying water through the feed nozzle. Off-gases entering the primary condenser (E-111) reached 250 °C while feed was on during the run. The evaporator tank accumulated 15 liters of liquid during the run, indicating that some of the off-gas was not condensed in E-111.

The six-zone induction-heated pot furnace was held at 500 °C while the pot was filled with powder. Powder level was determined by blowing air on the pot wall at a rate of 50 cfm. Pot centerline temperatures in zones full of powder would decrease only ∿10 °C/hr, while temperatures in empty zones would decrease at a rate of 150 °C/hr.

Following the run, calcine deposits on the calciner barrel wall and in the cone section under the barrel were found. A 1/8 in. thick coating of powder covered one side of the lower half of the barrel wall. A thick deposit was located on one side of the cone. The deposits were removed manually with a scraper and a wire brush, since the pneumatic hammer on top of

the calciner would not loosen the powder. Poor atomization of the feed-forming, coarse droplets caused the internal deposition. The spray nozzle was removed from the calciner and tested with air and water for a visual check of atomization quality. The spray pattern looked satisfactory except for a slight pulse in spray flow which occurred once every 30 seconds. The visual check is only a qualitative check of atomization, but it does show gross deficiencies.

The seal pot was removed and inspected for powder deposits. The seal pot inlet from the calciner contained a 3/16 in. thick coating of powder, and powder was mixed with the water in the pot.

Powder collected in the storage pot was dark brown and had a fine texture except for a few lumps of less than 1/2 in. diameter. Two hundred and sixty-five liters of 303 liters/tonne U feed produced 70 liters of calcine, giving a volume reduction factor of 3.8.

RUN CSC-2

CSC-2 was run to test a PW-2 feed containing sodium, lithium, aluminum, and phosphoric acid melt-forming additives, and to continue development of equipment operating techniques. Spray solidifier equipment arrangement was the same as CSC-1. Again, with no melter available, powder was collected in an 8 in. diameter storage pot. The auxiliary tanks and off-gas system were operated as shown in Figure 13, with the calciner condensate collected and concentrated in the evaporator (TK-113), and the evaporator condensate concentrated in the acid fractionator (TK-115).

The feed tested was found to melt at 700 °C and have a 650 °C stick-point, so the calciner furnaces were heated to 550 °C. An initial feed rate of 15 liters/hr was reduced to 10 liters/hr to maintain all calciner internal temperatures above 200 °C during the 13 hr run. Shortly after the run

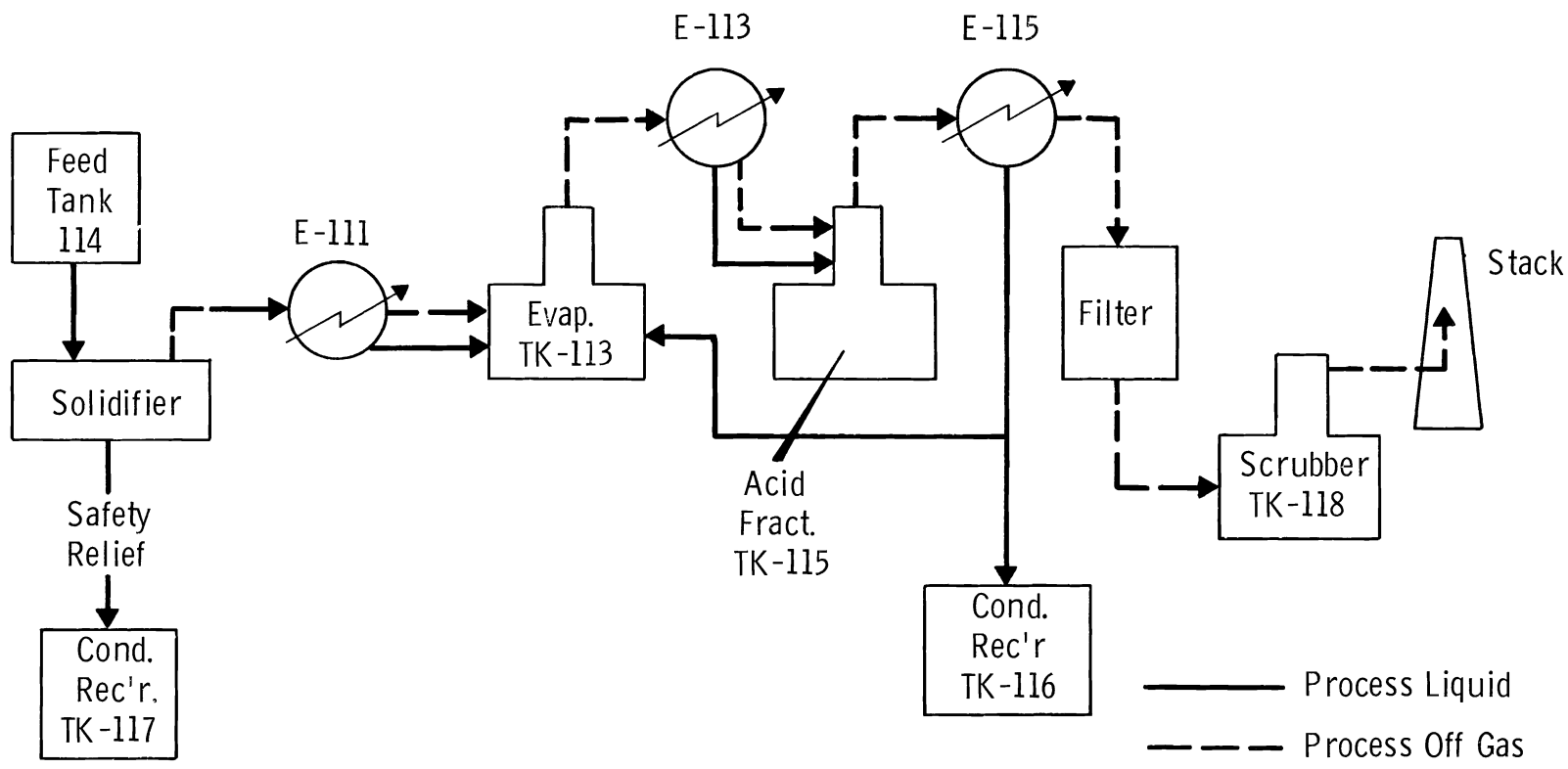

FIGURE 13. Schematic Equipment Arrangement for CSC-2

started, the furnace temperatures in the top two zones of the calciner were reduced to 525 °C and the bottom zone temperature was raised to 575 °C to give a more uniform profile of internal temperatures.

About 2 hr after the run started, the feed nozzle plugged and had to be removed to be cleaned. Plugging was attributed to calcination of feed in the nozzle liquid orifice by the superheated steam (300 °C) when the feed rate was reduced. The steam temperature was reduced to 200 °C for the rest of the run. The nozzle plugged twice more during the run but was immediately unplugged by actuation of the nozzle cleanout needle. The atomizing steam ports in the nozzle plugged shortly after the nozzle was re-installed and the nozzle had to be removed again. A white powder, probably scale from the steam line, was removed from the nozzle ports.

Wet powder was deposited on the internal walls of the calciner from the beginning of the run. Scale 1/4-3/4 in. thick was scraped from the walls while the spray nozzle was removed for unplugging. Near the end of the run, when the storage pot powder level had stopped increasing, the calciner was shut down for inspection. A large accumulation of powder blocking the calciner outlet to the storage pot was scraped into the pot. After the run, visual inspection in the calciner revealed a coating of powder 1/4 in. thick on the barrel walls and a 1/2 in. deposit in the cone section under the barrel. The powder had been wet, indicating poor spray atomization quality and possibly excessive feed rate. Widely fluctuating calciner internal temperature readings during the run indicated scale formation.

Thirty-nine kg of fine gray powder were produced from 138 liters of 863 liters/tonne feed. About half of this powder was removed from the inside of the calciner following the run.

A filter blowback pressure of 22 psig kept the filter pressure drop relatively low (3 in. H_2O, maximum) and prevented

calciner pressurization during the blowback. The absence of pressurization kept powder from accumulating in the seal pot as happened in CSC-1. A powder coating <1/16 in. thick was found on the filters following the run.

The feed nozzle was removed and tested with air and water following the run. The outside of the nozzle was covered with a thin coating of calcine, but this did not affect the nozzle performance. The nozzle flow pulsed at 5 to 10 sec/cycle with frequent blasts of large droplets emitting from the nozzle tip. Pulsing amplitude widened with increasing gas pressure, but atomization quality (finer droplets) generally improved with increasing gas pressure up to 60 psig (pressure used in the run). It was concluded that poor nozzle performance was responsible for the gross calcine deposition in the calciner.

The feed pump consumed an excessive amount of seal water during the run. After the run, the boron carbide seals and the carbon bearings were found to be badly worn. Both seals and bearings were replaced with new ones made of boron carbide.

Analysis of the calciner condensate concentrated in the evaporator showed that greater than 95% of the feed sulfate was retained in the powder product.

RUN CSCM-3

Following CSC-2, the melter equipment was received and installed below the calciner. The melter furnace was prepared for use by heating it gradually according to a schedule provided by the manufacturer. The schedule used to bake out moisture in the furnace insulation and coat the heating elements with a protective oxide film was as follows: 240 °C for 8 hr, 415 °C for 6 hr, 580 °C for 4.6 hr, 720 °C for 4 hr, 870 °C for 4 hr, 1010 °C for 4 hr, and 1280 °C for 2.3 hr.

Run CSCM-3 (cold spray calciner-melter) was made to test the calciner and melter equipment and fill a heated mild steel storage pot with a simulated high fission product Purex 1WW

melt. After 33 hr of intermittent feeding, the run ended when slag in the bottom of the melter plugged both the weir and the freeze valve, and the bottom of the calciner barrel was found to be plugged with wet calcine.

The calciner-melter was connected to the auxiliary tanks as in CSC-2. In this run, however, the evaporator and fractionator were not boiling as in CSC-2. Condensate was collected in the evaporator.

The average feed rate for the run (when feed was on) was 16.1 liters/hr with the calciner furnaces at 700 °C. Poor feed atomization caused the formation of wet calcine deposits in the calciner cone, even though a new external-mix nozzle was used. Eventually, calcine bridged across the bottom 2 feet of the calciner barrel. The walls above the plug were coated with <1/4 in. of powder, which is the normal steady-state thickness. Before the run, a motor-driven stainless steel chain about 8 in. long was inserted through a port in the side of the calciner cone to remove deposits around the calciner outlet to the melter, The chain, dangling freely into the calciner powder outlet, began rotating at about 50 rpm when the motor was started and knocked calcine deposits into the melter. The effectiveness of the chain could not be evaluated since, at the end of the run, it was missing. No trace of the chain was discovered but sometime during the run it disconnected from the motor shaft and fell into the melter where it dissolved. The presence of the metal chain in the melt started the corrosion of the platinum melter which eventually failed in CSCM-8.

A vertical-operating free-piston air vibrator was installed on the top of the calciner before the run to replace the piston-driven hammer. Neither the air vibrator nor the hammer removed the wet calcine deposits but the vibrator required less space and operated more reliably than the hammer. The hammer shaft had often broken in previous runs with the developmental spray calciner.

Calciner filter performance was excellent. The filter pressure drop reached only 5 in. H_2O. Blowback steam pressure was maintained at 22 psig except early in the run when the pressure built up to 120 psig because the pre-heater blowdown valve was closed. An off-gas particulate de-entrainment factor (DF) of 1600 based on sodium analyses of the off-gas condensate was obtained. This DF is in the range desired for the spray solidification process.

Early in the run, it became apparent tnat the flux content of the feed was too low since the calcine melted at 1050 °C. Five hours after the feed was turned on, melt began to drip from the melter weir, but it stopped almost immediately when melt in the weir tip froze. Heating the weir furnace to 1050 °C would not open the valve. For most of the run, melt was drained in batches of 1.5 liters from the freeze valve. Near the end of the run, melt could not be discharged from either valve. The spray solidification equipment was shut down and the melter was removed from the furnace to shorten both discharge valves. The weir was shortened by 1 1/2 in. while 1 in. was cut from the freeze valve. The melter was re-installed, but after prolonged heating at higher than design temperatures without melt discharge, both weir and freeze valve heaters burned out. After it was disconnected from the calciner, the melter was raised 6 in. in the furnace to bring the valves into the heated zone. Melt would not drain by this means. By probing into the melter, it was found that the melt had formed two layers with a viscous layer on the bottom. Nine kg of sodium monobasic phosphate ($NaH_2PO_4 \cdot H_2O$) were added to the melter over a period of several hours to dissolve the viscous layer, but with little success. The melter was eventually emptied by scooping out the slag with a stainless steel rod. The slag was identified as rare earth phosphate.

Liquid level in the melter was continuously monitored with a liquid level probe, called a pulse reflectometer, developed

by Dozer.[22] The probe employs a technique for detecting impedance mismatches in radio-frequency transmission lines. In this application, the mismatch (the liquid level rising between two concentric platinum tubes inserted in the melter) was located by noting the position of a discontinuity in a wave trace on an oscilloscope screen. The wave was propagated along the inner probe by a pulse generator and the discontinuity was caused when the wave encountered the melt level. Part of the wave was reflected backward, thereby distorting the original pulse and showing a discontinuity on the oscilloscope trace. The probe operated reliably during the run.

The mild steel melt storage pot was heated to 400 °C at the bottom to prevent corrosion, and to 700 °C at the top to slump the melt and fill the pot evenly. These temperatures were too low since a melt stalagmite 4 ft long built up from the bottom of the pot. The outer wall of the pot exposed to 700 °C was oxidized, but not excessively. Flakes up to 10 mils thick peeled off the outer wall during the 50 hr heating period.

Following the run, several external-mix spray nozzles were visually compared for atomization quality with air and water. The prototype spray nozzle performed better than the others tested.

Two 4 hr calciner runs (CSCM -3a and 3b) were made to compare the performance of air with steam as atomizing gas. The prototype spray nozzle was used with a nominal feed rate of 15 liters/hr. Atomizing gas pressure was maintained at 60 psig. Air atomization left virtually no powder deposits in the calciner, while atomizing steam coated the calciner barrel and deposited a 3 in. thick layer of powder in the cone under the barrel. It was decided to use air atomization for future runs.

Inspection of the feed pump after the run revealed that the boron carbide bearings were badly chipped. The cause of the damage was not discovered. Graphite bearings were installed for testing in the pump.

RUN CSCM-4

Air atomization of PW-1 feed was successfully tested in a 65.5 hr run. Simulated PW-1 waste with added phosphoric acid to give M^+/P equal to 1.86 was fed to the spray solidifier at an average rate of 16 liters/hr. Solidifier off-gas was routed as in CSCM-3, with condensate collection in TK-113. Neither TK-113 nor TK-115 was heated. Air-heated to 360 °C was used as atomizing gas and proved to give better atomization quality than steam had in previous runs. After the run, the upper 3 ft of the calciner walls were excessively coated with a 1/4 in. layer of powder containing many 1/2 in. diameter lumps. The bottom half of the barrel and the calciner cone had up to 1/8 in. thickness of powder. A 2 in. thick ring of partially melted calcine formed around the melter inlet and occasionally held up powder in the cone during the run. External cooling around this section would probably have eliminated this buildup.

Calciner vacuum was maintained at only 6-8 in. H_2O and, during filter blowback, the calciner pressurized up to 2 in. H_2O. The additional air load from air atomization taxed the capacity of the off-gas jet and made it impossible to maintain a negative pressure in the calciner during filter blowback. These pressurizations emptied the seal pot several times and blew calcine into it.

The calciner filter pressure drop remained low (5 in. H_2O) throughout the run. Examination of the filters following the run, however, showed one filter to be coated with more than an inch of damp powder. The other 14 filters were coated with only 1/16 to 1/8 in. thickness. A few small wet calcine stalactites hung down from the bottom of the filter assembly. Apparently, the filters cooled enough to promote condensation during the run.

The melter furnace was operated at 1200 °C, while melt temperatures varied between 875 and 1050 °C. Attempts to thaw the melt in the freeze valve were unsuccessful, and the freeze valve furnace burned out when operated at the excessive temperature of 1130 °C. The melt plug at the tip of the freeze valve did not soften, but the temperature at this location was an estimated 200 °C cooler than at the thermocouple position. Melt discharged dropwise from the weir at a rate of about one liter/hr.

The melt fell off-center and hit against the wall of the 304-L SS storage pot about 2 ft from the top and eventually formed a solid bridge from which a stalagmite of melt built up. The pot furnace temperature was increased from 800 to 975 °C, but the bridge would not slump into the bottom of the pot. Since only alternate pot zones (2, 4, and 6) were directly heated, the pot wall temperature where the melt bridge formed was only 725 to 750 °C, or about 200 °C below the slump temperature of the melt. The pot was not heated higher in order to prevent corrosion. Twice during the run, the pot was rolled back from under the melter to break down the melt formations manually. Some of the melt was chipped out, but a layer about 4 in. thick was extremely hard and could not be removed until after the run when a jackhammer was used. While the pot was moved from under the melter, product was caught in 600 ml stainless steel beakers held under the melter weir. About 80% of the 193 kg of melt produced was collected in the beakers. The melt was a black glass with a density of 3.15 g/cm^2.

A particulate de-entrainment factor of only 56 was achieved from feed to primary condensate. This value is acceptable but is below the DF's desired, and is below the normal by a factor of about 50. The cause of this low de-entrainment is unknown.

RUN CSCM-5

Run CSCM-5 was made to test the spray solidifier with PW-2 feed from which the sulfate was to be volatilized. In addition, the actual WSEP calciner resistance furnace had been received and was used. An external cooling ring was installed around the melter inlet to prevent an accumulation of sintered powder at this location.

Simulated PW-2 with added phosphoric acid concentration to bring M^+/P equal to 1.81 was sprayed to the calciner at an average rate of 18.6 liters/hr. The feed was air-atomized and the calciner three-zone resistance furnace was heated to 730 °C. About 6 hr after the run started, the feed nozzle plugged momentarily but was cleared with a clean-out needle. The nozzle plugged several other times during the run and was unplugged each time with the clean-out needle. Lowering the atomizing air temperature from 375 °C to 300 °C and decreasing the feed temperature from 67 °C to 45 °C did not prevent the plugs. Since lowering the nozzle temperature did not prevent plugging, the plugs were likely formed externally on the tip by erratic spray patterns rather than by calcination in the tip of the nozzle liquid orifice. In fact, the nozzle was coated externally with wet calcine at the end of the run, although both air and liquid orifices were clean.

Condensate collection and off-gas scrubbing was operated as in runs 2 to 4 with TK-113 as the condensate catch tank, and with neither TK-113 nor TK-115 heated. The external dome of the titanium condenser (E-111) was cooled by running cold water over it as an added safety measure to reduce possible corrosion by the sulfate-bearing off-gas entering the condenser at 175 to 190 °C. The condenser wall thickness was measured ultrasonically

following the run. A general 5 mil increase in wall thickness since run CSC-2 was noted indicating the formation of scale.

The calciner vacuum was maintained at a nominal 10 in. H_2O. A vacuum of about 2 in. H_2O was achieved during filter blowback gas heater burned out when the control temperature transmitter blew a fuse, allowing an uncontrolled temperature rise in the heater. The filters were blown back with saturated steam for 2 hr before the heater failure was detected. Blowback was resumed for the rest of the run with unheated air. The filter differential pressure increased steadily from 5 to 10 in. H_2O over an 18 hr period, then increased sharply to 27.5 in. H_2O in 30 sec. Intermittent blowback with 40 psig air in 5 sec pulses reduced the pressure drop to 5 in. H_2O in about 5 minutes. In about 3 hr, the filters plugged again and were blown down. This time, though, the run was discontinued after 21.5 hr of feeding, since the calciner bottom outlet was plugged with calcine. The filters were almost completely caked with damp calcine deposits up to an inch thick. The damp deposits were identified as condensed sulfuric acid mixed with calcine. The filters were removed from the calciner, and sprayed and soaked in cold water for several hours following the run.

During the run, powder accumulated in the calciner cone. It was necessary to manually rod the powder into the melter to prevent plugging of the calciner outlet. Following the run, the calciner barrel contained a 1/8 in. coating of powder. The cone walls were covered with damp calcine, and large lumps of wet calcine plugged the calciner outlet. The cone deposits, like the filter deposits, were caused by condensation of sulfuric acid.

The melter furnace was started at 1150 °C, but when sintered calcine began forming on the melter walls, the temperature was increased to 1200 °C to melt the wall deposits. The melt was quite fluid and bubbled with the evolving sulfate. During filter blowback, the melt surged out of the weir and the stream left the weir tip at an angle allowing melt to hit the inner wall of the storage pot at the middle of the top zone. The weir tip was bevelled facing inward. The melt gradually formed stalagmites which grew up into the melter sample chamber. All six zones of the pot induction furnace were heated to 900 °C, since the three zones previously used on the calciner furnace were replaced by the new resistance furnace. The melt formation on the pot wall did not slump down when the pot was heated to 950 °C. Once, the receiver was rolled back and a stalagmite was lifted from the pot. At another time, a stalagmite was knocked down by rodding through the sample chamber window. When the run was stopped, the pot contained about 12 liters of melt. The inside wall of the pot in the top zone was corroded where melt had hit throughout the run. Corrosion caused by excessive melt temperatures in the pot, penetrated 1/8 in. into the wall in spots. This rate greatly exceeds that desired for WSEP runs.

It was necessary to manually rod the freeze valve to make it discharge at the end of the run. Although the freeze valve furnace temperature was 1090 °C. the valve tip temperature was only 900 °C.

The cooling ring at the melter inlet prevented the formation of sintered calcine, but wet powder collected on the inner neck because of sulfate condensation. Allowance for thermal expansion of the calciner was inadequate since the melter top was buckled about 1/8 in. around the melter neck.

This run verified previous conjecture that sulfate must be retained in the product not only to prevent corrosion but to prevent internal fouling of the calciner.

The calciner resistance furnace ran smoothly, performing as well as the induction furnace had in previous runs.

RUN CSCM-6

PW-1 feed with three different additive concentrations was tested in run CSCM-6. The effect on melt viscosity by varying feed M^+/P was observed. In addition, pot filling by continuous drip overflow and batch dumping through the modified melter weir was tested.

Three feed batches with added phosphoric acid to give M^+/P's of 2.1, 2.2, and 2.4, and added sodium concentrations of 0.9M, 0.83M, and 0.9M, respectively, (378 liters/tonne U basis) were solidified in a 66 1/4 hr run. It was found that melt viscosity increased with M^+/P. The first feed batch (M^+/P = 2.2) was run for 37 3/4 hr and produced a slightly viscous melt at 1100 °C. The second batch (M^+/P =2.4) was much more viscous and after 9.6 hr it plugged the melter weir. The weir was unplugged by rodding up into the tip. Phosphoric acid added to the second batch to alter the M^+/P to 2.1 produced a free-flowing melt for the balance of the run. An average feed rate of 20.9 liters/hr was attained for the run. The calciner drying capacity was established at 28 liters/hr over a six-hour period with a calciner furnace temperature of 700 °C. At this rate, the spray solidifier could treat waste generated from a 1.5 tonnes of uranium/day fuels reprocessing plant. Occasionally, solids accumulated behind the feed valve stem caused momentary feed flow oscillations when the valve opened wider in attempting to maintain the flow.

Near the end of the run, the calciner was pressurized from 2 to 4 in. H_2O during filter blowback with 28 psig steam. The seal pot was emptied by the pressurizations and calcine nearly sealed off the pot entry pipe. Filter pressure drop remained relatively low at 9 in. H_2O. After the run, all of the filters except one bank were clean. Dry powder had bridged between the three filters in the bank. It appeared that this bank had not been blown back. The blowback solenoid valve may have stuck shut.

Before the run, the bevelled tip of the melter weir was cut facing away from the receiver pot vertical centerline. In previous runs, with the tip cut 180° opposite, melt was thrown outwards against the pot walls where stalagmites were formed. The tip modification directed the melt flow towards the center of the pot so that no melt deposits formed on the pot wall. Melt spattered inside the weir liner, however, and threatened to plug the weir outlet several times. The outlet was cleaned by manual rodding and scraping through the sample chamber window. Spattering was most prevalent during batch dumpings or when viscous melt was discharged dropwise. Filter blowback caused melt surges and spattering from the weir. During the run, the weir furnace heating elements contacted the platinum liner and fused a jagged hole about 5 in. long in the liner. The furnace blew fuses periodically but continued operating throughout the run. The freeze valve furnace burned out the first time it was turned on.

Melt was occasionally batch-dumped through the weir by decreasing the differential pressure between melter and receiver. Batches of 3.5 liters were discharged at rates up to 28 liters/hr. With the pot furnace temperature of 900 °C, drip discharge of melt formed a small stalagmite in the bottom of the pot. When the temperature was increased to 950 °C, the stalagmite slumped and spread out to the pot walls. Thereafter, the pot

temperature was increased to 950 °C for 2 hr in each 12-hr interval to prevent any stalagmite formation.

Melt level in the product receiver could not be detected by blowing air on the pot wall and observing relative temperature drops in wall temperatures. The temperature drops were insensitive and inconsistent. This technique was successful in previous runs when the pot contained internal thermocouples. While the receiver was cooled to 600 °C for the above test, a melt stalagmite about 3 1/2 ft long built up to within 8 in. of the top of the pot. Since this occurred near the end of the run, the pot temperature was not increased to 950 °C long enough to slump the stalagmite. Below the stalagmite, the pot was filled uniformly to a level of 4 ft.

The solidifier off-gas was condensed and routed to the evaporator (TK-113). Condensate was boiled to maintain a volume of 120-170 liters. Strip water routed from the acid fractionator (TK-115) overhead condenser to the evaporator maintained the evaporator bottoms acidity between 5 and 8M. The fractionator bottoms were concentrated to a final acidity of 8.2M.

The pulse reflectometer was used to measure melter liquid level throughout the run. At first, the probe measured the level quite accurately, but later the level readings were insensitive to decreases in melt level following batch dumping. Melt probably bridged in the annulus between the outer and inner tubes of the probe, thus indicating a false high level reading.

After the run, elongated fist-sized lumps of dry calcine were found in the calciner cone outlet. These lumps may have formed on the internal calciner thermocouples during periods of oscillating feed rates. A layer of fine dry powder had built up in the cone under the filters. The angle of repose of the powder, it was concluded, was about 3° more than the

60° slope of the cone. This accumulation presents no problems as long as the powder is dry, since it reaches an equilibrium angle and thickness before falling into the melter. The other internal surfaces of the calciner were free from deposits >1/8 in thick. The cooling air on the melter neck prevented scaling at the melter inlet.

A crack 1 1/2 in. long was found in the melter weir tip after the run. The crack may have been caused by rodding up into the weir to promote melt flow during the run.

An exceptionally good particulate de-entrainment factor of 6000 was attained from calciner feed to primary condensate. A DF of this magnitude indicated that the calciner filters were not cracked or corroded during removal, flushing, and reinstallation before the run.

RUN CSCM-7

Spray solidification DVT's in the 321 Building cold semi-works were concluded with CSCM-7. Following this run, the equipment was moved to its permanent location in B-Cell in the 324 Building for further testing.

Run CSCM-7 was made to test a PW-2 feed which would retain the sulfate in the melt product. In addition, the storage pot was to be filled by continuous drip from the melter weir modified by the addition of a flow-straightening rod on its tip.

PW-2 feed modified by addition of 1.17M lithium, 0.6M calcium, 0.25M aluminum, and 1.61M phosphoric acid (378 liters/tonne U basis) was fed to the calciner in a 41 hr run. Granular sodium metaphosphate was added directly to the melter in an equivalent feed concentration of 1.27. This addition lowered the calcine melting point from 900 °C to 700 °C. During the first half of the run, an average feed rate of only 10.3 liters/hr was attained due to partial plugging of the air passage in the feed spray nozzle. When the nozzle was cleaned, the average feed

rate was increased to 16.4 liters/hr for the second half of the run. When the nozzle was removed for cleaning, large deposits of calcine were rodded from the calciner cone and lower barrel into the melter. These deposits formed during the first half of the run as a result of poor feed atomization by the plugged nozzle. Feed flow control with the new feed valve was excellent compared to the cyclic rates achieved with the valve used in previous runs. The new valve contained a spline trim with 3/4 in. maximum travel as compared to the plug trim 1/2 in. travel of the valve used previously.

The spray solidifier capacity of 17 liters/hr was determined with this particular combination of PW-2 and additives. The melter operating at a 950 °C furnace temperature limited the feed rate. At this rate, waste generated from processing 0.83 tonnes of uranium/day could be solidified.

Off-gas condensate was collected in TK-113. Neither TK-113 nor TK-115 was heated.

Initially, sodium metaphosphate powder was added to the melter with a temporarily installed auger feeder, but since the auger hopper could not be sealed, powder was swept into the melter by excessive air in-leakage. Shortly, the solids addition nozzle on the calciner cone plugged when condensate mixed with the sodium metaphosphate. For the final two-thirds of the run, the solids were manually batch-dumped in one-liter volumes into the melter through a nozzle on the melter lid.

A strip of platinum 5/8 in. long and 1/8 in. thick was welded to the inside of the weir tip to prevent melt spattering on the weir liner during discharge. Although the spattering was not eliminated, it was reduced to the extent that only a small harmless melt stalactite had formed which was easily removed from the weir heater thermocouple.

The freeze valve was used to drain the melter at the end of the run after it was rodded to remove the higher melting point solids from the previous run. Once it started draining, the freeze valve could not be stopped by blowing cold air on the liner. When the melter was drained, the valve sealed itself.

The calciner filter pressure drop remained satisfactory at between 3 and 7 in. of water even though the blowback heater was off for 12 hr early in the run. A faulty control thermocouple in the heater cut off the power and the filters were blown back with saturated steam. A long stalactite of wet calcine formed on one of the filters during this time and was removed when the calciner was cleaned out midway through the run.

The storage pot was filled with melt to within 14 1/2 in. of the top with a hole 15 in. deep penetrating the top of the melt. Small spatters of melt were accumulated on the inner walls of the pot. Melt level was visually detected during the run with mirrors inserted in the sample chamber window. Pot internal temperature response to cold air blown on the pot wall indicated the approximate melt level at the end of the run. Melt was a light green semi-glassy solid with a density of 2.7 g/cm^2. Five hundred and forty liters of 492 liters/tonne feed produced 70 liters of melt for a volume reduction factor of 7.7.

Following the run, the calciner internal walls were coated with normal steady state patches of powder up to 1/16 in. thick in the barrel and up to 1/2 in. in the cone. The excessive cone deposits were probably formed during erratic spray nozzle performance in the first half of the run. All but two of the filters had a normal coating of 1/16 in. of powder. The two, located in separate blowback banks, had coatings of 1/4 in. thickness. When the filters were removed for transfer to 324 Building, many small holes 1/32-1/16 in. diameter penetrating halfway through the filter walls were discovered. It was thought that the holes were formed by dissolution of impurity inclusions in the sintered

metal and that the filters were still serviceable. For unknown reasons, the particulate DF of 12,000 was twice as high as achieved in any previous run.

Although the seal pot purge air was heated to about 200 °C with a small rod heater to prevent condensation in the seal pot inlet, dry powder partially filled the inlet about 2/3 full. The powder plug probably formed during the first half of the run when more pressure fluctuations occurred than in the last half. The seal pot had been modified by lowering the internal baffle to increase the effective water seal from 25 to 29 in. A wide spot was added at the pot discharge for disengagement of water and gas. During the first half of the run, the seal pot blew several times, but required no water addition during the final 20 hr of the run.

RUN CSCM-8

CSCM-8 was the first spray solidification run with the equipment located in its permanent position in B-Cell in the 324 Building (see Figure 14). The run objectives included testing the WSEP equipment under actual operating conditions for radioactive demonstrations. Also, a new PW-1 feed composition and several equipment modifications were to be tested, and a storage pot was to be half-filled by batch-dumping through the melter freeze valve.

In CSCM-8, simulated PW-1 with added lithium (0.5M), sodium (0.5M), and phosphoric acid (1.74M) was heated to 70 °C and fed to the calciner at an average rate of 19.3 liters/hr. The feed nozzle (Spraying Systems Co., Set-up No. 5) gas and liquid inlets were separated from their previous annular locations to minimize the possibility of atomizing steam condensation within the nozzle. In addition, a mist eliminator composed of an internally baffled cylinder containing wire-mesh packing was installed in the atomizing gas line upstream from the atomizing gas preheater. Qualitative atomization

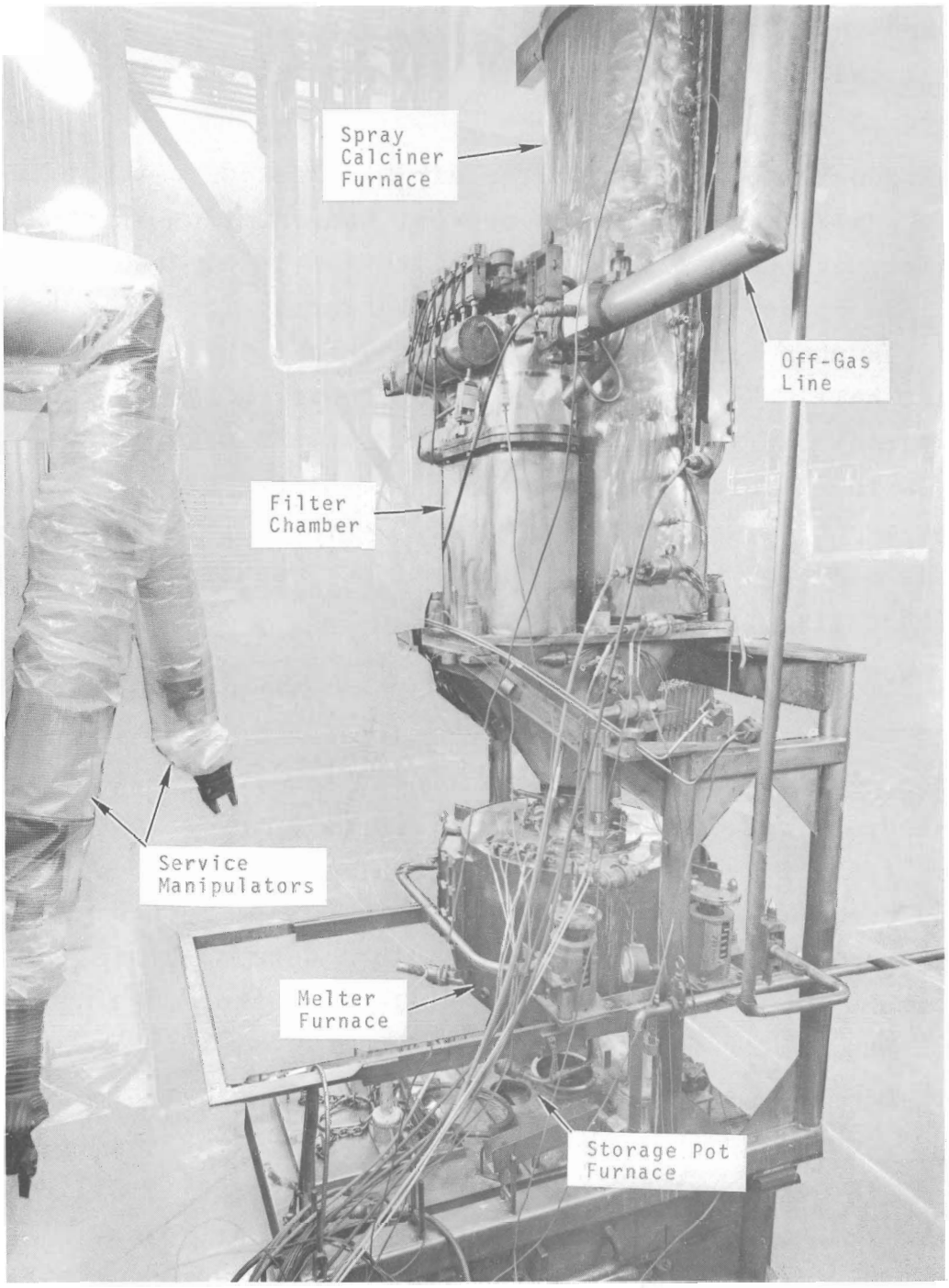

Neg 0662668-5

FIGURE 14. WSEP Spray Solidifier Installed In B-Cell

tests with this apparatus had indicated that steam atomized water as well as air if the steam quality was improved by condensate droplet removal. Wide feed flow fluctuations probably caused by a partially plugged nozzle were experienced for the first 8 hr of the run. The feed nozzle plugged at the end of this time, and was unplugged with the cleanout needle. Afterwards, feed flow was relatively smooth for the rest of the run.

After the run, inspection inside the calciner showed that the calciner barrel was clean while the cone surface below the barrel was covered with 1 in. of calcine which had been wet. This deposit may have formed during the period of the erratic feed flow. The mist eliminator improved the steam atomization performance over previous runs with steam.

After the first 8 hr of the run, the calciner vacuum was maintained at 2 in. of water during filter blowback with 20 psig steam. The calciner pressurized slightly several times in the first 8 hr and the seal pot was blown once. At the end of the run, the seal pot inlet from the calciner was half-full of powder. A seal pot backpurge of 10-15 scfh of heated air did not prevent the powder accumulation when calciner pressurizations occurred.

The calciner filter pressure drop remained satisfactory between 4 and 9 in. of water during the run. All the filters except two were covered with the normal 1/16 in. coating of powder at the end of the run. Two filters, one which plugged in CSCM-7, were heavily coated with loose powder. Subsequent measurement of the diameter of their respective blowback nozzles showed no significant variation from the other nozzles. On this evidence, insufficient blowback flow was ruled out as the cause of plugging.

Condensate was collected in TK-113, and neither TK-113 nor TK-115 was heated. Spray nozzle flush liquid was pumped from TK-113 at the beginning and end of the run. Melt was batch-dumped in 3-4 liter slugs from the freeze valve at rates of 10-12 liters/hr. It was necessary to raise the melter furnace temperature from 1100 to 1150 °C to provide extra heat to dump the freeze valve. Calcine melted without foaming and the melt drained smoothly without spattering on the freeze valve liner. The melter weir tip had been modified by the addition of a flow-straightening vane to prevent melt spattering and guide the melt stream to the center of the storage pot. The vane consisted of a 50 mil thick platinum plate, 2 in. long and 3/16 in. wide, welded lengthwise on edge inside the weir orifice and extending down flush with the bevelled weir tip. The weir could not be tested, however, since the heater failed early in the run. The loss of the weir furnace was attributed to corrosion of brass connectors erroneously used in fabrication to join the furnace elements to the electrical lead wires.

The remotely operated, retractable mirror in the melter sample chamber was of little use for viewing into the melt receiver. The mirror surface became clouded and would not reflect. The air sweep did not keep the mirror surface clean.

Melt filled the heated 8 in. diameter storage pot to a level of about 35 in. (29 liters volume) without stalagmite formation. Pot furnace zones below and at the melt level were heated to 880 °C, while zones above the melt level were maintained at 830 °C. A new six-zone resistance furnace replaced the induction furnace used in previous runs . Both furnaces operated satisfactorily and were comparatively similar. Three extra thermowells for future product thermal conductivity tests were inserted through the bottom of the pot before the run.

The pot was sectioned radially after the run. Many gas bubbles up to 1/4 in. diameter were formed in the melt. Product was a dark gray crystalline solid with a density of 3.05 g/cm^2.

A drop of melt was observed hanging from the bottom of the melter about 6 hr before the end of the run. Closer examination after the run revealed the presence of a star-shaped crack about 1 in. long penetrating the 80 mil-thick bottom of the melter (see Figure 15). A smaller crack was located about midway down on the freeze valve. From X-rays of the entire melter, about 20 pitted areas ranging in depth 5-15 mils and 1/16-1/2 in. in diameter were found. The pits were located on the inside wall of the melter cone, an area usually covered with melt during normal operation, and in the freeze valve tube near the crack. Photomicrographs of cross-sections of the pits showed a filigree structure typical of corrosion.

Although microprobe tests for alloying in the metal surrounding the cracks were too insensitive (>3 wt% detection limit for phosphorous) to substantiate the following evidence, later laboratory tests to reproduce the melter failure indicated that the embrittlement was caused by phosphorous alloying with the platinum under locally reducing conditions, such as from inadvertent addition of stainless steel to the melter. The failures were brittle fractures at grain boundaries.[23]

Before its failure, the melter (composed of 99.5% platinum –0.5% rhodium alloy) had operated between 900 and 1250 °C for 440 hr. Since the cause of the corrosion was not known at the time, a new melter was ordered and the replacement vessel was fabricated from unalloyed platinum.

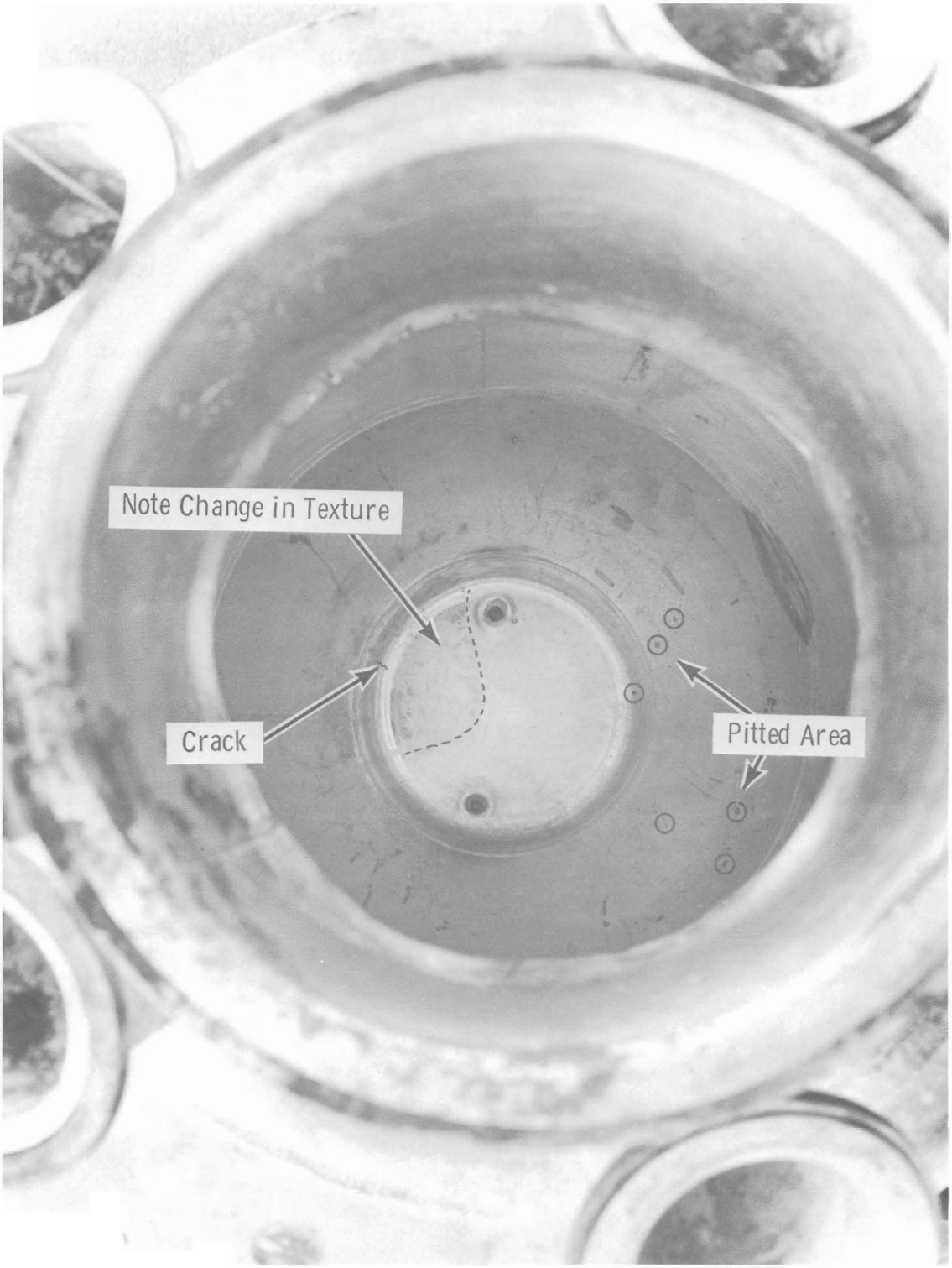

Neg 42443-1

FIGURE 15. View into Corroded WSEP Melter

RUN CSCM-9

Run CSCM-9 was made to test spray solidification of a chemically adjusted PW-2 solution with addition of solid $NaPO_3$ flux to the melter from a vibrating trough feeder. A heated carbon steel storage pot was to be filled to determine if pots of this material were sufficiently corrosion resistant to be used in the WSEP.

Simulated PW-2 preheated to 63 °C was fed at an average rate of 11.7 liters/hr for 8.1 hr to the calciner heated to 670 °C. The liquid feed contained additives of calcium, lithium, aluminum, and phosphate giving a M^+/P equal to 2.75. The addition of 3-6 mesh $NaPO_3$ chips directly to the melter changed the calcine melting point from 900 to 700 °C and decreased the M^+/P to 2.0. The evaluation of steam atomization with the inline mist eliminator was again clouded by the partial failure of the steam heater. The steam could not be heated above 220 °C since one of the two heating elements failed due to an electrical current overload. Normally, atomizing steam was heated to at least 300 °C. Consequently, by the end of the run, poorly atomized feed formed a 3/4 in. thick scale deposit in the cone below the feed nozzle. The calciner barrel was free of deposition.

The spray nozzle plugged after 3 hr of feeding. Attempts to unplug the nozzle with the clean-out needle were unsuccessful and the nozzle had to be removed from the calciner for manual cleaning. The feed side orifice was plugged by calcined feed. When feeding was resumed, the clean-out needle was exercised every 30 min and no further plugging occurred.

Calciner filter pressure drop was normal at 7.8 in. H_2O about half-way through the run. At this time, the calciner vacuum pressure tap, which is common to one side of the filter

pressure drop instrumentation, plugged and no further accurate readings of either vacuum or pressure drop were obtained. At the end of the run, all filters except two are coated with 1/16-1/8 in. of powder. The two filters which plugged in CSCM-8 again were covered with a 1/4 in. layer of powder. The coating on all the filters was reduced to less than 1/16 in. by blowing back in the normal two-min cycle with 60 psig air for a 30 min period. A 1 in. layer of dry powder accumulated in the cone under the filter chamber, thus confirming observations from previous runs that the angle of repose of the powder exceeded the cone angle. The calciner seal pot entrance line was partially blocked with an inch of powder.

The WSEP feed line water flush system was used for the first time and operated satisfactorily before and after the run. The water flush was used to purge feed from the line at shutdown so calcination of feed would not plug the nozzle. The 40 liter flush tank was filled and pressurized to about 40 psig by P-116 which pumped fractionator condensate from TK-116. The tank would not hold pressure, however, when the tank inlet, outlet, and vent valves were closed and P-116 was turned off. For the radioactive WSEP runs, it is necessary to keep the flush system pressurized higher than the feed system to prevent possible feed contamination of the disposable low-level effluent in TK-116.

The developmental platinum melter was used to temporarily replace the melter which corroded in CSCM-8. The melter furnace was operated between 900 and 950 °C. Solid flux was added through a 2 in. diameter port in the top of the melter. The vibrating trough solids feeder discharged $NaPO_3$ chips intermittently through a 2 in. pipe connected to the melter port. Chips were stored in a 2 ft^3, cylindrical hopper located above the

trough feeder. The complete solids feeding system was "sealed" and vented through the melter. The seal was not adequate, however, and the feeder was a source of air in-leakage which made it difficult to maintain adequate calciner vacuum. A double ball valve manual feeder was later used successfully in the WSEP demonstrations.

Due to improper pressure balance between melter and melt receiver, air sparged up through the weir causing severe melt spattering. The spatters partially plugged the powder inlet from the calciner and the solids feeder entrance to the melter. The solids feeder line was manually rodded several times during the run. This plugging forced early termination of the run after 8.1 hr of feeding. Sparging prevented the use of the weir for melt discharge, so melt was batch dumped through the freeze valve. The sparging problem would have been almost nonexistent with the WSEP melter, since the developmental melter weir did not have the built-in 2 in. seal existing in the prototype melter. By reducing the differential pressure across the melter while the melt level was established, sparging could have been averted.

Greater than 96% of the feed sulfate was consolidated in the product. The volatile portion, however, was evident as sulfuric acid condensation in the melter sample chamber, leaving a hazy film on the air-purged viewing mirrors. Viewing into the pot and up into the melter discharge valves with the mirror was eventually obscured so the purge air was turned off.

Melt was collected without stalagmite formation or spattering by intermittent dumping of the freeze valve. The pot was filled to a volume of 8 liters with a gray-green crystalline solid. Product density was 2.8 g/cm^2. The bottom pot zone was heated to 700 °C and the top five zones were maintained at 650 °C during the run. An ultrasonic wall thickness scan was run on the

pot after the run. The average corrosion rate on the wall in the 700 °C zone was 6 mils/day, although in one small area a maximum rate of 24 mils/day was noted. In the 650 °C zones, the average wall oxidation rate was 2 mils/day. This run showed that carbon steel pots can be used for storage of the PW-2 melt tested.

Spray solidifier condensate was collected in TK-113, as in most of the previous runs. Neither TK-113 nor TK-115 was heated. Corrosion rates in the solidifier off-gas line and primary condenser E-111 were negligible.

RUN C

Objectives of run C included testing steam atomization of feed, determination of ruthenium retention in the product, and demonstration of the use of a sugar reducing solution for retention of ruthenium in the condensate evaporator (TK-113). During the last third of the run, the feed was to be spiked with radioactive ruthenium tracer. The run was shortened to 15 hr by an excessive calciner filter pressure drop, however, so the tracer was not added to the feed.

Simulated PW-2 was fed to the spray solidifier for 15 hr at an average flow rate of 18.1 liters/hr. As in CSCM-9, lithium, calcium, aluminum, and phosphate were added to the liquid feed to keep sulfate in the melt product. Solid $NaPO_3$ flux was added to the melter to lower the calcine melting point from 900 °C to 700 °C. For the first time, a full spike of cold ruthenium was added to the feed instead of the manganese ion substitute used in previous runs. The liquid feed without the additives and sulfate and molybdate was digested for 16 hr before the run by refluxing the solution in the auxiliary feed makeup tank, TK-112. This step was added to the feed

makeup in an attempt to equilibrate the ruthenium nitrate species so that ruthenium equilibrium status would not be a variable to consider if ruthenium volatilization was to be predicted in future runs. During digestion, air sparging promoted nitric acid vapor entrainment through the tank condenser (E-112). Some of the vapor condensed in the tank vent filter (F-113), soaking and partially dissolving the filter. No detectable amounts of ruthenium evolved during the digestion.

The feed pump (P-114) impeller diameter was decreased before the run to reduce the feed line pressure to well below the pressure developed by the feed line flush pump (P-116). With the feed valve closed and the recycle valve open, the pump delivered 10 psig line pressure compared to 60 psig before the impeller was cut down. P-116 developed 40 psig pressure on the feed line flush system. P-114 operated smoothly during the run.

Early in the run, the atomizing steam flow began to decrease and the steam pressure increased. The nozzle was removed and inspected. A scale deposit was found in the steam orifice of the nozzle. After a damaged steam line filter was replaced, the nozzle did not plug again. Although the liquid orifice of the feed nozzle did not plug, the feed temperature was cooled from 70 to 50 °C at 5 hr into the run.

A layer of powder and scale 1/8-1/2 in. thick was found on the calciner walls following the run. A coating of damp powder up to an inch thick accumulated in the cone beneath the nozzle. The deposits were formed by poor feed atomization. Most of the deposits formed after the scale was cleaned out of the nozzle steam orifice. From this evidence and the experience of previous runs, it was concluded that steam atomization is inferior to air atomization.

The run was stopped when the pressure drop across the calciner filters rose rapidly to 17 in. H_2O. Intermittent blowback with gas pressures up to 50 psig did not permanently stop the increase in pressure drop. The filters were coated with 1/4 in. of powder. The filter plugging was caused by damp powder accumulation from poorly atomized feed.

The new WSEP platinum melter, heated to 900 °C, was used for the first time. All the material below the main supporting flange of the original WSEP melter was replaced with pure platinum formed to the same design as the old melter. The portion above the flange was welded to the new bottom section. Melt was discharged without spattering from the weir, but the flow was usually an intermittent stream rather than dropwise flow. Flow rate usually increased during filter blowback pulses. At the end of the run, the melter was drained through the freeze valve.

The solids feeder plugged twice and had to be disconnected and cleaned. Insufficient cooling at the feeder connection to the melter nozzle allow the sodium metaphosphate chips to melt forming a bridge over the feeder outlet. In addition, chips clogged the connection pipe below the vibrating trough feeder. An air vibrator was attached to the connection pipe, but it didn't prevent further plugging. After the feeder clogged the second time, the chips were manually dumped into the melter at 30 min intervals using one of the cell manipulators.

The pulse reflectometer did not operate correctly and was removed from the melter early in the run. The alumina spacers insulating the center tube from the outer tube were dissolved by the melt. As a result, the center tube of the probe was bent over in contact with the outer tube thus giving a false (high) liquid level reading on the oscilloscope.

Melt samples were taken by removing the sample chamber window and inserting a sample cup into the melt stream emitting from the weir. This method was somewhat easier to perform remotely than by using the built-in sampler, since the sampler rod was more difficult to insert with a manipulator. The rod holding the viewing mirror in the sample chamber bent when it was inserted remotely, and the mirror could not be moved afterward. The air purge on the mirror face seemed to promote dirt formation rather than sweep off the mirror.

Thirty liters (85 kg) of black crystalline melt were collected in the 8 in. diameter 304-L SS pot heated to 650 °C. No stalagmites formed in the pot although there were small deposits on the upper and lower bends of the pot thermowell. The pot was not measurably corroded, verifying the results of a corrosion test made in the cell hood before the run. In this test, the corrosion rate on a 304-L SS coupon with the melt at 750 °C was negligible over a 24 hr period.

Greater than 99% of the feed sulfate was found in the melt and calciner powder deposits.

Solidifier condensate was collected and continuously concentrated in TK-113. The tank volume was maintained at about 150 liters and the bottoms and overhead acidities were 3 and 0.2M, respectively. About 2/3 of the ruthenium located was collected in TK-113, while the other third was found in the product. In all, 71% of the feed ruthenium was recovered by chemical analysis. The rest was not found and may have plated on the surfaces of the off-gas lines. Evaluation of the merit of using sugar solution for ruthenium retention in the evaporator was inconclusive since the sugar was run for only the last 43 min of the run. The sugar solution, 0.085M, was added to TK-113 at a rate of 1.5 liters/hr. Nitric acid was recovered in the acid fractionator (TK-115). Fractionator bottoms were maintained at 6M.

Prior to feed startup, the spray solidifier was run with water and atomizing air to see whether the vent capacity was large enough to allow air atomization of feed. Extrapolation of the data obtained indicated that air atomization could be used with a feed rate of 15 liters/hr if the spray solidifier system air in-leakage did not exceed 5 scfm with a calciner filter pressure drop of 12 inches of water.

Following the run, unsuccessful attempts were made to clean the calciner and the filters by extended operation of the vibrator and the filter blowback, respectively. Blowback air pressure up to 100 psig failed to remove an appreciable amount of the caked powder from the filters. After this, two experiments were conducted to test remote "wet" cleaning of the deposits from the filters and internal walls. Water sparge through an internally-mounted pipe in the filter chamber failed to clean the filters adequately. The filters were subsequently removed and cleaned by soaking them in cold 3M nitric acid for 16 hr in the cell decontamination tank. Attempts at thermal shock-cleaning the hot (675 °C) calciner walls with water were not successful. The nozzle used to spray the walls could not provide sufficient flow to shock the powder from the walls. A nozzle with double this capacity (16 liters/min) had performed successfully in previous tests in the developmental spray solidifier.[24] After the first WSEP spray solidifier demonstration run, calcine deposits were removed remotely from the internal calciner walls by washing the walls for about 24 hr with a moveable tank-cleaning nozzle. The filters were washed clean by blowing back with unheated steam and nitric acid.

REFERENCES

1. E.J. Tuthill, G.G. Weth, L.C. Emma, G. Strickland, and L.P. Hatch. "Brookhaven National Laboratory Process for the Continuous Conversion of High-Level Radioactive Waste to Phosphate Glass," Proceedings of the Symposium on the Solidification and Long-Term Storage of Highly Radioactive Wastes, February 14-18, 1966, Richland, Washington, W.H. Regan, Editor. CONF-660208, pp. 139-167. November, 1966.

2. J.M. Holmes, R.E. Blanco, J.O. Blomeke, W.E. Clark, H.W. Godbee, C.W. Hancher, J.C. Suddath, and M.E. Whatley. "Pot-Calcination Process for Converting Highly Radioactive Wastes to Solids," Treatment and Storage of High-Level Radioactive Wastes, Vienna, October 8-13, 1962. STI/PUV/63, pp. 255-286. International Atomic Energy Agency, Vienna, Austria, 1963.

3. D.L. Scott, M.E. Spaeth, K.J. Schneider. Unpublished Data. Battelle-Northwest, Richland, Washington, November, 1968. (Preliminary Report; Waste Solidification Engineering Prototypes, Design Verification Testing of the Phosphate Glass Process).

4. J.L. McElroy. Unpublished Data. Battelle-Northwest, Richland, Washington, May 1966. (Preliminary Report; Waste Solidification Engineering Prototypes, Design Verification Testing of the Pot Calcination and Rising Level Glass).

5. K.J. Schneider and V.P. Kelly. Waste Solidification Program, Volume II, Design Features of the Waste Solidification Engineering Prototypes. BNWL-968. Battelle-Northwest, Richland, Washington, February, 1969.

6. A.L.Allen, H.A. Bernhardt, S. Bernstein, R.H. Harrison, and E. W. Powell. Spray Decomposition of Uranyl Nitrate Solutions to Uranium Trioxide, K-444. Oak Ridge National Laboratory , July 1949.

7. W.H. Gauvin. Application of Atomized Suspension Technique to the Treatment of Sanitary Sludges. Tech Report 109. Pulp and Paper Research Institute of Canada, Montreal, Canada, November 1958.

8. R.T. Allemann and B.M. Johnson, Jr. Radiant-Heat Spray-Calcination Process for the Solid Fixation of Radioactive Waste, Part I - Non-radioactive Pilot Unit. HW-65806-Pt. 1. Available from Clearinghouse for Federal Scientific and Technical Information, Springfield, Virginia, February 1961.

9. John D. Kaser and James D. Moore. "The Development of a Spray Calciner-Melter," Proceedings of the Symposium on the Solidification and Long-Term Storage of Highly Radioactive Wastes, February 14-18, 1966, Richland, Washington. W.H. Regan, Editor. CONF-660208. pp. 326-374. November 1966.

10. R.T. Allemann, F.P. Roberts, and U.L. Upson. Solidification of High-Level Radioactive Fuel Reprocessing Wastes by Spray and Pot Calcination - Hot-Cell Pilot Plant Studies. HW-83896. Available from Clearinghouse for Federal Scientific and Technical Information, Springfield, Virginia, September 1964.

11. John D. Kaser and James D. Moore. "The Development of a Spray Calciner-Melter," Proceedings of the Symposium on the Solidification and Long-Term Storage of Highly Radioactive Wastes, February 14-18, 1966, Richland, Washington. W.H. Regan, Editor. CONF-660208. pp. 350-351. November 1966.

12. J.E. Mendel. "Properties of Melts in the PW-1:Na_2O:P_2O_5 System," Quarterly Progress Report, Research and Development Activities, Fixation of Radioactive Residues, January-March, 1966. A.M. Platt, Editor. BNWL-267, pp. 5-7. Battelle-Northwest, Richland, Washington, May 1966.

13. J. E. Mendel. "Waste Melt Composition Studies," Quarterly Progress Report, Research and Development Activities, Fixation of Radioactive Residues, April-June, 1966. A.M. Platt, Editor. BNWL-306, p. 3. Battelle-Northwest, Richland, Washington, August 1966.

14. J.E. Mendel. Unpublished Data. Battelle-Northwest Richland, Washington, 1966. (Preliminary Report).

15. J. E. Mendel. "Waste Melt Composition Studies," Quarterly Progress Report, Research and Development Activities, Fixation of Radioactive Residues, April-June, 1966. A.M. Platt Editor. BNWL-306, pp.3-4. Battelle-Northwest, Richland, Washington, August 1966.

16. John D. Kaser and James D. Moore. "The Development of a Spray Calciner-Melter," Proceedings of the Symposium on the Solidification and Long-Term Storage of Highly Radioactive Wastes, February 14-18, 1966, Richland, Washington. W.H. Regan, Editor. CONF-660208. p. 351. November 1966.

17. J. E. Mendel. "Waste Melt Composition Studies," Quarterly Progress Report, Research and Development Activities, Fixation of Radioactive Residues, April-June, 1966. A.M. Platt, Editor. BNWL-306, pp. 5-7. Battelle-Northwest, Richland, Washington, August 1966.

18. J. E. Mendel. "Waste Melt Composition Studies," Quarterly Progress Report, Research and Development Activities, Fixation of Radioactive Residues, April-June, 1966. A.M. Platt, Editor. BNWL-306, pp. 4-5. Battelle-Northwest, Richland, Washington, August 1966.

19. B.E. Paige. Leachability of Glass Prepared from Highly Radioactive Calcined Alumina Waste. IDO-14672. Phillips Petroleum Company, Idaho Falls, Idaho, February 1, 1966.

20. J. E. Mendel. "Solid Product Evaluations - Leach Tests," Quarterly Progress Report, Research and Development Activities, Fixation of Radioactive Residues, July-September, 1966. A.M. Platt, Editor. BNWL-365, pp.6-7. Battelle-Northwest, Richland, Washington, March 1967.

21. J. H. Kleinpeter. Unpublished Data. Battelle-Northwest, Richland, Washington, 1966. (Laboratory Record Book BNW-25).

22. B. E. Dozer. Unpublished Data. Battelle-Northwest, Richland, Washington, August 20, 1965. (Preliminary Report; Self-Calibrating Liquid Level Measuring Device for Severe Environments).

23. R. F. Maness. "Platinum Melter Corrosion," Quarterly Progress Report, Research and Development Activities, Fixation of Radioactive Residues, October-December 1966. A.M. Platt, Editor. BNWL-410, pp. 7-10, Battelle-Northwest, Richland, Washington, April 1967.

24. John D. Kaser and James D. Moore. "The Development of a Spray Calciner-Melter," Proceedings of the Symposium on the Solidification and Long-Term Storage of Highly Radioactive Wastes, February 14-18, 1966, Richland, Washington. W. H. Regan, Editor. CONF-660208. p. 341. November 1966.

ACKNOWLEDGEMENTS

The spray solidifier DVT's were carried out by members of the Waste Solidification Engineering Demonstration Operation under the management of C.R. Cooley. Engineers directing the tests were K.J. Schneider, J.L. McElroy, F.L. Mourich, and J.D. Moore. Supporting laboratory work was contributed by J.E. Mendel, J.H. Kleinpeter, and L.F. Lust. Valuable operating support was obtained from many technicians and maintenance personnel.

DISTRIBUTION

No. of Copies	
OFFSITE	
1	AEC Chicago Patent Group G. H. Lee
1	AEC Dayton Area Office P. O. Box 66 Miamisburg, Ohio, 45342 Ed Walker, Chief Operations Branch
1	AEC Division of Compliance R. B. Chitwood
229	AEC Division of Technical Information Extension
1	AEC Division of Materials Licensing 4915 St. Elmo Avenue Bethesda, Maryland 20014 John A. McBride
1	AEC Division of Naval Reactors R. S. Brodsky
1	AEC Division of Operational Safety Alex F. Perge
1	AEC Division of Production W. L. Lennemann
5	AEC Division of Reactor Development and Technology C. N. Bartlett W. G. Belter W. H. McVey A. J. Pressesky W. H. Regan
1	AEC Division of Space Nuclear Systems F. C. Schwenk
2	AEC Idaho Operations Office P. O. Box 2108 Idaho Falls, Idaho 83401 K. K. Kennedy B. L. Schmalz

No. of Copies	
1	AEC Oak Ridge Operations Office C. S. Shoup
1	Allied Chemical Corporation Nuclear Fuels Department P. O. Box 70 Morristown, New Jersey 07960 R. L. Newman
3	Argonne National Laboratory S. Lawroski J. Loeding R. C. Vogel
1	Argonne National Laboratory East Area EBR - 2 National Reactor Testing Station Scoville, Idaho P. Fineman
1	Atomic Energy Commission Minister of Defense Rehovoth, Israel Yehuda Feige
4	Atomic Energy of Canada Limited C. A. Mawson I. L. Ophel L. C. Watson J. Woolston
5	Atomic Energy Research Establishment Harwell, Didcot, Berks, England R. H. Burns H. J. Dunster W. H. Hardwick K. D. B. Johnson W. Wild
3	Australian Atomic Energy Commission Research Establishment Private Mail Bag Sutherland, New South Wales, Australia M. G. Bailie, Chemical Engineering Section R. C. P. Cairns L. Keher

No. of Copies	
3	Brookhaven National Laboratory L. P. Hatch E. J. Tuthill (2)
5	Center for Nuclear Studies P. O. Box 6, Fontenay-aux-Roses (Seine), France R. Bonniaud F. Laude J. Pomerola P. J. Regnaut J. Sauteron
1	Center for Nuclear Studies P. O. Box 269 Grenoble (Isere), France M. G. Wormser, Chemistry Division
3	Center for Nuclear Studies P. O. Box 2, Saclay Gif-sur-Yvette (Seine-et-Oise), France C. Gailledreau A. Menoux Andre J. Raggenbass
2	Center for Study of Nuclear Energy (C.E.N.) Mol, Belgium L. Baetsle P. Dejonghe
1	Commissaire Boite Postale No. 149 Paris (15 3m3), France F. Dumahel
1	Comitato Nazionale per l'Euergia Nucleare Divisione di Protezione Sauitaria e Controlli Viale Regina Margherita 125 Roma, Italy Ferruecio Gera
1	Commissariat a L' Energie Atomique Cadarache, France P. E. Pottier

No. of Copies	
1	Dow Chemical Company (AEC) D. L. Ziegler
6	duPont Company, Aiken (AEC) R. M. Girdler C. H. Ice L. H. Meyer C. M. Patterson E. B. Sheldon D. S. Webster
1	duPont Company, Wilmington (AEC) J. R. Thayer
1	The E. F. MacDonald Company Touramerica Division New York, New York Fred Herber-Oettgen
1	EURATOM Cassella Postale No. 1 Ispra, Italy M. Lindner
1	EURATOM 53 Rue Belliard Brussels, Belgium Pierre Kruys
2	Eurochemic Library Mol, Belgium
1	European Nuclear Energy Agency 38 Boulevard Suchet Paris 16, France I. G. K. Williams, Deputy Director
1	General Electric Company Fuel Recovery Operation 283 Brokaw Road Santa Clara, Calif. 95050 R. G. Barnes
2	General Electric Company, Pleasanton, California W. H. Reas

No. of Copies	
1	General Electric Co. Morris, Illinois S. G. Smolen
1	George Washington University Washington, D. C. C. R. Naeser
1	Geotechnical Corporation Box 28277, Dallas, Texas D. W. B. Heroy
1	Grupo de Combusitbles Irradiados Junta de Energia Nucl. Div. de Mat, Civdat Univ. Madrid 3, Spain Federico de Lova Soria
1	Gulf General Atomic P. O. Box 608 San Diego, California 92112 J. J. Shefcik
1	Hahn-Meitner Institut 100 Glienicker Street 1 Berlin 39, Germany Hans W. Levi
1	Harvard University Cambridge, Massachusetts H. A. Thomas, Jr.
3	Idaho Nuclear Corporation J. A. Buckham C. M. Slansky B. R. Wheeler
1	Illinois State Geological Survey Division Urbana, Illinois J. C. Frye
3	India Atomic Energy Establishment Trombay Engineering Hall No. 5 Bombay 73, India Keshave Chandra Jitender D. Sehal K. T. Thomas

No. of Copies	
1	Jersey Enterprises, Inc. Joseph Building Richland, Washington L. B. Torobin
3	Johns Hopkins University 513 Ames Hall Baltimore, Md. 21218 J. Geyer W. A. Patrick A. Wolman
1	Kansas State Health Department Topeka, Kansas 66601 S. J. Reno
1	Karlsruhe Nuclear Research Center Decontamination Dept. 75 Karlsruhe Siemensallee 83, West Germany Helmut Krause
1	Karlsruhe Nuclear Research Center Waste Storage Dept. Leopoldshafen/Bd. Max-Plandk-Str. 12, West Germany H. F. Ramdohr
1	KFA Director of Waste Treatment Juelich, Germany S. Rottay
1	Lawrence Radiation Laboratory, Berkeley (AEC) Technical Information Division Library
1	Lawrence Radiation Laboratory, Livermore (AEC) Technical Information Division Library
1	Los Alamos Scientific Laboratory (AEC) C. W. Christenson
1	Mining Academy Clausthal Petrology, Minerology & Economics Geology, Dept. Siemensalle, West Germany H. F. A. Borchert

No. of Copies	
1	Minister of Federal Property Const. Dept Bad Godesberg, West Germany G. M. K. Klinke
2	Mound Laboratory (AEC) S. Freeman J. J. Goldin
1	MPR Associates, Inc. 815 Connecticut Avenue, N. W. Washington, D.C. 20006 Theodore Rockwell, III, Chairman, AIF Safety Task Force
1	National Lead Company 111 Broadway New York, New York 10006 Stephen Brown
1	National Research Council 2101 Constitution Avenue Washington, D.C. 20418 Dr. Cyrus Klingsberg Tech. Secretary National Academy of Scientists
1	N. Y. State Atomic & Space Development Authority 230 Park Ave. New York, N. Y. O. Townsend, Director
1	William A. Nixon 656 South Illinois Street Arlington, Virginia 22204
2	Nuclear Fuel Services, Inc. P. O. Box 124 West Valley, N. Y. 14171 J. P. Duckworth W. G. Urban
1	Nuclear Materials and Equipment Corporation (AEC) Nuclear Design and Development M. Selman, Manager

No. of Copies	
1	Nuclear Safety Associates 1055-R-Rockville Pike Rockville, Md. 20852 W. A. Rodger
1	Nuclear Reactor Des. Sect. Nuclear Power Plant Dept. Hitachi, Ltd., Hitachi Works Hitachi-Shi Ibaraki-Ken, Japan A. Shimozato
4	Oak Ridge National Laboratory (AEC) Central Research Library, Document Reference Sect. Central Research Library, ORNL Laboratory Records Dept., ORNL Laboratory Records Dept., ORNL-RC
1	Phillips Petroleum Company Water Reactor Safety Program Off. P. O. Box 2067 Idaho Falls, Idaho 83401 W. Lyle Slagle
1	Plutonium Extraction Plant Marcoule, France C. J. Jouannaud
1	Princeton University Princeton, New Jersey 08540 H. H. Hess
2	Radiation Protection Dept. Luisenstrasse 46, Bad Godesberg, West Germany H. M. Holtzem G. Straimer
1	Tokai Refinery At. Fuel Corp. Tokai-Mura Ibraki-Ken, Japan M. Ichikawa

No. of Copies	
8	Union Carbide Corporation (ORNL) P. S. Baker R. E. Blanco J. O. Blomeke W. C. Clark F. M. Empson H. B. Godbee J. C. Suddath M. E. Whatley
1	University of Arizona Tucson, Arizona E. S. Simpson, Professor of Geology
1	University of Minnesota Environmental Health Research and Training Center Room 1108, Mayo Building School of Public Health Minneapolis, Minnesota 55455 C. P. Straub
1	University of North Carolina Chapel Hill, North Carolina H. C. Thomas
1	University of Texas Austin, Texas 78712 E. R. Gloyna
1	University of Wisconsin Madison, Wisconsin 53715 H. Gladys Swope
2	U. S. Bureau of Mines Washington, D.C. J. E. Crawford J. W. Watkins
1	U. S. Geological Survey Washington, D. C. R. L. Nace
1	U. S. Public Health Service Winchester, Massachusetts D. Moeller

No. of Copies	
1	USDA National Agricultural Library Current Serial Record (G) Washington, D. C. 20250
1	Vanderbilt University Nashville, Tennessee P. A. Krenkel

ONSITE-HANFORD

1	AEC Chicago Patent Group R. K. Sharp (Richland)
6	AEC Richland Operations Office J. T. Christy O. J. Elgert (2) J. E. Goodwin C. L. Robinson W. E. Lotz
2	AEC RDT Site Rep., Richland P. G. Holsted A. D. Toth
2	Atlantic Richfield Company P. O. Box 370 Richland, Washington 99352 H. C. Rathvon L. L. Zahn
15	Atlantic Richfield Hanford Company M. H. Campbell J. B. Fecht W. M. Harty R. E. Isaacson H. H. Hopkins L. M. Knights W. P. McCue R. W. McCullough G. C. Oberg H. P. Shaw P. W. Smith R. E. Smith R. E. Tomlinson J. H. Warren File Copy

No. of Copies	
3	Battelle Memorial Institute
2	Douglas United Nuclear, Inc. T. W. Ambrose DUN File
39	Battelle-Northwest G. J. Alkire J. M. Atwood A. G. Blasewitz (2) W. R. Bond R. E. Burns C. R. Cooley E. A. Coppinger D. R. de Halas G. M. Dalen V. L. Hammond J. N. Hartley J. D. Kaser J. H. Kleinpeter F. J. Leitz J. L. McElroy J. E. Mendel J. D. Moore (5) R. L. Moore F. L. Mourich P. C. Owzarski H. M. Parker A. M. Platt K. J. Schneider M. R. Schwab R. J. Thompson C. J. Touhill E. E. Voiland W. K. Winegardner Technical Information Files (5) Technical Publications (2)