UNC-5056

CARBIDE FUEL DEVELOPMENT PROGRESS REPORT

Period of
October 1, 1962 to March 31, 1963

Authors

United Nuclear

A. Strasser
D. Stahl

The Carborundum Company

K. Taylor
J. Anderson

May 1, 1963

Work Performed under UNC Project 2192,
Contract AT(30-1)-2899
with the United States Atomic Energy Commission

Prime Contractor
UNITED NUCLEAR CORPORATION
Development Division – NDA
White Plains, New York

Subcontractor
THE CARBORUNDUM COMPANY
Niagara Falls, New York

DISCLAIMER

This report was prepared as an account of work sponsored by an agency of the United States Government. Neither the United States Government nor any agency Thereof, nor any of their employees, makes any warranty, express or implied, or assumes any legal liability or responsibility for the accuracy, completeness, or usefulness of any information, apparatus, product, or process disclosed, or represents that its use would not infringe privately owned rights. Reference herein to any specific commercial product, process, or service by trade name, trademark, manufacturer, or otherwise does not necessarily constitute or imply its endorsement, recommendation, or favoring by the United States Government or any agency thereof. The views and opinions of authors expressed herein do not necessarily state or reflect those of the United States Government or any agency thereof.

DISCLAIMER

Portions of this document may be illegible in electronic image products. Images are produced from the best available original document.

FOREWORD

The Carbide Fuel Development project is sponsored by the USAEC Division of Reactor Development. The prime contractor is the United Nuclear Corporation, Development Division, and the subcontractor is The Carborundum Company. The United Nuclear Corporation is performing the conceptual design, fuel evaluation, and fuel irradiation. The Carborundum Company is fabricating the fuel. Both companies are operating plutonium handling facilities.

The report summarizes progress from October 1, 1962 to March 31, 1963.

Previous progress was reported in:

NDA 2140-2, Carbide Fuel Development – Phase I Report (Oct. 15, 1959)
NDA 2145-1, Carbide Fuel Development – Progress Report (Mar. 11, 1960)
NDA 2145-4, Carbide Fuel Development – Progress Report (June 13, 1960)
NDA 2145-5, Carbide Fuel Development – Progress Report (Aug. 30, 1960)
NDA 2145-6, Carbide Fuel Development – Phase II Report (Nov. 6, 1960)
NDA 2162-1, Carbide Fuel Development – Progress Report (Feb. 28, 1961)
NDA 2162-3, Carbide Fuel Development – Progress Report (June 1, 1961)
NDA 2162-5, Carbide Fuel Development – Phase III Report (Sept. 30, 1961)
UNC-5003, Carbide Fuel Development – Progress Report (Feb. 9, 1962)
UNC-5013, Carbide Fuel Development – Progress Report (May 28, 1962)
UNC-5030, Carbide Fuel Development – Progress Report (Aug. 10, 1962)
UNC-5055, Carbide Fuel Development – Phase IV Report (Mar. 31, 1963)

CONTENTS

1. INTRODUCTION 1

2. SUMMARY 3
   2.1 Fuel Fabrication and Evaluation 3
   2.2 Irradiation Tests 4

3. FUEL FABRICATION AND EVALUATION 5
   3.1 Powder Preparation 5
      3.1.1 Synthesis of $(U_{0.95}Pu_{0.05})C_{0.98}$ 5
      3.1.2 Synthesis of $(U_{0.8}Pu_{0.2})_2C_3$ 6
      3.1.3 Synthesis of Carbon-Stabilized PuO 7
   3.2 Sample Fabrication 8
      3.2.1 Fabrication of $(U_{0.95}Pu_{0.05})C_{0.98}$ Samples for Property Measurements 8
      3.2.2 Fabrication of $(U_{0.8}Pu_{0.2})_2C_3$ Pellets 14
   3.3 Vacuum Annealing Experiments 14
   3.4 Effect of Aging on Lattice Parameters 21
   3.5 X-Ray Mount Development 21
   3.6 Microprobe Analyses 22
   3.7 Fuel Clad Compatibility Tests 23
   3.8 Coefficient of Expansion Measurements 26
   3.9 Melting Point Determinations 30
   3.10 Vapor Pressure Measurements 31
   3.11 Performance Test of Equipment for Property Measurements 33

4. IRRADIATION TESTS 36
   4.1 Experiment Design and Assembly 36
   4.2 Experiment Operation 38

5. REPROCESSING OF IRRADIATED UC 42

TABLES

1. Synthesis of $(U_{0.95}Pu_{0.05})C_{0.98}$ Solid Solution 6
2. Synthesis of Carbon-Stabilized Plutonium Monoxide 7
3. Results of Sintering Experiments With $(U_{0.95}Pu_{0.05})C_{0.98}$ Pellets 9
4. Results of Sintering Experiments With $(U_{0.95}Pu_{0.05})C_{0.98}$ Bars 12
5. Results of Sintering Experiments With $(U_{0.8}Pu_{0.2})_2C_3$ 15
6. Effect of Vacuum Annealing on $(U_{0.8}Pu_{0.2})C_{0.95}$ Pellets Previously Sintered in Helium 18
7. Effect of Aging on Lattice Parameter of $(U_{0.95}Pu_{0.05})C_{0.98}$ 21
8. Results of X-Ray Analysis Experiment on UC + 0.1 w/o Ni 22
9. Compatibility Tests at 816°C (1500°F) 24
10. Compatibility Tests at 593°C (1100°F) 24
11. Coefficient of Expansion of Arc-Cast UC 27
12. Coefficient of Expansion of $(U_{0.95}Pu_{0.05})C_{0.95}$ 27
13. Coefficient of Expansion of $(U_{0.95}Pu_{0.05})C_{0.98}$ + 0.1 Ni 28
14. Summary of Carbide Thermal Expansion Coefficients 28
15. Melting Point Standards 30
16. Silver Vapor Pressure Test 34
17. Design Irradiation Conditions for $(U_{0.8}Pu_{0.2})C_{0.95}$ Specimens 37
18. Summary of Specimen Operating Conditions 41

FIGURES

1. Carbon Stabilized PuO 10
2. Typical Structure of $(U_{0.95}Pu_{0.05})C_{0.98}$ 13
3. Typical Structure of $(U_{0.95}Pu_{0.05})C_{0.98}$ plus 0.1% Ni 13
4. Solid Solution Sesquicarbide $(U_{0.8}Pu_{0.2})_2C_3$ 16
5. $(U_{0.8}Pu_{0.2})C_{0.95}$ plus 0.1% Ni – as Sintered in Helium at 1550°C, 1/2 hr 19
6. $(U_{0.8}Pu_{0.2})C_{0.95}$ plus 0.1% Ni – Sintered in Helium and Vacuum Annealed at 1900°C, 1 hr 19
7. $(U_{0.8}Pu_{0.2})C_{0.95}$ plus 0.1% Ni – Sintered in Helium and Vacuum Annealed at 2200°C, 1/2 hr 19
8. $(U_{0.8}Pu_{0.2})C_{0.95}$ – as Sintered in Helium at 1925°C, 1 hr 20
9. $(U_{0.8}Pu_{0.2})C_{0.95}$ – Sintered in Helium and Vacuum Annealed at 2200°C, 1/2 hr 20
10. Compatibility Capsule 25
11. Schematic of Dilatometer. 29
12. Schematic of Thermal Stability Experiment. 32
13. Instrument Consoles on Top of the GETR Measuring (UPu)C Specimen Operating Conditions 39

1. INTRODUCTION

The Carbide Fuel Development Program is concerned with the technology of the entire UC-PuC fuel cycle. The major goal of the program is to produce (UPu)C and to obtain data on its irradiation behavior for long burnups and at high power generation rates. In addition, other areas of the fuel cycle are being explored to discover potential problems.

Fuel made of a combination of UC and PuC has a potential of reducing the fuel cycle cost of existing fast breeder reactors. This is because of the increased burnup and increased power generation capability of (UPu)C compared to presently available metallic fuels. The effect of high burnup and high power generation rate on the stability of (UPu)C is not known. However, UC irradiation tests show that carbide fuels are dimensionally more stable than metallic fuels. Because of the high melting point and good thermal conductivity of UC and the formation of solid solutions of UC-PuC with high melting points, there is further expectation that carbide fuels will be capable of high power generation rates. The program was initiated in May 1959 and as originally outlined covers a period of about four and one-half years. Program objectives are outlined below.

Conceptual Design

1. An analytical study of the effect of substitution of UC-PuC on heat transfer, physics, and cost of existing fast breeder reactors.

2. Conceptual design of rod-type, fuel element configurations which can be substituted directly in existing reactors.

The above was completed and was reported in NDA 2140-2.

Facility Design and Fabrication

1. Design and construction of a facility for carbide fabrication at The Carborundum Company.
2. Design and construction of a facility for carbide evaluation at United Nuclear.

The above was completed and reported in NDA 2145-6.

Fuel Fabrication and Evaluation

1. Explore various methods for preparation of fuel from powders and fabrication of the fuel into cylindrical pellets. High density (up to 13.2 g/cm^3) UC and (UPu)C pellets have been made. The preparation of sesquicarbides and carbon stabilized monoxides is being studied.
2. Evaluate pellets by density measurement, chemical analysis, x-ray diffraction, metallography; perform fuel-cladding compatibility studies; measure physical constants. This is complete for UC and in process for (UPu)C. The (UPu)C melting point is being measured and the coefficient of expansion measurements are complete.

Fuel Irradiation

Irradiate clad fuel samples with burnup and maximum fuel temperature as the major variables. A minimum 2% burnup of all fuel atoms by fission and a minimum 650°C (1200°F) central fuel temperature were selected to establish the economic advantages of the fuel.

The UC samples have been irradiated and examined (NDA 2162-5, UNC-5055). The (UPu)C samples are being irradiated.

2. SUMMARY

2.1 FUEL FABRICATION AND EVALUATION

The synthesis and fabrication of $(U_{0.95}Pu_{0.05})C_{0.98}$ test specimens by cold pressing and sintering for out-of-pile property measurements were completed. Theoretical densities of 91% (avg) were obtained without sintering aid and 96% (avg) with 0.1 w/o nickel sintering aid.

Mixed sesquicarbide, $(U_{0.8}Pu_{0.2})_2C_3$, was synthesized and fabricated into pellets 94% of theoretical density.

Massive, carbon-stabilized PuO was synthesized by the carbon reduction of the dioxide. The carbon content of the product was 0.14 w/o.

The coefficients of expansion of $(U_{0.95}Pu_{0.05})C_{0.98}$ with and without nickel sintering aid were measured to 1400°C, and found to be 12.2 to $12.6 \times 10^{-6}/°C$ at that temperature.

Measurements of melting point and vapor pressure of mixed monocarbides were started by testing standards.

Compatibility tests at 593 and 816°C were started. Examination of results to date show a reaction between $(U_{0.95}Pu_{0.05})C_{0.98}$ and Zircaloy-2, and no reaction with type 316 SS and niobium after 1000 hr at 816°C. This is similar to previous results with UC.

2.2 IRRADIATION TESTS

The assembly of all the irradiation capsules was completed. Ten of the 12 planned specimens of $(U_{0.8}Pu_{0.2})C_{0.95}$ are currently operating in the GETR. The longest burnup obtained to date is 13,000 MW-d/tonne (avg).

3. FUEL FABRICATION AND EVALUATION

3.1 POWDER PREPARATION

3.1.1 Synthesis of $(U_{0.95}Pu_{0.05})C_{0.98}$

The current program is evaluating the out-of-pile properties of mixed uranium-plutonium carbides at the 5% Pu level. A total of about 400 g of $(U_{0.95}Pu_{0.05})C_{0.98}$ powder was synthesized for the fabrication of test specimens.

Fifty-gram reaction mixes of PuO_2, UO_2, and carbon were blended, cold-pressed without binder at about 5000 psi (pieces about 0.2 in. in diameter), and heated in helium to 1625°C with a hold time of 5½ hr. The reaction end-point was determined by monitoring the exhaust gas, drawn from the heated furnace, for CO. The results of analyses for total carbon and x-ray diffraction, as determined on the pulverized reaction products, are shown in Table 1.

The carbide powders, resulting from the eight synthesis experiments, were combined and subsequently ball-milled for 24 hr in a rubber-lined mill using stainless steel balls. X-ray diffraction of the composite showed single-phase (UPu)C with a unit cell size, $a_0 = 4.959 \pm 0.001$ Å. The results of analysis for total carbon gave 4.79%. The intended carbon content was 4.70%.

Table 1 — Synthesis of $(U_{0.95}Pu_{0.05})C_{0.98}$ Solid Solution

(1625°C – 5½ hr Hold Time – Normal U)

Experiment No	Total Carbon, %	Results of X-Ray Analysis
1	4.94	Single-phase (UPu)C, $a_0 = 4.9610 \pm 0.0003$ Å
2	4.88	
3	4.74	
4	4.66	Single phase (UPu)C, $a_0 = 4.9618 \pm 0.0003$ Å
5	4.78	
6	4.76	
7	4.73	
8	4.79	

3.1.2 Synthesis of $(U_{0.8}Pu_{0.2})_2C_3$

The sesquicarbides may have potential advantages over the monocarbides. Preliminary experiments were started to obtain some information on the fabrication technology and properties of the compound.

Two experiments were performed to synthesize $(U_{0.8}Pu_{0.2})_2C_3$. Stoichiometric proportions of PuO_2, UO_2, and carbon were blended and cold compacted, without binder, at 30,000 psi. These reaction pellets were about 0.2 in. in diameter and weighed about 1 gram each. The reaction pellets were heated to 1650°C with a hold time of four hours. Four grams of material were reacted in the first experiment and 25 g in the second. Chemical analyses on the pulverized products gave total carbon at 6.98% and 6.95%, respectively, for the two experiments. The theoretical carbon content is 7.02%. The results of x-ray analyses, taken on a representative sample from the 4-gram synthesis, showed a major $(UPu)_2C_3$ phase, a faint UC type structure, and a faint phase which could not be identified. The unit cell size for the sesquicarbide phase was $a_0 = 8.108 \pm 0.002$ Å. The ASTM index card gives $a_0 = 8.129$ for Pu_2C_3 and $a_0 = 8.088$ for U_2C_3.

3.1.3 Synthesis of Carbon-Stabilized PuO

The monoxides should have better corrosion resistance and a thermal conductivity equivalent to that of the monocarbides. Attempts by other investigators to make massive UO have been unsuccessful, but the ability of carbon to stabilize UO has been established. The preparation of massive PuO, on the other hand, has been reported by Harwell and Hanford.

The ultimate goal of this study is to determine whether $(U_{0.8}Pu_{0.2})O$ can be made. The apparent stability of PuO and the ability of small amounts of carbon to stabilize monoxides gives hope that the mixed monoxide is stable.

Initial experiments to synthesize PuO utilized the carbon reduction of PuO_2. Carbon and PuO_2 were combined in stoichiometric proportions to form PuO, then blended and pressed without a binder into 0.2 in. diameter pellets at 30,000 psi. The pellets were reacted in the helium atmosphere furnace at various temperatures. The exhaust gas, drawn from the heated furnace, was monitored periodically for CO to determine the reaction end-point. The reacted products were crushed in the Spex mixer and chemical analyses were made. Results are shown in Table 2.

Table 2 — Synthesis of Carbon-Stabilized Plutonium Monoxide

Experiment No.	Synthesis Temp, °C	Time, hr	Total Carbon %	Results of X-Ray Analysis	Comment
1	1750	5½	0.17	Several UC type phases (PuC, PuO, PuN)	Cored
2	1750	6	0.15	Single-phase UC type structure	Cored

Lattice parameters could not be determined because of weak film intensity and the poor resolution.

As shown in Fig. 1, metallographic examination of the synthesized clinker showed a two-phase structure, a major gray phase (probably PuO with some carbon impurity), and a white phase (probably α Pu_2O_3). The structure was unaffected by the normal carbide etch (nitric-acetic acids), and was slightly affected by the normal oxide etch (nitric-hydrofluoric).

An initial experiment at 1800°C on a tantalum setter resulted in a fused pellet stuck to the tantalum. The reason for the fusion is not known; it may have been either an indication of the PuO melting point, or the result of the PuO_2-Ta reaction. Tantalum and tungsten setters were compared in the 1750°C experiments described in Table 2. Either of the metals was satisfactory at 1750°C, however, less sticking was encountered with tungsten.

3.2 SAMPLE FABRICATION

3.2.1 Fabrication of $(U_{0.95}Pu_{0.05})C_{0.98}$ Samples for Property Measurements

The $(U_{0.95}Pu_{0.05})C_{0.98}$ powder described in Table 1 was used to fabricate pellets for melting point, vapor pressure, and compatibility specimens, and to fabricate bars for thermal coefficient of expansion measurements.

Seventy pellets were fabricated, of which 35 contained 0.1% nickel.

The size of the cold-pressed pellets was 0.224 in. in diameter by 0.215 in. high. These were mixed with 1/4% Carbowax 6000 binder and cold pressed at 30,000 psi. The pellets were preheated to about 700°C in an open tantalum crucible to volatilize the binder. The final sintering was completed in a closed tantalum crucible. Pellets without the nickel sintering aid were heated to 1925°C with a hold time of 1 hr; those containing the 0.12 w/o addition of nickel were sintered at 1550°C with a hold time of 1/2 hr. Results of these experiments are shown in Table 3.

Table 3 — Results of Sintering Experiments With $(U_{0.95}Pu_{0.05})C_{0.98}$ Pellets

[Pellet Density, g/cm^3 (10 Pellets)]

Experiment No.	Sintering Conditions	Intended Composition	Range	Average	Plutonium,* %	Total Carbon,† %	Nitrogen, ppm	X-Ray Analysis
1	1925°C, 1 hr	$(U_{0.95}Pu_{0.05})C_{0.98}$	12.24-13.37	12.31	4.9	4.67	273	Single-phase (UPu)C $a_0 = 4.9616 \pm 0.0003$ Å
2	1550°C, 1/2 hr	$(U_{0.95}Pu_{0.05})C_{0.98}$ plus 0.1 w/o Ni	12.93-13.15	13.04	4.6	4.79	144	Single-phase (UPu)C $a_0 = 4.961 \pm 0.001$ Å

*Intended plutonium content: 4.75%.
†Intended carbon content: 4.70%.

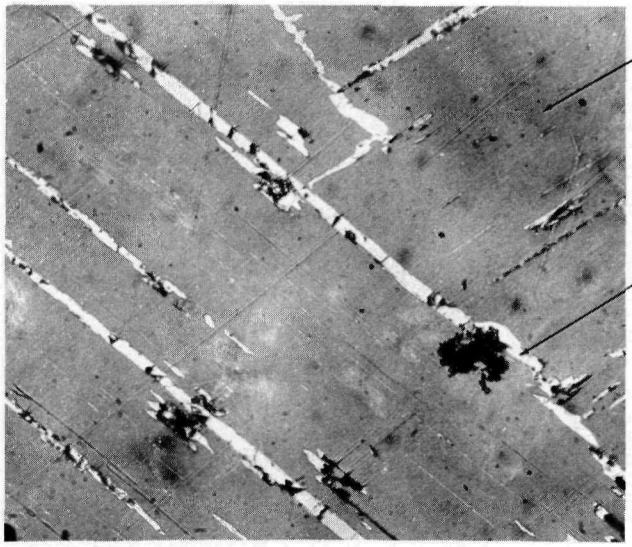

Fig. 1 — Carbon stabilized PuO. Made by synthesis of PuO_2 plus C at 1750°C, 6 hr. 600×. Unetched.

Metallographic examination of $(U_{0.95}Pu_{0.05})C_{0.98}$ (Figs. 2, 3) showed structures similar to those of $(U_{0.8}Pu_{0.2})C_{0.95}$. Material without sintering aid was essentially single-phase monocarbide with some Widmanstätten structure. Material with nickel sintering aid contained sesquicarbide in the monocarbide matrix.

Eight $(U_{0.95}Pu_{0.05})C_{0.98}$ coefficient of expansion bars were fabricated, four with nickel sintering aid and four without.

Problems involving warpage and breakage of the bars during the sintering operation were anticipated. To conserve the limited supply of $(U_{0.95}Pu_{0.05})C_{0.98}$ powder, several exploratory sintering experiments were conducted with UC. The results of these experiments indicated that the specimens were too fragile to handle after the usual presintering step at 700°C. This step is normally carried out in an open tantalum crucible to volatilize the binder, and the final sinter is then completed in a closed tantalum crucible. To minimize warpage in the bars without the nickel addition, it was necessary to presinter at 1550°C to provide sufficient strength for handling, and to confine the bars closely in a tantalum-lined graphite crucible befor the final sintering at 1925°C.

The size of the cold-pressed bars was 2.230 in. long, 0.233 in. wide, and 0.340 in. high. These were cold pressed at 13,000 psi (maximum pressure attainable with the existing pressing equipment) and contained the usual 1/4 w/o Carbowax binder. The bars, with and without the nickel additions, subsequently were sintered for 1 hr at 1550 and 1925°C, respectively. The bars containing the nickel addition met size and camber specifications after the sintering operation, and grinding was unnecessary. However, those without the nickel addition were warped excessively.

Two of these bars were reheated to 1850°C with a hold time of 1/4 hr in an attempt to decrease the camber along the longitudinal and lateral axes. These bars were subsequently surface ground to size. Results of these experiments are shown in Table 4.

Table 4 — Results of Sintering Experiments With $(U_{0.95}Pu_{0.05})C_{0.98}$ Bars

(Bars for Thermal Expansion Studies)

Intended Composition	Sintering Temp, °C	Hold Time, hr	Bar Density, g/cm^3 (Two Bars)	Plutonium,* %	Total Carbon,† %	Nitrogen, ppm	X-Ray Analysis
$(U_{0.95}Pu_{0.05})C_{0.98}$	1925	1	11.80-11.81	4.6	4.67	251	Single-phase (UPu)C $a_0 = 4.9607 \pm 0.0003$ Å
$(U_{0.95}Pu_{0.05})C_{0.95}$ plus 0.12 w/o Ni	1550	1	13.17-13.29	5.1	4.77	272	Single-phase (UPu)C $a_0 = 4.962 \pm 0.001$ Å

*Intended plutonium content: 4.75%.
†Intended carbon content: 4.70%.

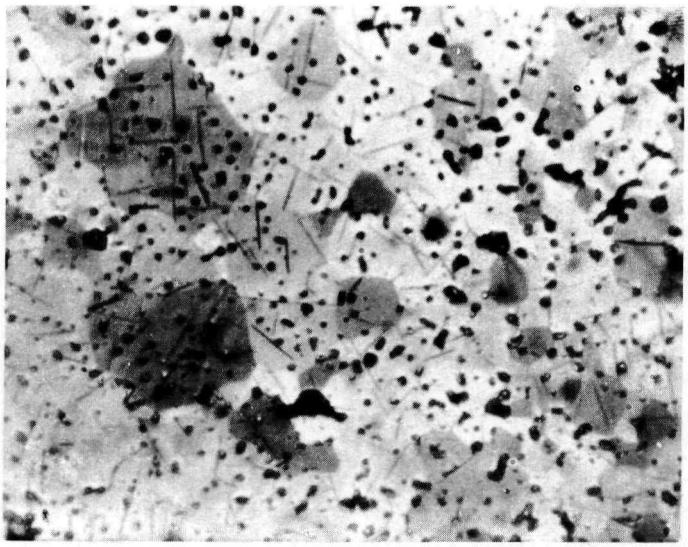

Fig. 2 — Typical structure of $(U_{0.95}Pu_{0.05})C_{0.98}$. 600×. Etchant: nitric acid-acetic acid-water.

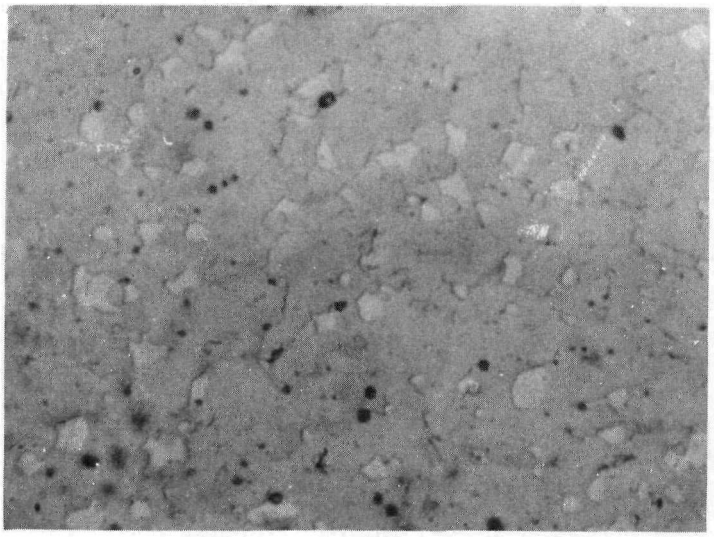

Fig. 3 — Typical structure of $(U_{0.95}Pu_{0.05})C_{0.98}$ plus 0.1% Ni. 600×. Etchant: nitric acid-acetic acid-water.

Metallographic examination showed structures similar to those shown in Figs. 2 and 3.

3.2.2 Fabrication of $(U_{0.8}Pu_{0.2})_2C_3$ Pellets

Several sintering experiments were performed with the 25 g batch of sesquicarbide powder described in Section 3.1.2. For this purpose, the pulverized product was milled for 24 hr in a rubber-lined mill using stainless steel balls.

Pellets for the initial sintering experiment were cold pressed without a binder. The resulting pellets were laminated badly after sintering. Pellets fabricated for subsequent sintering experiments were made with 1/4 w/o Carbowax binder and cold pressed in the usual manner at 30,000 psi. The pellets were 0.225 in. in diameter and about 0.2 in. long. Three experiments were carried out with these pellets. The sintering temperatures were 1650, 1700, and 1750°C with hold times of 1 hr. The results are shown in Table 5.

The cause for the shattering of the pellet during the 1750°C sintering is not known. Similar shattering has been reported for Pu_2C_3 by other investigators. The structure of the 1750°C sintered pellet is shown in Fig. 4.

3.3 VACUUM ANNEALING EXPERIMENTS

The effect of vacuum annealing on structure and composition of $(U_{0.8}Pu_{0.2})C_{0.95}$ is being studied with objectives of:

1. Reacting the residual oxygen (2000 to 4000 ppm) with the carbide. In addition to lowering the oxygen level, this could produce further densification by producing some free U and Pu which would act as a sintering aid, and then evaporate at the higher temperatures.
2. Evaporating the nickel sintering aid. Since the addition of nickel promotes the presence of the sesquicarbide phase, the removal of nickel may transform the material into a single-phase structure.

Table 5 — Results of Sintering Experiments With $(U_{0.8}Pu_{0.2})_2C_3$

Experiment No.	Sintering Temp, °C	Time, hr	Sintered Density*	Total Carbon†	X-Ray Analysis
1	1650	1	11.80-11.90 (11.83 avg)	6.84	Major $(UPu)_2C_3$ Faint (UPu)C
2	1700	1	11.95-12.05 (12.00 avg)	6.75	Major $(UPu)_2C_3$ Faint (UPu)C
3	1750	1	Pellet shattered	6.90	<u>Camera</u> Major $(UPu)_2C_3$ Faint (UPu)C $a_0 = 8.089 \pm 0.004$ Å <u>Diffractometer</u> Major $(UPu)_2C_3$ $a_0 = 8.08997 + 0.00009$ Å -0.00006 Å Moderate (UPu)C $a_0 = 4.959 \pm 0.002$ Å Weak/moderate $(UPu)C_2$

*Theoretical density for Pu_2C_3 is 12.7 g/cm^3 and 12.68 g/cm^3 for U_2C_3.
†Theoretical carbon content is 7.02%.

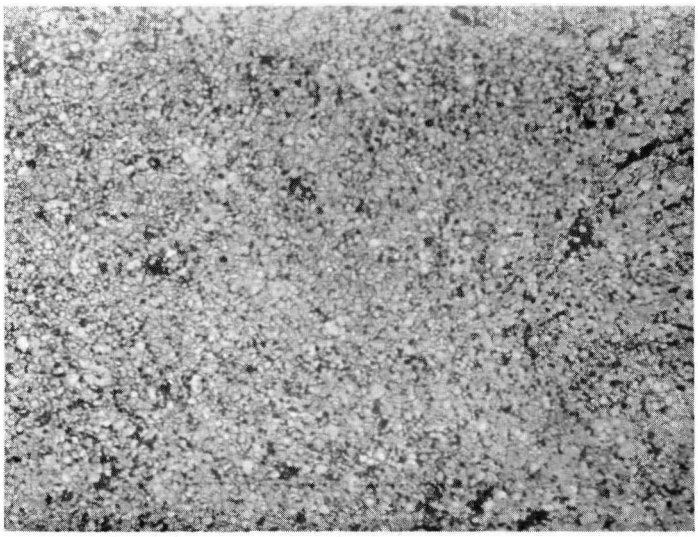

150×

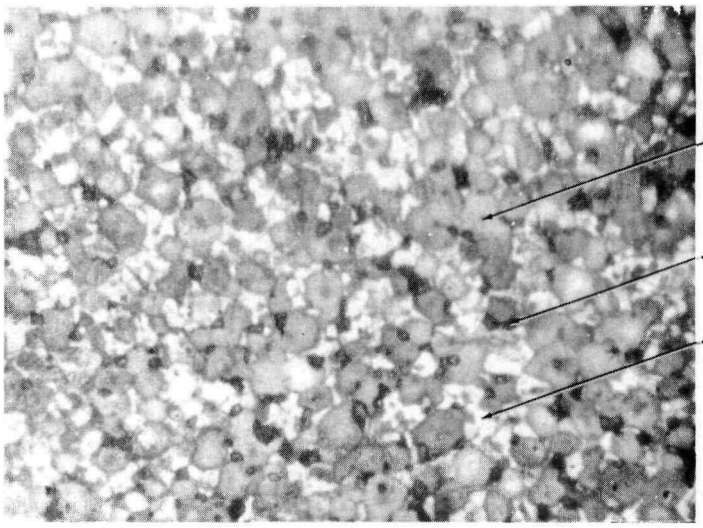

600×

Fig. 4 — Solid solution sesquicarbide $(U_{0.8}Pu_{0.2})_2C_3$. Pellet sintered at 1750°C, 1 hr. Etchant: nitric acid-lactic acid-water.

Preliminary experiments show that the two-phase material (made with nickel sintering aid) can be converted to single-phase material by high temperature vacuum annealing.

The initial vacuum heating cycles decided upon were 1900°C for 1 hr and 2200°C for 1/2 hr. To test objectives (1) and (2), materials without nickel and with 0.1 w/o nickel were run at the above conditions. The changes in dimensions, weights. and bulk densities are summarized in Table 6 together with the observed microstructural changes. The photomicrographs of the unannealed and annealed materials are shown in Figs. 5 through 9.

Fig. 5 shows the structure of a representative sample of $(U_{0.8}Pu_{0.2})C_{0.95}$ + 0.1 Ni before annealing. The white areas are the sesquicarbide phase. After a 1-hr anneal at 1900°C (Fig. 6), the sequicarbide phase has disappeared and a grain boundary metal phase has formed. Some dicarbide is also evident. When the as-sintered specimen is annealed at 2200°C for 1/2 hr (Fig. 7), a single-phase (UPu)C structure is obtained. The grain boundary metal phase has evaporated and the excess oxygen has apparently accumulated into bubbles, probably as CO, with a subsequent decrease in bulk density. The nickel content has been reduced substantially by the vacuum annealing treatment, from ~1200 to ~100 ppm. Longer hold times may be necessary to reduce the oxygen content as hypothesized above.

Fig. 8 shows the structure of $(U_{0.8}Pu_{0.2})C_{0.95}$ before annealing. No appreciable changes in structure, weight, measurements, or density were found after annealing at 1900°C. However, after the anneal to 2200°C (Fig. 9), the Widmanstätten structure (dicarbide) has disappeared and single-phase material is obtained. A slight density increase was obtained, perhaps indicating that some liquid-phase sintering had occurred as hypothesized in (1) above. The oxygen content was reduced by one-half in agreement with the hypothesis. However, further study is needed.

Table 6 — Effect of Vacuum Annealing on $(U_{0.8}Pu_{0.2})C_{0.95}$ Pellets Previously Sintered in Helium

Sintering Aid	Vacuum Treatment, (~10^{-4} mm Hg)	Weight Change, %	Diameter Change, in.	Bulk Density Change, %	Microstructure Change
0.1 w/o Ni	1900°C, 1 hr	-0.25	+0.0020	-3.2	Sesquicarbide phase gone. Metal grain boundary phase formed. Some "dicarbide" formed.
0.1 w/o Ni	2200°C, 1/2 hr	-1.1	-0.0033	-6.9	Single-phase material obtained. No evidence of grain boundary phase or "dicarbide" seen. Porosity is increased.
No Ni	1900°C, 1 hr	-0.09	+0.0001	-0.40	No significant change. "Dicarbide" phase still present.
No Ni	2200°C, 1/2 hr	-1.0	-0.0011	+0.77	"Dicarbide" phase gone. Single-phase material obtained.

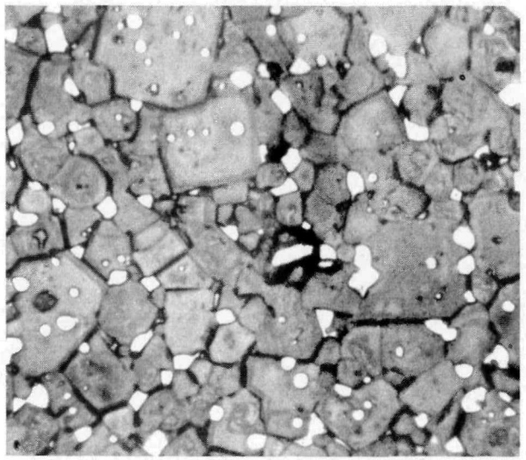

O: ~4000 ppm
Ni: ~1200 ppm
C: 4.6/4.7 w/o

Fig. 5 — $(U_{0.8}Pu_{0.2})C_{0.95}$ plus 0.1% Ni – as sintered in helium at 1550°C, 1/2 hr. 600×. Etchant: nitric acid-acetic acid-water.

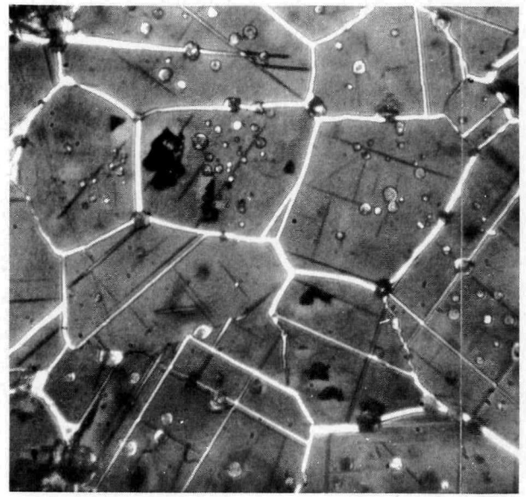

O: ~3600 ppm
Ni: ~140 ppm

Fig. 6 — $(U_{0.8}Pu_{0.2})C_{0.95}$ plus 0.1% Ni – sintered in helium and vacuum annealed at 1900°C, 1 hr. 600×. Etchant: nitric acid-acetic acid-water.

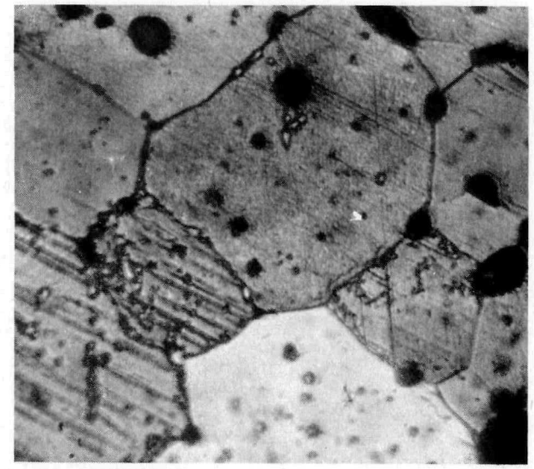

O: ~1600 ppm
Ni: ~100 ppm

Fig. 7 — $(U_{0.8}Pu_{0.2})C_{0.95}$ plus 0.1% Ni–sintered in helium and vacuum annealed at 2200°C, 1/2 hr. 600×. Etchant: nitric acid-acetic acid-water.

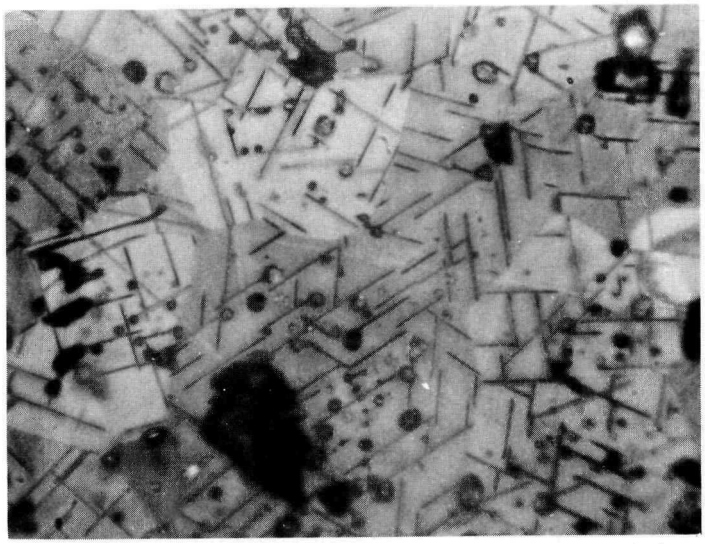

O: ~2000 ppm

Fig. 8 — $(U_{0.8}Pu_{0.2})C_{0.95}$ – as sintered in helium at 1925°C, 1 hr. 600×. Etchant: nitric acid-acetic acid-water.

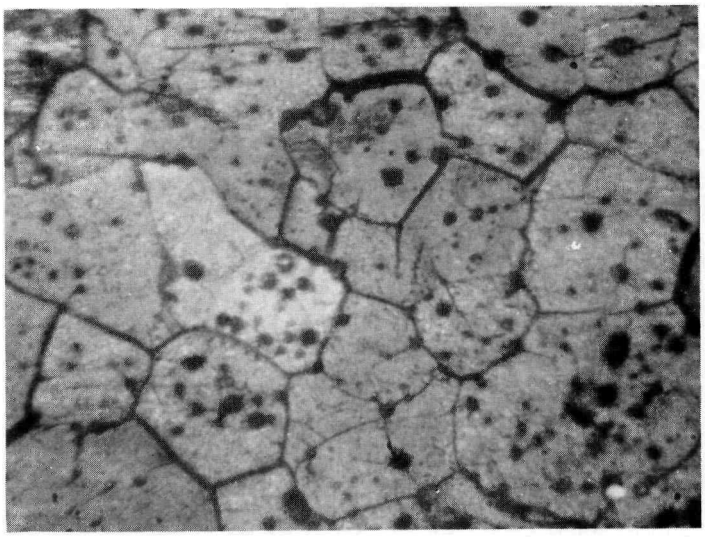

0: ~1000 ppm

Fig. 9 — $(U_{0.8}Pu_{0.2})C_{0.95}$ – sintered in helium and vacuum annealed at 2200°C, 1/2 hr. 600×. Etchant: nitric acid-acetic acid-water.

3.4 EFFECT OF AGING ON LATTICE PARAMETERS

Studies at Harwell have shown that the lattice parameter of plutonium compounds increases with time. Hanford has confirmed the effect. The reason for the parameter increase has been postulated as an alpha radiation effect, but this is not known.

A change in lattice parameter with time would be significant in the identification of plutonium compounds; therefore, in December 1962, a study was initiated to determine the effect on $(U_{0.95}Pu_{0.05})C_{0.98}$. The results to date are shown in Table 7. These experiments will be continued for several months to see if there is a definite trend.

Table 7 — Effect of Aging on Lattice Parameter of $(U_{0.95}Pu_{0.05})C_{0.98}$

Date	Phases Present	Unit Cell Size
Dec. 15, 1962	Single-phase (UPu)C	$a_0 = 4.9607 \pm 0.0003$ Å
Jan. 15, 1963	Single-phase (UPu)C	$a_0 = 4.9603 \pm 0.0004$ Å
Feb. 15, 1963	Single-phase (UPu)C	$a_0 = 4.9612 \pm 0.0005$ Å
Mar. 15, 1963	Single-phase (UPu)C	$a_0 = 4.9613 \pm 0.0009$ Å

3.5 X-RAY MOUNT DEVELOPMENT

X-ray analysis has been performed by monitoring a sample in a sealable camera which is then taken to an uncontrolled area and exposed to x-rays. This camera technique does not give sufficient sensitivity. The more sensitive x-ray diffraction methods normally require a large sample size. This increases the risk when the sample is taken to an uncontrolled area for exposure. Therefore, a small sample size capable of encapsulation in the alpha facility, and as sensitive to the method as the large sample, is required.

A new sample holder and a method for sample preparation were developed and evaluated. Identical samples were also analyzed by the camera technique, using a coated tungsten filament, and by the standard diffractometer method (packed powder), for comparison. The sample used for this study was a sintered UC plus 0.1 w/o nickel specimen which was pulverized and blended with tungsten (10 w/o). The tungsten served as an internal standard to aid in sample alignment and film shrinkage calculations.

The results of these experiments indicated the new method to be more sensitive than the camera technique used to date. It is equally as sensitive as the standard diffraction method, which requires larger samples. The results are shown in Table 8.

Table 8 — Results of X-Ray Analysis Experiment on UC + 0.1 w/o Ni

Experiment No.	Type of Holder	Method of Analysis	Results of X-Ray Analysis
1	Coated W filament (usual method)	Camera	Major UC, faint U_2C_3 $a_0 = 4.9593 \pm 0.0012$ Å
2	Newly developed (small sample size)	Diffractometer	Major UC, weak U_2C_3, faint UO_2 and UC_2 $a_0 = 4.9605 \pm 0.0003$ Å
3	Standard (large sample size)	Diffractometer	Same as above

3.6 MICROPROBE ANALYSES

Microprobe analyses are being continued to identify phases by chemical composition, and to determine the uniformity of distribution of plutonium and nickel. The analyses are being carried out by the Monsanto Research Corporation's Mound Laboratory on an ARL electron-beam microprobe x-ray analyzer.

Previous analyses of $(U_{0.8}Pu_{0.2})C_{0.95}$ + 0.1 Ni (see UNC-5055, Section 3.4.3) concluded that nickel was concentrated at the grain boundaries. Relative uranium and plutonium contents were obtained, but absolute contents could not be determined because of insufficient standards. The standards used to that date were uranium metal, UC, and nickel.

Arc-cast PuC and Pu_2C_3 were prepared by General Electric Company's Hanford Laboratories. Although each of the standards was a mixture of PuC and Pu_2C_3, the phases were large enough in area to be used as standards. Additional standards used were UC, UC + 0.1 Ni (which contains U_2C_3), and nickel.

Preliminary results to date on new samples of $(U_{0.8}Pu_{0.2})C_{0.95}$ and $(U_{0.8}Pu_{0.2})C_{0.95}$ + 0.1 Ni show: (1) The plutonium and nickel uniformity in the samples is better than the sensitivity of the instrument (with the possible exception of one indication, nickel is not concentrated at the grain boundaries); (2) the plutonium to uranium ratio in the "sesquicarbide" phase is higher than in the monocarbide phase; (3) the phase thought to be sesquicarbide may also be monocarbide, based on absolute U + Pu content analyses. (This would be contrary to previous conclusions reached by a combination of metallography, carbon analysis, and x-ray diffraction.)

3.7 FUEL CLAD COMPATIBILITY TESTS

The compatibility of $(U_{0.95}Pu_{0.05})C_{0.95}$ with the potential cladding materials shown in Tables 9 and 10 will be studied under conditions similar to those that would prevail in a fuel element. Fuel is held in contact with the cladding materials in capsules similar to the one shown in Fig. 10. Continued contact between fuel and cladding samples at elevated temperatures is assured since the stainless steel insert has a higher coefficient of thermal expansion than the Inconel container. Most capsules contain only one type of cladding material. The capsules are seal-welded in a glove box containing a helium atmosphere, decontaminated, leak checked, taken out of the glove box line and placed in the sealed inner shell of the furnace. The furnace itself stands in a hood in the plutonium facility.

Table 9 — Compatibility Tests at 816°C (1500°F)

		1000 hr	4000 hr
$(U_{0.95}Pu_{0.05})C_{0.98}$ vs	type 316 SS	X	X
	Nb, Nb-1% Zr	X	X
	Zircaloy-2	X	X
	2¼% Cr-1% Mo	-	X
$(U_{0.95}Pu_{0.05})C_{0.98}$ + 0.1 w/o Ni vs	type 316 SS	X	X
	Nb, Nb-1% Zr	-	X

Table 10 — Compatibility Tests at 593°C (1100°F)

		1000 hr	4000 hr
$(U_{0.95}Pu_{0.05})C_{0.98}$ vs	type 316 SS	-	X
	Nb, Nb-1% Zr	-	X
	Zircaloy-2	X	-
	2¼% Cr-1% Mo	-	X
$(U_{0.95}Pu_{0.05})C_{0.98}$ + 0.1 w/o Ni vs	type 316 SS	-	X
	Nb, Nb-1% Zr	-	X
	2¼% Cr-1% Mo	-	X

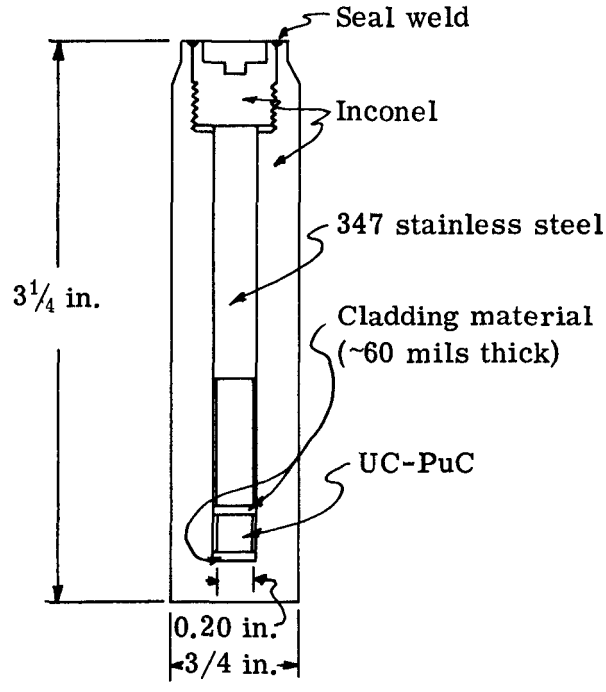

Fig. 10 — Compatibility capsule

After the test the samples are sectioned and examined metallographically. The 816°C (1500°F) test has operated for 2400 hr (4000 hr intended) and the 1000 hr specimens are being examined. The 593°C (1100°F) test specimens are assembled and the test is ready to start. A second furnace was set up for the lower temperature test, to cut down the overall calendar time for completion of all tests.

Metallographic examination of the 1000 hr, 816°C, tests to date shows no reaction between $(U_{0.95}Pu_{0.05})C_{0.98}$ and type 316 SS, Nb, and Nb-1% Zr. The same fuel was bonded to Zircaloy-2 indicating a reaction; the sample is being examined currently.

3.8 COEFFICIENT OF EXPANSION MEASUREMENTS

The coefficient of thermal expansion is determined with a differential dilatometer consisting of high purity, high density tubular alumina elements (Fig. 11). The difference in expansion between the alumina and the specimen is sensed by both a dial gage and a linear variable differential transformer. The dilatometer can be evacuated or operated with an inert atmosphere. To date, all measurements were made in vacuum. Temperature is measured and controlled with the use of W/W-26% Re thermocouples located adjacent to the specimen.

The thermal expansion of arc-cast uranium carbide was measured from room temperature to 1360°C. This material was chosen to provide experimental data checks of the dilatometer on a material with a coefficient of expansion likely to be similar to (UPu)C. The apparatus had been previously calibrated with a tantalum standard to 1485°C. The calculated data given in Table 11 are in fair agreement with the literature values.

Sintered bars of $(U_{0.95}Pu_{0.05})C_{0.98}$, with 0.1 w/o Ni and without Ni, were tested to 1400°C, and mean values of $12.2 \times 10^{-6}/°C$ and $12.6 \times 10^{-6}/°C$, respectively, were obtained. The accuracy of these values is about ±5%. Tables 12 and 13 give all the data obtained on the two heating runs and one cooling run for each specimen, in addition to the overall value. Dimensions of each specimen were taken accurately before and after testing and no appreciable changes were found. Metallography and chemical analysis have been performed on untested duplicate bars. Analyses will be performed on the tested bars at a later date.

The expansion data given in the tables are about 5% higher than the literature values given for UC at corresponding temperatures. These values are given in Table 14 together with the PuC and (UPu)C data available from the literature.

Table 11 — Coefficient of Expansion of Arc-Cast UC

Coefficient of Thermal Expansion, $10^{-6}/°C$

Temperature Range, °C	Transformer First Heating	Transformer Second Heating	Transformer First Cooling	Dial Gage First Heating	Dial Gage Second Heating	Dial Gage First Cooling	Dial Gage Third Heating	Overall Value	Crane (UNC)*
30-200	8.30	10.7	9.11	9.30	10.0	11.7	8.83	9.70	10.2
30-400	9.7	11.3	10.0	10.2	11.4	12.3	10.3	10.7	10.8
30-600	10.7	12.3	11.0	11.6	12.0	12.7	11.8	11.7	11.1
30-800	12.0	13.0	11.8	12.7	12.3	13.0	12.3	12.4	11.4
30-1000	12.9	13.4	12.2	13.6	12.6	13.3	12.8	12.8	11.6
30-1200	-	13.7	12.4	-	12.6	13.5	13.1	13.0	-
30-1360	-	13.8	12.6	-	12.7	13.7	-	13.2	-

*Preliminary data on similar material.

Table 12 — Coefficient of Expansion of $(U_{0.95}Pu_{0.05})C_{0.95}$

Thermal Expansion Coefficients, $10^{-6}/°C$

Temperature Range, °C	Transformer First Heating	Transformer First Cooling	Transformer Second Heating	Dial Gage First Heating	Dial Gage First Cooling	Dial Gage Second Heating	Overall Value (all runs)
25-200	9.42	8.58	8.29	8.68	9.70	9.43	9.0
25-400	10.4	10.4	9.20	9.75	10.7	10.0	10.0
25-600	11.1	11.5	10.3	10.6	11.7	10.8	10.8
25-800	11.7	12.1	11.2	11.4	12.4	11.6	11.6
25-1000	12.2	12.5	11.8	11.7	12.8	12.1	12.0
25-1200	12.7	12.7	12.2*	12.2	13.0	12.4*	12.4
25-1400	13.1	12.9	12.4	12.5	13.3	12.6	12.6

*Interpolated.

Table 13 — Coefficient of Expansion of $(U_{0.95}Pu_{0.05})C_{0.98}$ + 0.1 Ni

Thermal Expansion Coefficients, $10^{-6}/°C$

Temperature Range, °C	Transformer First Heating	Transformer First Cooling	Transformer Second Heating	Dial Gage First Heating	Dial Gage First Cooling	Dial Gage Second Heating	Overall Value (all runs)
25-200	8.58	7.55	8.87	9.15	9.71	8.30	8.60
25-400	10.9	8.75	9.86	10.2	10.7	9.20	10.2
25-600	11.7	9.73	10.8	10.8	11.7	10.1	10.9
25-800	12.0	10.7	11.3	11.4	12.3	10.8	11.4
25-1000	12.2	11.7	11.7	12.0	12.9	11.3	11.8
25-1200	12.2	12.4	11.9	12.1	13.4	11.6	12.1
25-1400	12.2	12.5	12.1	12.2	13.4	11.7	12.2

Table 14 — Summary of Carbide Thermal Expansion Coefficients, $10^{-6}/°C$

Material	Source	Temperature Range, °C	Coefficient
Sintered UC	Taylor (Carborundum)	25-900	11.1
Cast UC	Secrest (BMI)	25-950	11.4
Sintered PuC	Pallmer (HW)	25-900	10.8
PuC	Kruger (ANL	25-400	10.6
Cast $PuC_{0.85}$	Ogard (LA)	25-900	11.0
Cast $(U_{0.87}Pu_{0.13})C$	Ogard (LA)	25-900	11.1
Sintered $(U_{0.8}Pu_{0.2})C_{0.95}$	Stahl (UNC)	25-900	11.8
		25-1400	12.6
Sintered $(U_{0.8}Pu_{0.2})C_{0.95}$ + 0.1 Ni	Stahl (UNC)	25-900	11.6
		25-1400	12.2

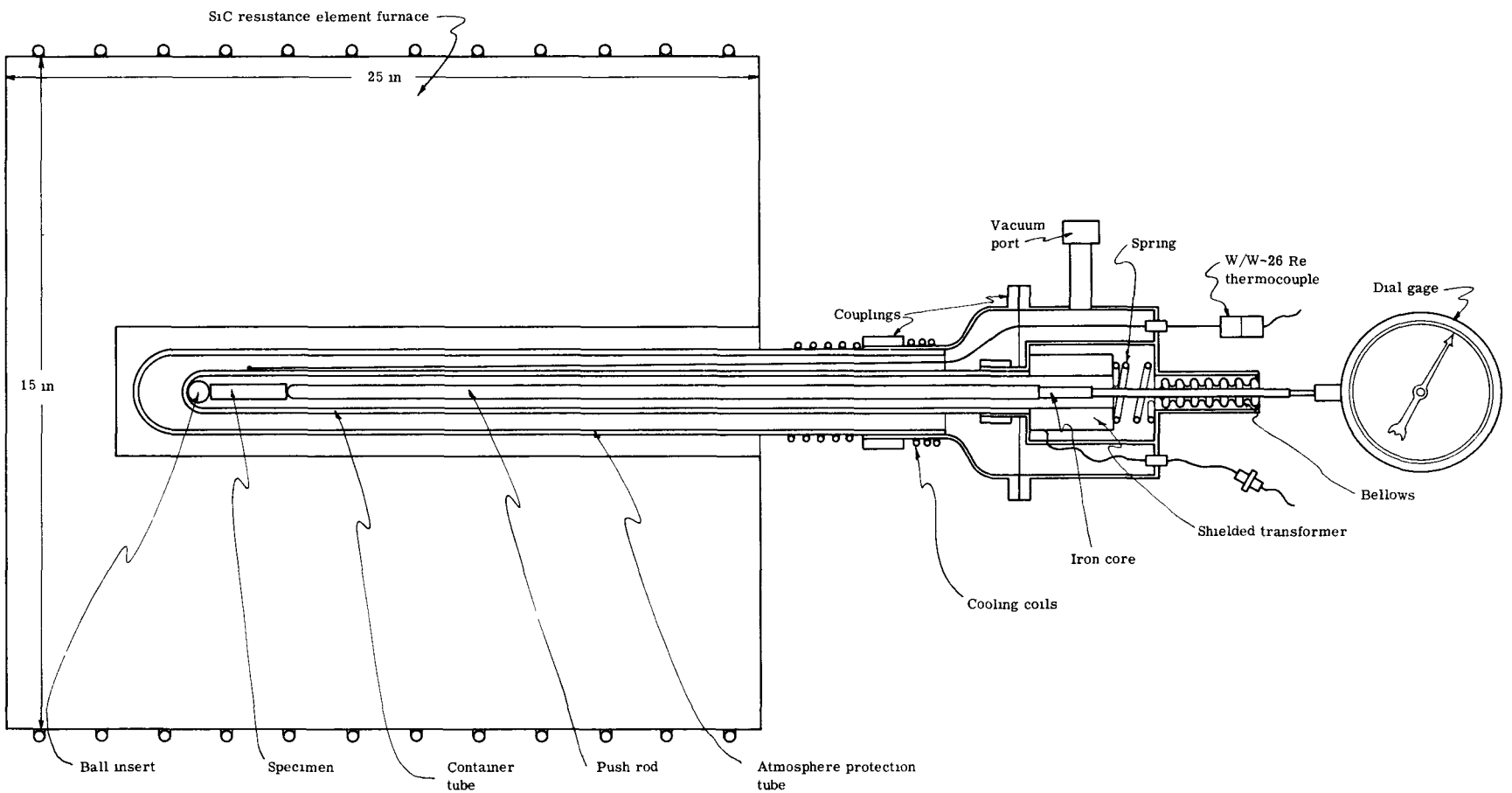

Fig. 11 — Schematic of dilatometer

3.9 MELTING POINT DETERMINATIONS

The melting point measurement of standards was completed and the measurement of carbides will be initiated.

The tantalum resistance furnace is used for the melting point determination. Temperatures are determined by a W/W-26% Re thermocouple in the base of the crucible used to hold the specimen and by an optical pyrometer located outside of the glove box. The optical pyrometer sights on a black body hole in the specimen.

Melting point standards were used to check the temperature correction of the pyrometer due to absorption by the sight glass, prism, and box window. The correction had been estimated previously by the method of increasing thicknesses of absorbent. Table 15 gives the accepted melting points of the standards together

Table 15 — Melting Point Standards

Material	Optical, °C (Observed)	Thermo-couple, °C	Optical, °C (Corrected)	Literature Value, °C
99.9+ copper	1060 ± 10	-	1094 ± 10	1083 ± 0.1
99.9+ titanium	1600 ± 10	1745 ± 20	1670 ± 10	1668 ± 10
99.9+ alumina	1950 ± 10	-	2040 ± 10	2040 ± 10
99.9+ niobium	2330 ± 15	-	2440 ± 15	2468 ± 10

with the observed and corrected melting points. Good agreement is found between the accepted and the absorption-corrected melting points. The slight deviations for copper and niobium show that the slope of the correction curve must be modified slightly. These standards will also be used to calibrate the W/W-26% Re thermocouple.

Two problems were encountered in the measurements: (1) difficulty in obtaining the manufacturer's rated temperature of 2500°C in the furnace, and (2) difficulty in obtaining reliable thermocouples. The furnace temperature problem was solved by the insertion of additional heat shields and by the replacement of the manufacturer's variable transformer with one of higher rating. The currently used swaged W/W-26% Re thermocouple design was revised, and bids are being obtained on the improved design.

Tantalum cups were carburized internally to hold the specimens during the melting point determination. When the melting point range has been narrowed by visual observation, thermal arrest will be employed to obtain a more accurate value. Special thermal arrest cups have been fabricated and carburized at United Nuclear for this purpose.

3.10 VAPOR PRESSURE MEASUREMENTS

The vapor pressure of a silver standard was determined.

The Knudsen effusion method is employed for the thermal stability and vapor pressure determinations (Fig. 12). The effusion container or cell is located near the centerline of a commercial tantalum resistance furnace adapted to the glove box. The temperature of the cell is measured with W/W-26% Re thermocouples.

The vapor effusing from the cell is collimated by a series of heat shields. A fixed fraction (depending slightly on temperature) of this vapor is deposited on a water-cooled stainless steel target. To determine this fraction and thus calibrate the geometry of the cell and collimator system in the glove box, a 50 mg sample of high purity (99.999%) silver was run in a tantalum cell. The diameter of the cell was 3/8 in. and the effusion orifice was 0.0097 in. in diameter. The small ratios of orifice area to cell area and the small ratio of orifice plate thickness (0.00075 in.) to orifice diameter minimize channeling and nonequilibrium effects.

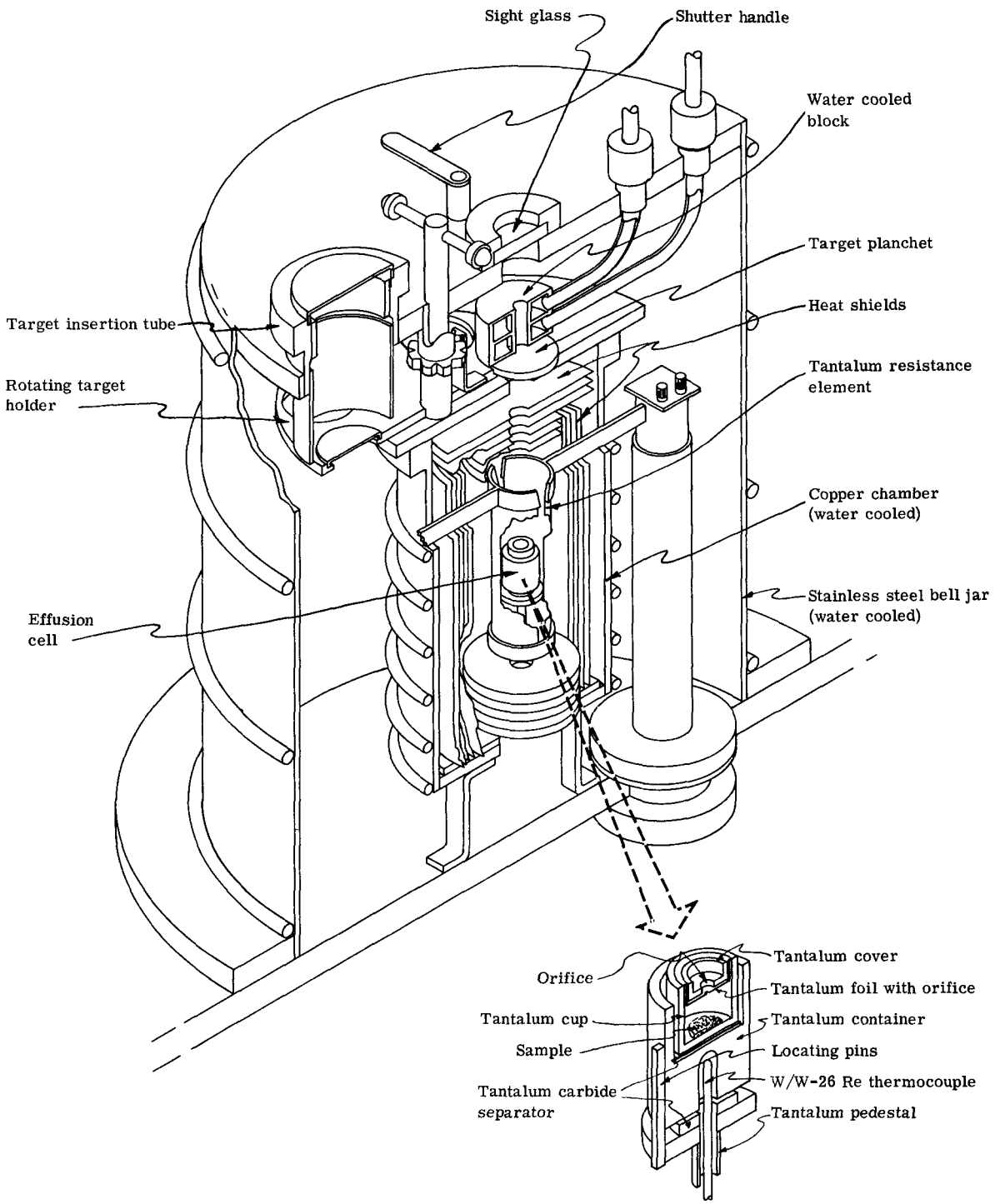

Fig. 12 — Schematic of thermal stability experiment

The cell was run at temperatures near 1400, 1500, and 1600°K. The microquantities of silver collected on the targets were analyzed calorimetrically by comparison with standards. The data obtained are given in Table 16 .

Knowing the vapor pressure of silver, the fraction of vapor collected is then the ratio of the silver deposited on the target to that calculated to have effused from the cell during the known time interval. This calibrated fraction would be used as the fraction to be collected in future experiments with the carbides. A fairly constant figure of 0.0224 is evident from the table. However, calculations of this fraction, based purely on geometry, indicate a figure of 0.0120. As yet, the reason for this difference has not been uncovered, but it is suspected that bouncing from the hot surfaces is an important effect contributing to the difference.

Since UC and PuC react with tantalum at the test temperatures to produce free uranium and plutonium, and tantalum carbide, the fuel carbides must be separated from tantalum during the tests. In addition, tantalum vapor may interfere with the effusing vapor. To remedy both problems, the tantalum cells are carburized internally. To date, the cell bodies have been carburized successfully to produce a 0.001 to 0.004 in. carbide coating on the 0.010 in. cell wall, and a 0.0002 to 0.0003 in. coating on the 0.0007 in. cell cover.

3.11 PERFORMANCE TEST OF EQUIPMENT FOR PROPERTY MEASUREMENTS

Prior to the introduction of plutonium into the high temperature measurements box, a rigid performance test was made to assure the safe and efficient functioning of the equipment. The tests included:

helium leak test of the box and furnaces,
check of safety interlocks for excessive box vacuum, excessive diffusion pump temperature, low coolant flow and coolant supply,
furnace system operation,

Table 16 — Silver Vapor Pressure Test

Target	Temperature, °K	Time, sec	Accepted Vapor Pressure, mm Hg	Deposit,* μg	Calculated Weight Effused, μg	Fraction Collected
1	1403	2340	5.5×10^{-2}	24.0	1000	0.0240
2	1404	2280	5.5×10^{-2}	21.9	978	0.0224
3	1500	540	2.4×10^{-2}	21.7	979	0.0222
4	1503	540	2.4×10^{-2}	21.9	977	0.0225
5	1600	150	9.0×10^{-2}	23.8	985	0.0241
6	1601	180	9.0×10^{-2}	26.4	1180	0.0224
7	1498	600	2.4×10^{-1}	24.3	1090	0.0224

*Corrected for slight blockage of target.

box pressure stability,

inflow of air through potential glove and pouch breaks,

box atmosphere (nitrogen) purity stability.

Immediately after the completion of the 24-hr purity test, dilatometry, melting point, and vapor pressure determinations of standards were made. These are described in Sections 3.7, 3.8, and 3.9. After these tests were completed, a report including all performance test data was submitted to a United Nuclear review board. Upon approval, plutonium material was pouched into the box.

4. IRRADIATION TESTS

4.1 EXPERIMENT DESIGN AND ASSEMBLY

The detailed description of the irradiation tests is in UNC-5055, Section 4.3. In summary, each irradiation capsule contains two specimens. Each specimen consists of 16 fuel pellets, 0.191 in. diameter, for a 3 in. fueled length, clad in stainless steel or niobium. Both specimens contain $(U_{0.8}Pu_{0.2})C_{0.95}$, one without sintering aid and one with 0.1 w/o nickel sintering aid. The void space is filled with helium. The specimens designed to operate at less than 1040°C (1900°F) central fuel temperatures have a niobium central thermocouple well for temperature measurement, and for this reason are also clad with niobium. The higher temperature specimens do not have provision for fuel center temperature measurement. These specimens are clad with type 316 stainless steel, because this is potentially one of the most economical fuel clads for a fast, central station, power plant.

The basic design conditions for the capsules are given in Table 17.

During this reporting period, the assembly of Capsules 62, 63, 64, 65 and 66 and their associated instrumentation was completed. A number of design changes were made, based on data obtained from in-pile operation of the first capsules. The major changes are described below.

Capsule 61 and 62 indicated that the thermal resistance of the capsule and of the fuel were higher than estimated. In order to keep the fuel temperatures within

Table 17 — Design Irradiation Conditions for $(U_{0.8}Pu_{0.2})C_{0.95}$ Specimens

Capsule No.	Clad Surface Temperature, °F (°C)	Fuel Center Temperature, °F (°C)	Power		Burnup, MW-d/tonne
			kw/ft	kw/cm^3	
61	1060 (570)	1870 (1020)	14.4	2.56	16,600
62	1060 (570)	1870 (1020)	14.4	2.56	33,200
63	1065 (575)	1875 (1025)	14.0	3.04	66,400
64	1370 (740)	2660 (1460)	20.0	3.56	16,600
65	1275 (690)	2565 (1405)	20.0	3.56	33,200
66	1300 (705)	2575 (1410)	21.0	3.75	66,400

the desired limits in Capsules 61 and 62, the power was reduced from the 14.0 kw/ft design to the range of 10.5 to 12.5 kw/ft. This was done by putting cobalt flux suppressors in the neighboring experimental holes. Capsules 63, 65, and 66 were being assembled at the time and the capsule thermal resistance was decreased by increasing the inner shell fin width, in order to operate at the desired temperature and power levels.

Analysis of the flux monitors from the dummy capsule, which operated in Capsule 65's prospective core position for one cycle, indicated a higher than expected flux. Capsule 65, designed for 20 kw/ft, would have operated at 24.9 kw/ft (average) and 32.6 kw/ft (peak) power at the actual flux. The capsule was redesigned with a nickel outer shell and a solid nickel inner shell, to replace the previous stainless steel outer shell and finned stainless steel inner shell. The higher thermal conductivity of the nickel will permit the capsule to operate up to 28 kw/ft. Current plans are to run the capsule in a pool position for one cycle, prior to the core position, to make certain of the capsule heat transfer characteristics.

4.2 EXPERIMENT OPERATION

Ten of the 12 planned specimens are being irradiated. The capsules were inserted in the General Electric Test Reactor (GETR) and started up as follows.

Capsule No.	GETR Cycle No.	Startup Date
61	39	Nov. 26, 1962
62	40	Dec. 21, 1962
63, 64	41	Jan. 31, 1963
66	42	Mar. 3, 1963

Capsule 65 has been shipped to the reactor for startup with Cycle 43, in April. A photograph of the instrument consoles on top of the test reactor is shown in Fig. 13.

Fig. 13 — Instrument consoles on top of the GETR measuring (UPu)C specimen operating conditions

All of the specimens are operating as close to design temperatures as reactor power fluctuations will permit.

The capsule operating conditions are summarized in Table 18.

Table 18 — Summary of Specimen Operating Conditions (Startup to 3-31-63)

	Capsule No. and Startup Date				
	61 (11-24-62)	62 (12-19-62)	63 (1-29-63)	64 (1-29-63)	66 (3-3-63)
Temperature of Fuel Center, °F					
Upper specimen*					
Maximum	1970†	2150†	2250†	2400†	2420†
Average	1700†	1840†	1840†	2040†	2110†
Lower specimen*					
Maximum	1800 (measured to 1-3-63)	1800 (measured to 2-22-63)	1900	2580†	2680†
Average	1690 (measured to 1-3-63)	1600 (measured to 2-22-63)	1550	2150†	2100†
Temperature of Clad Surface, °F					
Upper specimen*					
Maximum	1185	1320	1250	1360	1325
Average	1080	1150	1040	1210	1150
Lower specimen*					
Maximum	1185	1190	1010	1460	1300
Average	1090	1050	900	1270	1090
Specimen Heat Generation Rate, w/in.					
Upper specimen*					
Maximum	980	1040	1250	1200	1210
Average	780	855	1010	960	1125
Lower specimen*					
Maximum	980	970	1160	1290	1520
Average	790	840	950	1010	1240
Cumulative Burnup, MW-d/tonne					
Upper specimen*	13,000	11,400	10,700	8400	6400
Lower specimen*	13,000	11,400	10,700	8400	6400
Average Thermal Conductivity of Fuel Plus Helium Gap, Btu/hr-ft^2-°F-ft					
Upper specimen*	Thermocouple inoperative	Thermocouple inoperative	5.0 (measured to 1-31-63)	‡	‡
Lower specimen*	4.8 (measured to 1-3-63)	5.1 (measured to 1-18-63)	4.6		
Average Thermal Conductivity of Fuel (assuming helium gap conductance of 2000 Btu/hr-ft^2-°F)					
Upper specimen*	Thermocouple inoperative	Thermocouple inoperative	13.0 (measured to 1-31-63)	‡	‡
Lower specimen*	12.1 (measured to 1-3-63)	14.1 (measured to 1-18-63)	11.4		

*Upper specimen contains $(U_{0.8}Pu_{0.2})C_{0.95}$ + 0.1% Ni. Lower specimen contains $(U_{0.8}Pu_{0.2})C_{0.95}$.
†Calculated from known heat generation rate and assumed overall thermal conductivity of 4.5 Btu/hr-ft^2-°F-ft.
‡Cannot be calculated because there are no thermocouples in fuel.

5. REPROCESSING OF IRRADIATED UC

At the request of the AEC, the UC pellets irradiated and examined in Phases III and IV of this Program were shipped to Oak Ridge National Laboratory for reprocessing studies.

DISTRIBUTION

	No. of Copies
U. S. Atomic Energy Commission	
Division of Reactor Development	
J. Simmons, Chief, Fuels and Materials Development Branch	2
Dr. G. W. Wensch, Chief, Liquid Metal Cooled Reactors Branch	3
William Rice	2
New York Operations Office	
L. Topper	
M. Plisner, Contracts Division (Industrial)	2
Brookhaven National Laboratory	
H. S. Potter, Chief, New York Patent Group	1
Chicago Operations Office	
C. A. Pursel, Director, Reactor Engineering Division	1
Oak Ridge Operations	
D. F. Cope, Director, Reactor Division	1
Hanford Operations Office	
J. Musser	1
Office of Technical Information	3
Oak Ridge National Laboratory	
J. Frye, Metallurgy Division	1
Nuclear Materials and Equipment Corporation	
K. Puechl, Acting Director, Advanced Materials Center	1
Argonne National Laboratory	
Dr. Hoylande Young	4
Battelle Memorial Institute	
Dr. Russell W. Dayton	1
General Electric Company	
Dr. Karl Cohen, San Jose, California	1

Hanford Laboratories Operation, General Electric Co.
I. D. Thomas 1

Monsanto Chemical Co., Mound Laboratory
Dr. L. V. Jones 1

Atomics International
Dr. Harry Pearlman 1

Dow Chemical Company, Rocky Flats Plant 1

Los Alamos Scientific Laboratory
R. Baker 1

Lawrence Radiation Laboratory
Carl Cline, Livermore Lab. 1

Power Reactor Development Company
R. W. Hartwell, General Manager 1