CONF-970495--1

Western State Section/The Combustion Institute 1997 Spring Meeting
April 14 & 15, Livermore, California
SAND97-0188C

SAND--97-0188C

Semiconductor Bridge, SCB, Ignition of Energetic Materials†

R. W. Bickes, Jr., M. C. Grubelich, S. M. Harris, J. A. Merson, and W. W. Tarbell
Sandia National Laboratories
Albuquerque, NM 87185-1453 USA

ABSTRACT

Sandia National Laboratories' semiconductor bridge, SCB, is now being used for the ignition or initiation of a wide variety of exeoergic materials. Applications of this new technology arose because of a need at the system level to provide light weight, small volume and low energy explosive assemblies. Conventional bridgewire devices could not meet the stringent size, weight and energy requirements of our customers. We present an overview of SCB technology and the ignition characteristics for a number of energetic materials including primary and secondary explosives, pyrotechnics, thermites and intermetallics. We provide examples of systems designed to meet the modern requirements that sophisticated systems must satisfy in today's market environments.

INTRODUCTION

Most electroexplosive devices contain a small metal bridgewire heated by a current pulse from a firing set with nominal output voltages ranging from one to several tens of volts. Heat transport is by means of thermal conduction from the bridgewire to the exoergic material next to the wire, producing an explosive output typically measured in milliseconds after the onset of the current pulse. No-fire (the maximum current that can be applied to the bridgewire for a period of time without causing ignition) and all-fire (the minimum current level required for reliable ignition) current levels are often strongly dependent upon the exoergic material and the physical construction of the explosive device. In addition, because the manufacture of many bridgewire devices is often a tedious, time consuming and inexact process, investigators have looked at alternative ignition methods.

The Sandia semiconductor bridge, SCB, has three forms and was patented in 1987[1] and 1990.[2] Devices incorporating the 1987 art have been incorporated into Sandia, Department of Defense (DoD) and commercial systems. In addition, Sandia and University of New Mexico technology transfer programs successfully created a small business in New Mexico (SCB Technologies Inc.) in 1989 for the production of SCB "chips." SCB Technologies was acquired by Ensign-Bickford Industries, March 1995.

The 1987 patent describes the device shown in Fig. 1. It consists of a small doped polysilicon (or silicon) volume formed on a silicon (or sapphire) substrate. The length of the bridge is determined by the spacing of the aluminum lands seen in the figure. The lands provide a low ohmic contact to the underlying doped layer. Wires ultrasonically

†This work was supported by the United States Department of Energy under Contract DE-AC04-94AL8500. Sandia is a multiprogram laboratory operated by Sandia Corporation, a Lockheed Martin Company, for the United States Department of Energy.

MASTER

DISTRIBUTION OF THIS DOCUMENT IS UNLIMITED

DISCLAIMER

This report was prepared as an account of work sponsored by an agency of the United States Government. Neither the United States Government nor any agency thereof, nor any of their employees, make any warranty, express or implied, or assumes any legal liability or responsibility for the accuracy, completeness, or usefulness of any information, apparatus, product, or process disclosed, or represents that its use would not infringe privately owned rights. Reference herein to any specific commercial product, process, or service by trade name, trademark, manufacturer, or otherwise does not necessarily constitute or imply its endorsement, recommendation, or favoring by the United States Government or any agency thereof. The views and opinions of authors expressed herein do not necessarily state or reflect those of the United States Government or any agency thereof.

DISCLAIMER

Portions of this document may be illegible in electronic image products. Images are produced from the best available original document.

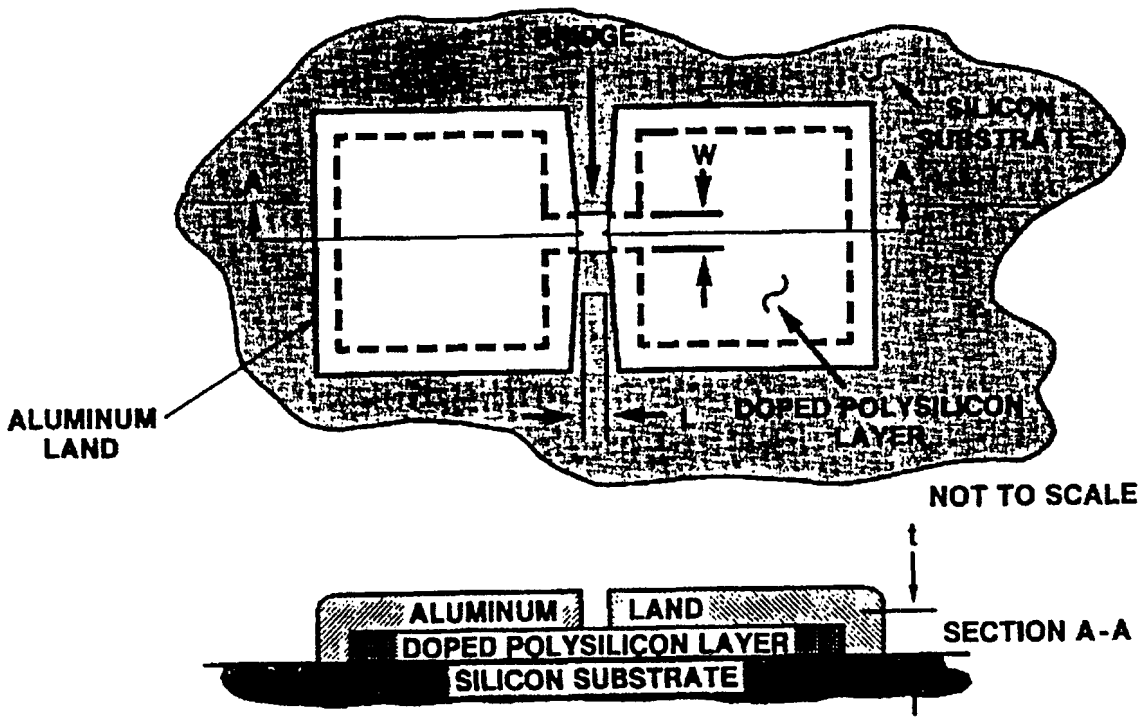

Figure 1. Simplified sketch of a silicon SCB. The bridge is formed out of the heavily doped polysilicon layer enclosed by the dashed lines. The overlying aluminum lands define the bridge length and provide a low ohmic contact to the polysilicon layer. Wires are bonded to the lands to permit current flow from land to land through the bridge.

bonded to the lands permit a current pulse to flow from land to land through the bridge; the ultrasonic process produces very strong bonds and is a cost effective procedure. The doped layer is typically 2 μm thick; bridges are nominally 100 μm long and 380 μm wide. Bridge resistance at ambient conditions is 1 Ω; however, the bridge dimensions can be easily altered to produce other resistances.

Passage of current through the SCB causes it to burst into a bright plasma discharge that heats the exoergic material pressed against the bridge by a convective process that is both rapid and efficient. Consequently, SCB devices operate at very low energies (typically less than 5 mJ) and function very quickly producing an explosive output in less than 50 μs for pyrotechnic devices. But despite the low energy for ignition, the substrate provides a very large and reliable heat sink for excellent no-fire levels; in addition, the devices are ESD (electrostatic discharge) and RF (radio frequency) tolerant.

Department of Energy (DOE) Systems

Aerospace Devices

In 1992[3] we described a study that compared a standard Sandia bridgewire actuator with the same device retrofitted with an SCB. We reported that the SCB units had an all-fire input energy of 2.7 mJ at -54 C versus 32.6 mJ at ambient for the conventional device. In addition, the no-fire level for the SCB device was 1.2 A at 74 C versus 1.0 A for the bridgewire design at ambient. The results prompted Sandia's Aerospace Systems Center to ask us to design two SCB-ignited gas generators for flight applications for one of its

programs. Of particular interest to the Aerospace Center were the low energy requirements of the SCB igniter and the replacement of a heavy mechanical system with a light-weight explosive assembly. The SCB assemblies provide significant savings in weight and volume both in terms of the explosive device itself and also because of the compact and low mass firing set that was designed for these applications.

The requirement for the first gas generator system was to design a payload ejection system that was beyond the physical capabilities of mechanical spring powered systems. The SCB actuator contained THKP (titanium sub-hydride potassium perchlorate, $TiH_{1.65}/KClO_4$). The gas output from this device was used to drive a piston that ejected a payload from a flight vehicle. The requirement for the second device was to generate a sufficient quantity of gas at a controlled rate to perform mechanical work in order to erect a structure. In this case the previously mentioned actuator was used as an igniter to light a composite propellant gas generator. Once again, due to mass and volume limitations of the overall system, existing (non-SCB) electro-explosive technology could not be employed. The SCB devices were flight approved and have flown successfully many times since 1994.

Other SCB Devices

The Sandia Transportation Systems Center had need for several explosive devices assembled into a single volume. Here the electrical system size requirements were critical and the firing set size needed for conventional bridgewire devices did not meet this customer's needs. The two SCB devices developed (MC4492 actuator and the MC4491 initiator) have been described by Sanchez and Tarbell.[4] A prototype firing set used for laboratory tests is shown in Fig. 2 and forms the basis for the firing system for this application. This single firing set is used for both the detonator and the actuator obviating the need for two separate firing systems.

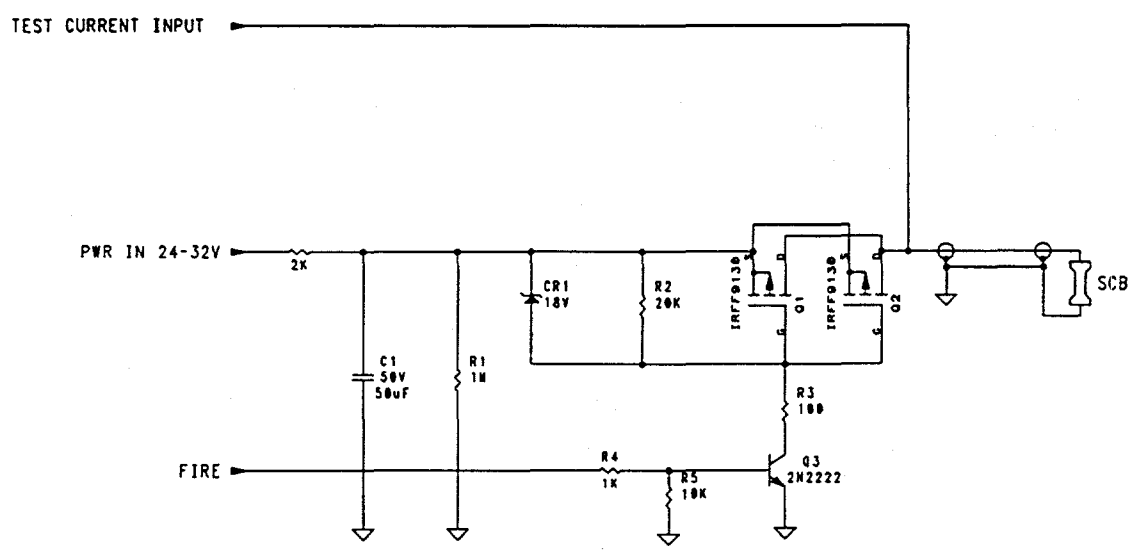

Figure 2. Wiring schematic for a capacitor discharge (CDU) firing set; C_1 is the charge capacitor. Two FET switches in parallel provide for a lower on resistance. High side switching is employed in order that the explosive device is at ground. R_1 is a current bleed for safety.

The MC4492 (see Fig. 3) is a dual mix device developed to satisfy the requirement of a

component that could act as an actuator (gas generator) as well as an igniter (hot particle producer). THKP and a thermite (CuO/Al) were used in this device with 50 mg of THKP pressed against the SCB and 205 mg of CuO/Al thermite pressed on top of the THKP. Upon application of the firing signal, the SCB ignites the THKP which in turn ignites and ejects

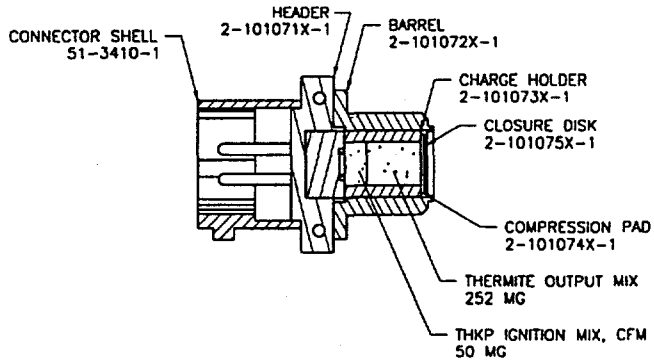

Figure 3. Schematic of the MC4491 actuator.

the high density thermite composition. The THKP produces a fast, high-pressure gas pulse capable of performing mechanical work through the expansion of the hot, high-pressure gas. The thermite produces a long thermal pulse via the formation of copper in the vapor, liquid and solid states. This hot copper is an excellent igniter for the high ignition energy requirements of composite propellants. Peak pressures in excess of 300 psi were measured in a 10-cc bomb, while the thermal output is greater than 1000 cal/g. The heated debris includes molten copper and aluminum oxide droplets. The Transportation Systems Center was able to replace numerous specialized bridgewire igniter and actuator components using several exoergic materials with this one SCB component, thereby reducing cost as well as meeting stringent safety specifications. Additionally, the SCB allowed for the firing set volume specifications to be met.

The MC4491 (see Fig. 4) initiator was designed to produce a high-velocity flying metal plate when initiated by the firing set shown in Fig. 2. It used the deflagration-to-detonation transition (DDT) of the explosive CP.[5] The ignition increment consisted of a medium density

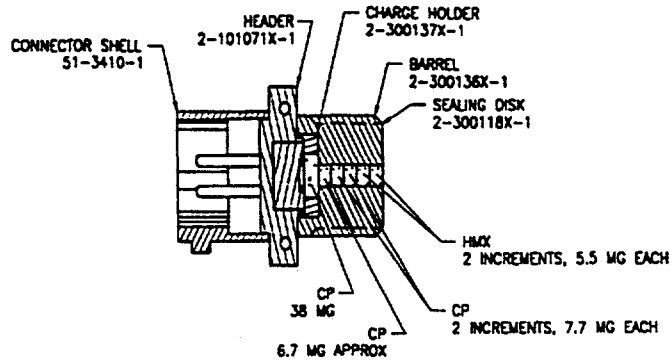

Figure 4. Schematic of MC4491 Initiator

pressing (25 kpsi) of the powder against the SCB, followed by the low-density (10 kpsi) DDT column of CP followed by an HMX (cyclotetramethylene tetranitramine) output pellet. Performance tests demonstrated the capability of the initiator to accelerate a 5-mil steel disk to velocities in excess of 2.8 mm/μs in a distance on the order of 1.5 mm. In addition, the flying disk remains intact for distances well beyond that required for its application.

The Sandia California Weapon Development Center requested the design of a detonator that met both strict volume and source voltage requirements. The SCB detonator was a conventional SCB design that used the explosive CP. The key to this system was the firing set[6] similar to that shown in Fig. 5. The incorporation of a voltage multiplying circuit permits the use of a small volume capacitor and a compact firing set.

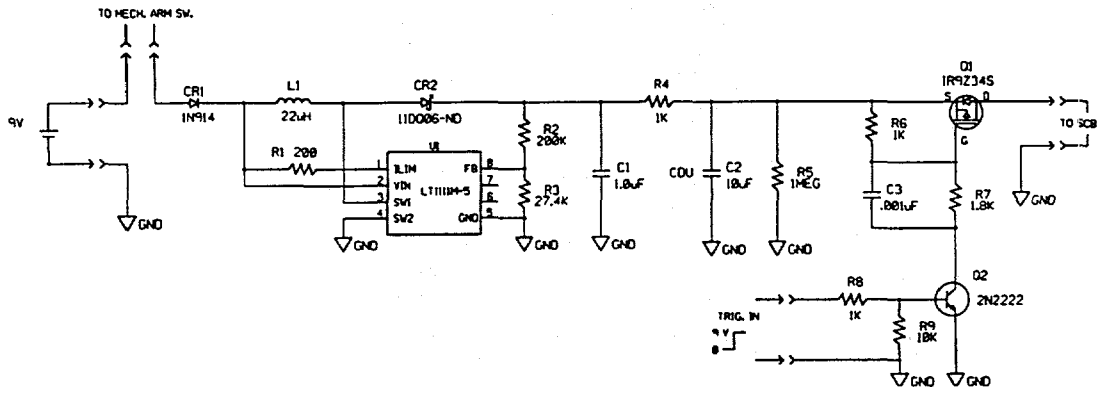

Figure 5. This miniature SCB firing set features a small chip that quadruples the input voltage. The entire circuit can be housed in a very small volume.

Advanced Studies

SCB Slapper

We have been working on the development of an SCB slapper detonator for the last four years. In this device a flyer material is coated over the bridge region (see Fig. 6). When the SCB functions, the plasma discharge propels the flyer material into a secondary explosive such as HNS (hexanitrostilbene) or PETN (pentaerythritol tetranitrate). The flyer impact on the secondary explosive causes a prompt shock initiation. Several different bridge dimensions and thicknesses have been studied, along with different flyer materials. Currently, polyimide is being used as the flyer material because it is amenable to photoprocessing. We expect the cost per unit will be at least an order of magnitude less than exploding foil initiators (EFI's) because of the manufacturing techniques employed. In addition, we believe energy requirements will be significantly lower because the bridge and flyer can be tailored to any dimension, allowing for optimization not possible with EFIs. Indeed, in testing with similar bridge dimensions and flyer thicknesses to EFIs, the SCB Slapper has demonstrated energy reductions of 20 to 30 per cent.

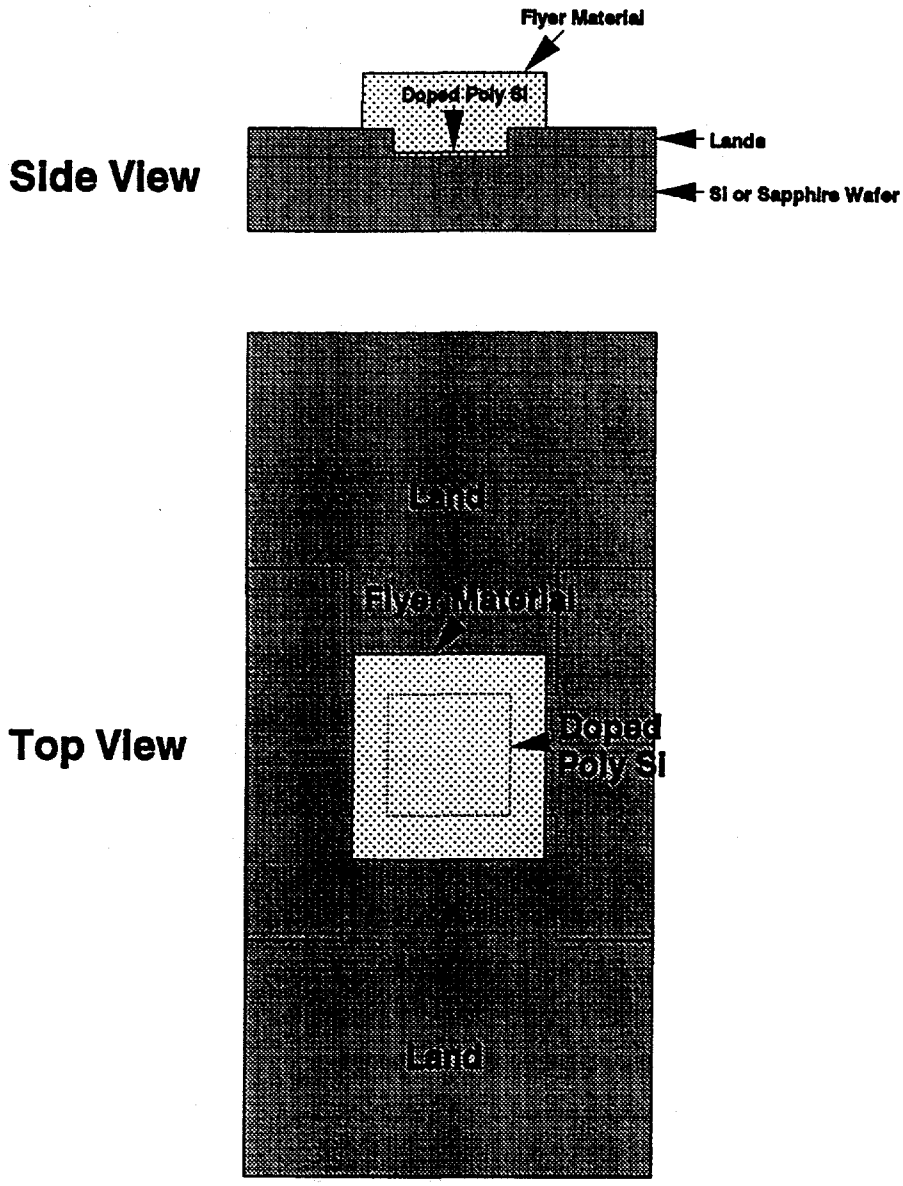

Figure 6. The basic layout of an SCB Slapper chip. A silicon or sapphire wafer with a doped polysilicon layer is etched to the pattern as shown. The remaining doped polysilicon forms the bridge region shown in the center of the top view. The lands, shown on both sides of the doped polysilicon are formed from aluminum, gold, or copper. Finally, the flyer material is shown over the doped polysilicon and part of the lands.

Mil. Std. 1316D Detonators

We evaluated several insensitive explosives defined by Mil. Std. 1316D as well as high density PETN for possible detonator applications with SCBs. These materials all required a run-up to detonation from the impulse received from the SCB. The run-up may be considered as a DDT process. The CDU firing sets for these experiments operated at voltages up to 3.5 kV. The test plan included heavy confinement fixtures (Fig. 7) to determine feasibility, and we also looked at reduced confinement (shorter length and smaller diameter explosive columns) for potential applications.

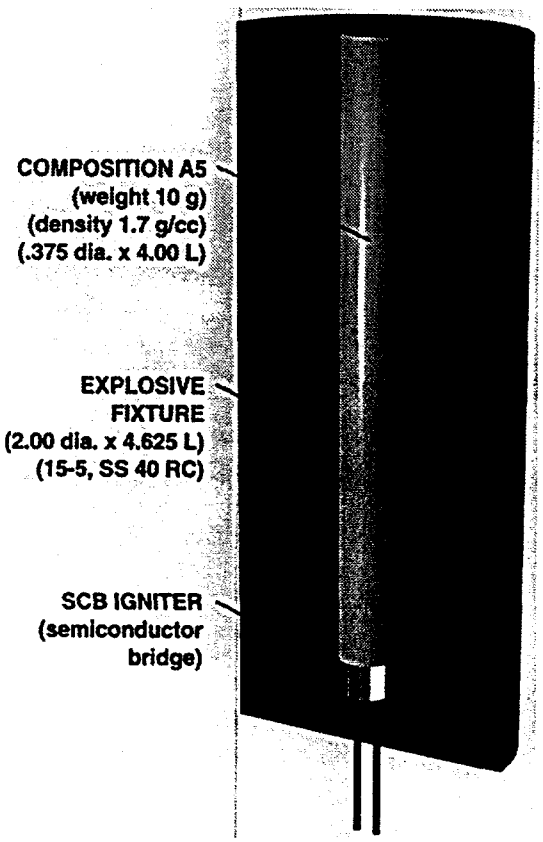

Figure 7. Test fixture for the Mi. Std. 1316D studies.

The powders studied included Comp A-5 (1.5% stearic acid and 98.5% RDX, which is hexahydro-1,3,5-trinitro-s-triazine), PBXN-5 (5% Viton A and 95% HMX), HNS IV (hexanitro stilbene), PBX 9407 (94% RDX and 6% Exon 461) and PETN. The results are summarized in Table I.

TABLE I. Powder Combinations in Insensitive Explosive Characterization

Explosive	Density	Detonation
Comp A-5	1.7	Yes
PBXN-5	1.83	No
HNS IV	1.6	No
PBX 9407	1.8	No
PETN	1.2, 1.4, 1.67	Yes

DDT of Comp A-5 with a density of 1.7 g/cc was demonstrated using the fixture in Figure 7. Explosive column diameters of 0.375" and 0.250" and column lengths of 4" were used. The charge volume contained approximately 12 g of the explosive. Several voltages ranging from 500 to 3,500 V with a 1 μF capacitor resulted in successful DDT. Using a 35 V, 20 μF CDU, we were unable to achieve ignition of the explosive. When the confinement around the Comp A-5 was lost due to yield of the metal casing, DDT was not achieved. Attempts with PBXN-5 (1.83 g/cc), HNS IV (1.6 g/cc) and PBX 9407 (1.8 g/cc) all proved unsuccessful. Experiments with PETN at densities ranging from 1.2 g/cc to 1.67 g/cc proved very

successful. This led to our development of a PETN device for a Department of Defense (DoD) application.

The above experiments demonstrated that a DDT detonator using an SCB can be built with a Mil Std. 1316D approved explosive. The intent, however, of the fuzing standard is to avoid situations where DDT can be a potential safety problem. This points the difficulty of specifying system safety based solely on an explosive powder characteristic. Individual components must be characterized in their complete full-up configuration and individual systems should receive the same level of review. Qualification of whole systems and components should demonstrate safety.

Department of Defense (DoD) Systems

We studied the RF vulnerability of SCB devices designed by SCB Technologies, Inc. for use in the Navy Phalanx program[7] and in DoD cartridge actuated devices. We injected RF power directly into these devices. The units withstood power levels of 5 watts at 10 MHz and 15 Watts at 450 MHz for 5 minutes without damage to the devices. We are also studying the use of SCB devices in sonobuoy applications.

Commercial Systems

With support from the National Machine Tool Partnership, we assisted Thiokol/Elkton in their design of the actuator for the Conax-Florida Universal Water Activated Release System (UWARS). This device is housed in the buckle connecting the pilot's harness to the parachute and will release the parachute upon entry into sea water. Conax-Florida[8] was able to design a significantly smaller device utilizing the SCB as opposed to conventional bridgewire components. We studied the RF vulnerability of the Halliburton RED™ oil well perforator. This product was announced in April 1995 and is claimed to be operable in severe electromagnetic environments caused by powerful communication equipment and welding operations.[9]

Thermites and Intermetallics

We designed the thermite torch assembly shown in Fig. 8. This device was loaded with 153 mg of Al/CuO and pressed to a density of 2.5 g/cm.[3] The firing set was a 20,000 μF CDU charged to 28 V. A graphite plug with a 1.58 mm nozzle was inserted into the charge holder onto the output charge. The design of this torch is unique because of the configuration of the thermite charge. Typically, torches use a center-perforated, cylindrical grain. In contrast, our design incorporated a reversed end burning charge (i.e. the thermite is ignited at the header end and burns towards the nozzle). This greatly simplified loading and ignition of the thermite. This unit produced an output flame (see Fig. 9.) at least 0.3 m long and drilled through a 0.25 mm stainless steel shim stock in a few milliseconds.

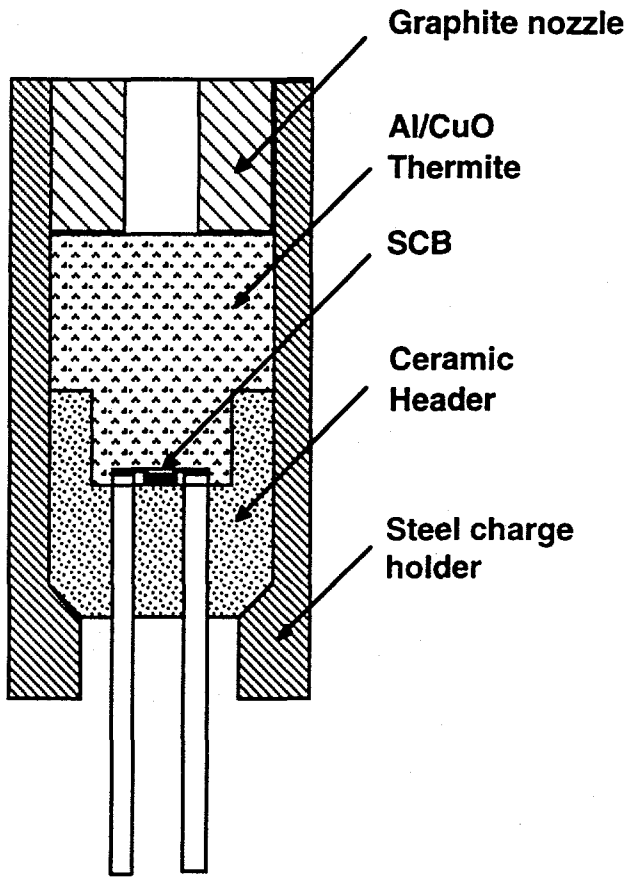

Figure 8. Thermite torch consisting of a ceramic header mounted in a steel charge holder. The thermite is pressed to a density of 2.5 g/cm^3; the graphite plug with a 1.58 mm (0.062") nozzle is inserted into the charge holder onto the output charge.

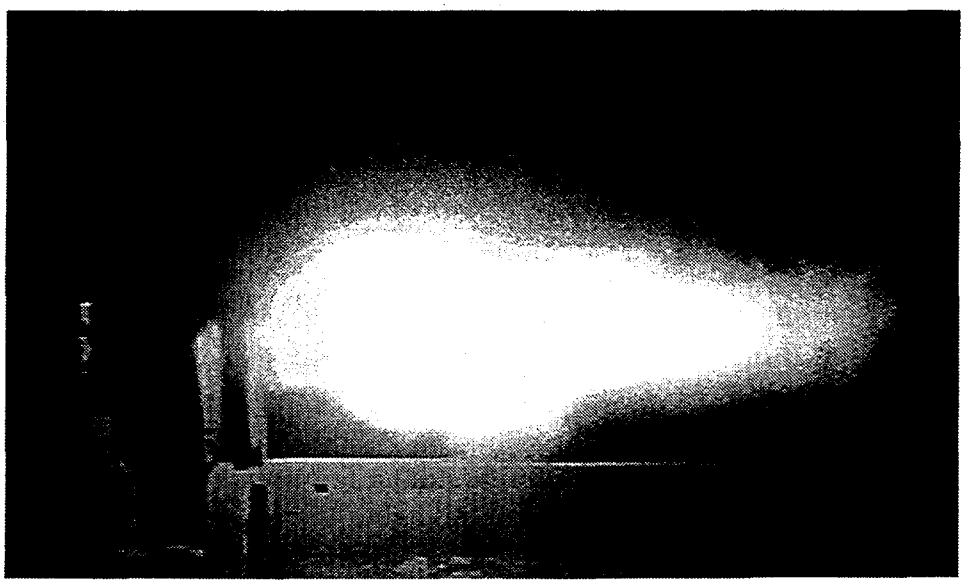

Figure 9. Photograph of flame output from thermite torch.

We carried out experiments with the intermetallic compound Al/Pd. The device is shown in Fig. 10 and consisted of a Riebling (plastic) header epoxied into a steel charge holder, a load of 100 mesh Al/Pd (bulk density), and for some of the tests, a Pyrofuze™ wire inserted into the bulk material held in place by the graphite seal. The 20,000 μF CDU at 28 V was also used for this study. Ignition of the bulk material was indicated by the sparkling Al/Pd material. The Pyrofuze™ was consumed in few milliseconds.

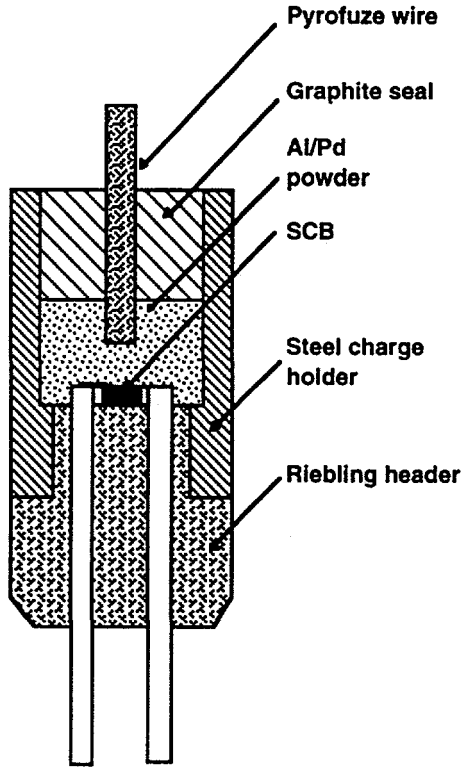

Figure 10. Al/Pd device consists of a Riebling (plastic) header, a load of 100 mesh Al/Pd (density) over the SCB and a pyrofuze fuze wire inserted into the bulk material.

SUMMARY

We have used the SCB for several applications for system requirements that could not be met using conventional electroexplosive (i.e. bridgewire or metal foil) devices. The low energy inputs of the SCB coupled with its excellent no-fire safety and use of insensitive materials permitted the development of successful designs for our customers' applications. We point out however that the mere use of so-called insensitive materials does not in itself guarantee device safety; our Mil. Std. 1316D studies revealed that a properly designed system configuration can produce outputs not anticipated by the Mil. Std. We also want to stress the need to look at overall applications and not merely the individual components.

For additional information about SCB technology, please contact Bob Bickes, Sandia National Laboratories, (505)844-0423 or rwbicke@sandia .gov.

REFERENCES

[1] R. W. Bickes, Jr., A. C. Schwarz, U.S. Patent 4,708,060 (Nov. 1987).

[2] D. A. Benson, R. W. Bickes, Jr., R. W. Blewer, U.S. Patent 4,976,200 (Dec. 1990).

[3] R. W. Bickes, Jr., S. L. Schlobohm, D. W. Ewick, 13th International Pyrotechnics Seminar, Grand Junction, CO (July 1988).

[4] W. W. Tarbell, D. H. Sanchez, AIAA 32st Joint Propulsion Conference and Exhibit, San Diego, CA (July 1995).

[5],See M. L. Lieberman and J. W. Fronabarger, "Status of the Development of the {2-[5-Cyanotetrazolato]pentaamminecobalt (III) Perchlorate} for DDT Devices, 7th International Pyrotechnics Seminar, Vail CO (July 14-18, 1980).

[6] Firing set design provided by John Weinlein, Firing and Mechanical Design Department, Sandia National Laboratories.

[7] R. W. Bickes, Jr., D. Greenway, M. C. Grubelich, W. J. Meyer and J. K. Hartman & C. B. McCampbell, JANNAF Interagency Propulsion Committee Combustion Meeting, (Oct. 1992).

[8] D. Nowakowski, "Using Semiconductor Bridge Technology in a Life Support Application," 1996 SAFE Symposium, Reno, NV.

[9] J. Motley and J. Barker, "Unique Electrical Detonator Enhances Safety in Explosive Operations: Case Histories," 1996 Society of Petroleum Engineers Annual Technical Conference and Exhibition, Denver, CO (October 6-9, 1996).