Submitted to AEC Division of Applied
Technology Geothermal Committee
Meeting, Idaho Falls, ID, Aug. 7-8, 1973

LBL-2102
CONF-730846--1

COMPARISON OF ELEMENTARY GEOTHERMAL-BRINE POWER-PRODUCTION PROCESSES

M. A. Green and A. D. K. Laird

August 2, 1973

Prepared for the U.S. Atomic Energy Commission
under Contract W-7405-ENG-48

LAWRENCE BERKELEY LABORATORY
UNIVERSITY OF CALIFORNIA
BERKELEY

MASTER

LBL-2102

DISTRIBUTION OF THIS DOCUMENT IS UNLIMITED

DISCLAIMER

This report was prepared as an account of work sponsored by an agency of the United States Government. Neither the United States Government nor any agency Thereof, nor any of their employees, makes any warranty, express or implied, or assumes any legal liability or responsibility for the accuracy, completeness, or usefulness of any information, apparatus, product, or process disclosed, or represents that its use would not infringe privately owned rights. Reference herein to any specific commercial product, process, or service by trade name, trademark, manufacturer, or otherwise does not necessarily constitute or imply its endorsement, recommendation, or favoring by the United States Government or any agency thereof. The views and opinions of authors expressed herein do not necessarily state or reflect those of the United States Government or any agency thereof.

DISCLAIMER

Portions of this document may be illegible in electronic image products. Images are produced from the best available original document.

LBL-2102

CONF-730846--1

COMPARISON OF ELEMENTARY GEOTHERMAL-BRINE POWER-PRODUCTION PROCESSES*

M. A. Green and A. D. K. Laird

Lawrence Berkeley Laboratory
University of California
Berkeley, California 94720

ABSTRACT

A comparison of three simple geothermal power-production systems shows that the flashed steam and the compound systems are favored for use with high-temperature brines. The binary system becomes economically competitive only when used on low-temperature brines (enthalpies less than 350 Btu/lb). Geothermal power appears to be economically attractive even when low-temperature brines are used.

NOTICE

This report was prepared as an account of work sponsored by the United States Government. Neither the United States nor the United States Atomic Energy Commission, nor any of their employees, nor any of their contractors, subcontractors, or their employees, makes any warranty, express or implied, or assumes any legal liability or responsibility for the accuracy, completeness or usefulness of any information, apparatus, product or process disclosed, or represents that its use would not infringe privately owned rights.

*Work performed under auspices of the USAEC.

DISTRIBUTION OF THIS DOCUMENT IS UNLIMITED

COMPARISON OF ELEMENTARY GEOTHERMAL-BRINE POWER-PRODUCTION PROCESSES

Introduction

It is generally expected that most of the geothermal resources in the United States that could be exploited by minor extensions of present technology are in the form of hot-water reservoirs (90).* The realization of such extensions at an early date might significantly improve the Nation's energy situation.

Many variations of the basic power-production methods—steam turbine cycles, secondary-fluid turbine cycles, and mixed-phase turbine cycles (146, 166, 180, 224)—are possible, and several have been advanced as outstandingly suitable for given sets of conditions. Unfortunately, agreement on which is the best has not been reached because suitable bases for comparisons have not been worked out. Major deterrents to valid comparisons are the wide range of plausible choices of the many parameters to be specified and the generally unwarranted amount of effort required to completely optimize operating conditions. Consequently, as a step toward establishing a common basis for comparison, simple cases of the three basic geothermal power-production systems have been worked out for consistent sets of conditions.

The systems considered were a simple flashed-steam plant, an elementary binary-fluid plant, and a simple compound flash two-phase turbine system. The boundary conditions common to the three systems were:

- well flow rates of 10^6 lb of fluid per hour;
- well fluid enthalpies of 300, 400, 500, and 600 Btu/lb;
- two heat-rejection systems: evaporative cooling which permits economic heat rejection at 120°F and an air-cooled condenser which permits economic heat rejection at 160°F;
- basic interest rate of 7%;
- plant lifetime of 30 years;

---

*Numbers in parentheses refer to pages in "Geothermal Energy", edited by P. Kruger and C. Otte, Stanford University Press, Stanford, Calif., 1973.

- 90% annual service factor for the power plant and a 100% service factor for the well;
- well fluid properties that were the same as pure water;
- simplified optimization of intermediate conditions which was carried out on the basis of minimum unit power cost.

This paper presents the results of the cost calculations and some conclusions that may be drawn from simplified calculations. The comparisons shown here may be useful for establishing the probability of a given system being most appropriate for a particular set of conditions.

System Description

a) Simple Flashed-Steam Plant

The flashed-steam plant has been used in a number of geothermal fields around the world. The cycle shown in Figure 1, which is the simplest version of the flashed-steam plant, is the one we have chosen to analyze for our comparison. The advantages of the simple flashed-steam plant are:

- Plant components are simple and cheap.
- Evaporative cooling may be used in dry areas because the condensate (relatively pure water) may be used as make-up water for the cooling towers.
- Reasonably good cycle efficiencies are obtainable with high-quality geothermal wells.

The disadvantages of the simple flash system are:

- At low rejection temperatures, the steam turbine is large and expensive in comparison to the power it produces.
- The steam turbine is subject to fouling if the steam from the flashed brine is corrosive.
- Steam from the flashed brine enters the turbine on the saturated vapor line. The result is a relatively inefficient steam turbine system.

- The flashed-steam system does not utilize all of the available energy in the well fluid at the maximum temperature the well is capable of producing.

Some of the preceding disadvantages may be overcome in part by multiple staging of the flash tanks. Well fluids of high quality (H = 600 Btu/lb) should undergo two or three stages of flashing. As the input enthalpy of the well fluid goes down, more than one stage of flashing is less justifiable from an economic standpoint.

The single-stage flash tank pressure was optimized for minimum power cost. The optimum pressure is a function of both rejection temperature and well-water input enthalpy. A turbine efficiency of 0.85 was assumed for this system because this kind of efficiency is achieved in today's power turbine. It is not clear that this efficiency is obtainable over the long run in a flashed-steam system.

b) Binary Plant

The binary plant has a heat exchanger between the well fluid and a secondary fluid in the turbine cycle (see Figure 2). The reasons for using a binary cycle are as follows:

- The binary cycle will make greater use of the available energy from the well when the secondary fluid is properly selected.
- There is a reduction of equipment size when rejection temperatures are low.
- The secondary fluid can be clean and noncorrosive.
- The secondary fluid can be run in the superheat regime if it is desirable to do so.
- Pollution due to the brine or its dissolved gases is minimized.

We have restricted our cost comparison to an isobutane binary system. Isobutane has been proposed by Anderson (163) and others as a working fluid. Its properties are quite good at temperatures of 300-350°F. It is clear that isobutane is not an ideal cycle fluid at, say, 500°F; there is no ideal fluid which is usable over a wide range of temperatures. The isobutane system analyzed here is one which uses isobutane above the critical

point. The result is better utilization of well input enthalpy.

The binary plant is not without its disadvantages, the more important ones being:

- Heat rejection using evaporative cooling is more difficult because the make-up water for the cooling tower must come from another source. If air condensers must be used the cost goes up.
- Deep well pumping is probably required.
- The heat exchanger has a significant effect on cycle efficiency as the input enthalpy of the well fluid rises.

The last of the above is important because the log mean temperature drop across the heat exchanger between the well water and secondary fluid has been optimized for minimum power cost. (When the input well water has an enthalpy of 600 Btu/lb, the log mean temperature difference is 60 F. When the well water enthalpy drops to 300 Btu/lb, the log mean temperature difference drops to 15 F.)

c) Compound Plant (two-phase turbine combined with simple flashed-steam plant)

The primary disadvantage of the simple flashed-steam system is the fact the simple flash system does not utilize all of the available energy from the well. Better utilization of this energy is obtained when the well fluid is expanded through a two-phase turbine into the flash tank instead of isenthalpically during the simple flash process. Furthermore, the brine which lies at the bottom of the flash tank can be further expanded through a two-phase turbine to utilize even more energy from the well fluid, as shown in Figure 3.

Since an analysis of the high-pressure two-phase turbine would necessitate an arbitrary choice of the input fluid conditions, which are not considered in this paper, the system shown in Figure 3 is based on isenthalpic expansion into the flash tank. The flash-tank operating pressures are the same as those used in the simple flashed-steam case; the flash-tank brine is expanded through a two-phase turbine to the condenser pressure.

The advantages of the compound system shown in Figure 3 are:

- Improved efficiency over the simple flash system for a wide range of well-water input enthalpies.
- Relatively simple plant components (no well-water heat exchangers).
- Evaporative cooling which can be used in desert areas because the condensate water is fed into the cooling tower.

Since the system shown in Figure 3 is not optimized for flash-tank pressure, this treatment of the system gives low values of efficiency.

Two types of turbines have been considered for two-phase use: the impulse turbine (such as a Pelton wheel or Francis turbine) and the reaction turbine (gas turbine, or screw converter). The impulse turbine is commonly used in the hydroelectric power industry; the reaction turbine is most often used with gases. With the exception of the screw-converter, the second type is not suitable for two-phase geothermal fluids. The screw-type converter is promising but expensive. The Pelton turbine and Francis-type turbine may be attractive for geothermal use.

The primary difficulty with the system shown in Figure 3 is that all of the heat rejected from the system is rejected through the condenser. The cost of this extra condenser can be more than the worth of the extra power generated by the system.

Cost Estimating Procedure

Costs are given in 1973 dollars and for most of the major components, are based on the best available information. In some cases, assumptions concerning cost are made and are so stated.

The steam turbine generator units are assumed to operate at a turbine efficiency of 85% with saturated steam at the inlet. The installed cost of the turbine and generators is $120/kW when the inlet pressure is 100 psia or above, $130/kW when the inlet pressure is between 25 and 100 psia, and $140/kW when the inlet pressure is 25 psia or below.

The projected cost of the isobutane turbine, which is assumed to be 85% efficient, is $120/kW. The cost of the isobutane in the binary system is included in the turbine cost.

We investigated two-phase expanders. We have assumed they take saturated liquid at the inlet and are 70% efficient. Impulse turbines were assumed. Their cost, including a steam expansion box and generator, was assumed to be $120/kW.

The weight of flash tanks was determined by using an approximate formula based on Section VII of the ASME Boiler and Pressure Vessel Code. The diameter and interior configuration of the flash tank was fixed. The flash tank length was determined by the mass flow rate, and the tank thickness was determined by the pressure. The cost of flash tanks, piping, and installation was $2.00 per pound.

Pumps, which make up only a small part of the system cost, are assumed to be 70% efficient. The cost of water pumps is $200/kW installed including the motor. The isobutane pump which runs off the turbine costs $120/kW.

The heat exchanger between the primary and secondary fluid in the binary system is assumed to have a U of 200 Btu hr^{-1} ft^{-2} F^{-1} and to cost $5.00 per ft^2. The log mean temperature drop is optimized for minimum cost. The low cost is based on using an iron heat exchanger. Since most geothermal water is nearly oxygen free, it is quite possible that iron heat exchangers can be used.

Two heat-rejection schemes were investigated. The air used in both cases is assumed to have a dry bulb temperature of 100°F and a wet bulb temperature of 70°F (the air over Northern California or Nevada is above these temperatures only 1% of the time). We assumed that an evaporative cooler (a cooling tower and condenser) would operate at a heat-rejection temperature of 120°F and the dry air condenser at 160°F.

Two kinds of evaporatively cooled condensers are considered. A direct contact condenser connected to an ordinary cooling tower is assumed for the simple flash and compound cycles. The condenser for the binary system is assumed to be built into the cooling tower base. The cost of both types of evaporative coolers is assumed to be $10/kW rejected. The fan power required to run the cooling tower is 1 kW for each MW of power rejected.

The sizing and cost of air condensers is widely reported in the literature. The cost estimate given here is based on a forced draft cooler with

three tube rows. A heat transfer coefficient, based on the bare tube area, of 120 Btu hr^{-1} ft^{-2} $°F^{-1}$ is assumed. The real finned tube area is 17 times the bare tube area. The estimated cost of the air condenser including installation and fan is $13/kW rejected. This cost is based on a cost of $12/$ft^2$ (bare tube area) including installation and fan. The fan power required is 16.4 kW per MW rejected, based on an assumed 67 ft^2 (bare tube area) per kW of fan power.

The cost of site preparation (roads, fences, etc.) and buildings is assumed to be 15% of the sum of the cost of the power generation facilities (flash tank, heat exchangers, turbines, condensers, etc.). The interest during construction is assumed to be 10% of the power generation facilities plus site improvement. The cost of engineering development and administration (EDIA) is 10% of the construction and improvement cost including interest. A 15% contingency factor is added.

The cost of operation includes capitalization (7% over 30 years); maintenance and insurance, which is 4.25% per year of the gross capital cost; delivery of the geothermal fluid from the ground at $0.05 per kgal; brine disposal and re-injection at $0.05 per kgal; and a labor plus miscellaneous cost of $35,000 per year per well. The labor usage is assumed to be 2 man-years per year per well (each well produces 10^6 lb/hr) not including maintenance. The cost of labor is $15,000 per man-year. A $5,000 per year miscellaneous cost is added.

The costs not considered here include land acquisition (many geothermal sites in the West are on federal land), recharge water importation, brine treatment, mineral recovery, and a return on the investment. The proceeds from any minerals recovered or any fresh water resulting from the process are not included.

Results of the Economic Study

The capital cost, unit energy cost, and the system efficiency were calculated for each of the three simplified systems, with well waters which have input enthalpies of 300, 400, 500, and 600 Btu/lb. These calculations were done with an evaporative cooling heat-rejection system in which heat rejection occurred at 120°F and an aircooled condenser system in which heat is rejected at 160°F.

The first conclusions are the obvious ones. Costs are higher and efficiency is lower as one uses well waters with lower enthalpies. Heat rejection with an air condenser at 160°F results in a higher capital cost per kW and higher energy cost than if heat rejection occurs at 120°F through a cooling tower.

The most expensive system in terms of capital cost is the binary system. The least expensive is a simple flash (see Figure 4). Further investigation of the compound system may yield lower capital cost than the simple flash system.

The cost of energy per kWhr varied over the range of input enthalpies. The system which produced the cheapest energy with well waters having an input enthalpy of 300 Btu/lb was the binary system (with 120°F rejection, the compound system yields nearly the same cost). At 600 Btu/lb input enthalpy the binary (isobutane binary system) produces the most expensive energy (see Figure 5). The binary system which has the highest capital cost produces the most power at low input enthalpies. The cost associated with getting the water out of the ground and reinjected into the ground are nearly constant regardless of the well water enthalpy or the cycle rejection temperature. The greater efficiency of the binary cycle on 300 Btu/lb input water had an important effect on the cost.

Figure 6 illustrates the efficiency of the three systems as a function of well water enthalpy and rejection temperature. The relative efficiencies of the three systems is rather interesting. The isobutane binary system was most efficient with low enthalpy well waters, and least efficient with high enthalpy well waters. In all cases the compound system was more efficient than the simple flash system. The efficiency of the compound system can be further extended by making all the expansions that occur above ground go through a turbine.

Tables 1 through 17 in the Appendix present the operating characteristics and cost breakdowns for the three systems. Tables 6 and 12 show the effect of changes in the cost variables on the unit energy cost for the simple flashed-steam system and the isobutane binary system. These tables show the sensitivity of the electrical energy cost to changes of capital component cost, interest rate, and plant lifetime. The relative importance of well cost to plant cost increases for low-enthalpy geothermal fluids.

Table 1

SINGLE FLASH TANK

POWER PLANT OPERATING CONDITIONS*

Input Enthalpy (Btu/lb)	Rejection Temperature (°F)	Available Power from Well (MW)	Power Out (MW)	Pump and Fan Power (MW)	Heat Rejected through Condenser (MW)	Heat Rejected in Brine (MW)	Net Cycle Efficiency (%)
300	120	62.0	4.2	0.053	22.6	35.2	6.7
	160	50.3	3.2	0.400	22.6	24.5	5.6
400	120	91.4	8.9	0.077	46.6	35.9	9.7
	160	79.7	6.6	0.740	43.3	29.8	7.3
500	120	120.9	15.0	0.092	62.0	43.9	12.3
	160	109.2	12.0	0.952	56.3	40.9	9.8
600	120	150.2	22.7	0.106	77.6	49.9	15.0
	160	138.5	18.7	1.198	71.2	49.0	12.6

*10^6 lbs per hour of fluid out of the well.

Table 2

SINGLE FLASH TANK

CAPITAL COST SUMMARY SHEET

Input Enthalpy (Btu/lb)	Rejection Temperature (°F)	CAPITAL COST 10^3 $					
		Turbine	Flash Tank	Cooling Condenser	Pumps	Bldg. Site Preparation	Subtotal
300	120	590	34	227	6	128	985
	160	420	34	294	6	114	868
400	120	1160	34	466	6	250	1916
	160	860	34	563	6	223	1686
500	120	1950	36	620	6	392	3004
	160	1440	34	732	6	343	2555
600	120	2720	49	776	6	533	4084
	160	2240	56	925	6	507	3734

Table 3

SINGLE FLASH TANK

TOTAL CAPITAL COST AND CAPITAL COST PER KW

Input Enthalpy (Btu/lb)	Rejection Temperature (°F)	CAPITAL COST 10^3 $			Net Power (kW)	Capital Cost per kW ($)
		Subtotal	Interest during Construction EDIA & Contingency	Total Capital Cost		
300	120	985	386	1371	4150	330
	160	868	340	1208	2800	431
400	120	1916	750	2666	8820	302
	160	1686	660	2346	5860	400
500	120	3004	1176	4180	14910	280
	160	2555	1000	3555	11050	321
600	120	4084	1599	5683	22600	251
	160	3734	1462	5196	17500	297

Table 4

SINGLE FLASH TANK

ANNUAL COST SUMMARY SHEET

Input Enthalpy (Btu/lb)	Rejection Temperature (°F)	COMPONENT COST 10^3 $					Total Annual Cost ($10^3$$)
		Capitalization	Maintenance & Insurance	Geothermal Brine	Brine Disposal	Labor & Misc.	
300	120	111	58	55	49	35	308
	160	98	51	55	49	35	288
400	120	215	103	55	45	35	453
	160	190	100	55	45	35	425
500	120	337	178	55	41	35	646
	160	287	151	55	42	35	570
600	120	470	241	55	37	35	838
	160	420	221	55	38	35	769

Table 5

SINGLE FLASH TANK

ANNUAL OPERATING COST AND ENERGY COST

Input Enthalpy (Btu/lb)	Rejection Temperature (°F)	Total Annual Cost (10^3 $)	Net Power Out (kW)	Annual Electrical Energy Output (10^8 kW hr)	Energy Cost (mills/kWhr)
300	120	308	4150	0.327	9.42
	160	288	2800	0.225	12.77
400	120	453	8820	0.694	6.52
	160	425	5860	0.461	9.21
500	120	646	14910	1.117	5.51
	160	570	11050	0.869	6.56
600	120	838	22600	1.758	4.77
	160	769	17500	1.377	5.59

Table 6

SINGLE FLASH TANK

SENSITIVITY TO COST CHANGES

Rejection Temperature: 120°F

Cost Variable	Assumed Cost Factor	Perturbed Value	Change in Unit Cost of Energy (%)	
			300 Btu/lb Well Fluid	600 Btu/lb Well Fluid
Steam Turbine and Generator	$120/kW*	$100/kW $140/kW*	-5.8 +5.8	-10.8 +10.8
Flash Tank	$2/lb	$1/lb $3/lb	-1.1 +1.1	-0.6 +0.6
Condenser Cooling Tower System	$10/kW	$12/kW $15/kW	+2.9 +7.3	+3.7 +9.3
Interest Rate	7%	8% 10%	+3.7 +11.1	+3.7 +17.7
Plant Lifetime	30 years	15 years 20 years	+13.0 +6.1	+20.3 +9.6
Maintenance & Insurance	4.25% of gross capital cost	3.25% 5.25%	-4.2 +4.2	-6.8 +6.8
Geothermal Fluid	$0.05/kgal	$0.025/kgal $0.10/kgal	-8.9 +17.8	-3.3 +6.5
Brine Disposal	$0.05/kgal	$0.025/kgal $0.10/kgal	-8.8 +17.5	-2.2 +4.4
Labor	$30,000/yr	$20,000/yr $40,000/yr	-3.2 +3.2	-1.4 +1.4

*For the system using 300 Btu/lb well water the assumed cost factor is $130/kW and the perturbed values are $110/kW and $150/kW.

Table 7

ISOBUTANE BINARY SYSTEM

POWER PLANT OPERATING CHARACTERISTICS*

Input Enthalpy (Btu/lb)	Rejection Temperature (°F)	Available Power from Well (MW)	Net Power from Binary Turbine (MW)	Brine Pump and Fan Power (MW)	Heat Rejected (MW)		Net Cycle Efficiency (%)
					from Condenser	in Brine	
300	120	62.0	7.52	0.052	46.4	8.1	12.1
	160	50.3	5.35	0.610	36.8	8.1	9.4
400	120	91.4	11.29	0.074	67.5	12.6	12.3
	160	79.7	7.97	0.975	59.1	12.6	8.8
500	120	120.9	12.85	0.093	87.1	20.9	10.6
	160	109.2	9.10	1.203	79.1	21.0	7.3
600	120	150.2	14.24	0.110	104.1	31.9	9.4
	160	138.5	10.74	1.584	96.1	31.7	6.6

*10^6 lbs per hour of fluid out of the well.

Table 8

ISOBUTANE BINARY SYSTEM

CAPITAL COST SUMMARY SHEET

Input Enthalpy (Btu/lb)	Rejection Temperature (°F)	CAPITAL COST 10^3 $					Subtotal (10^3 $)
		Heat Exchanger	Turbine + Generator	Pumps Mostly Isobutane	Condenser	Bldg. & Site Preparation	
300	120	307	989	92	464	278	2130
	160	241	719	77	478	226	1741
400	120	268	1456	101	675	375	2875
	160	228	1047	90	768	320	2453
500	120	210	1643	102	871	423	3249
	160	185	1183	90	1027	373	2858
600	120	166	1816	107	1041	470	3600
	160	150	1382	94	1250	432	3308

Table 9

ISOBUTANE BINARY SYSTEM

TOTAL CAPITAL COST AND CAPITAL COST PER KW

Input Enthalpy (Btu/lb)	Rejection Temperature (°F)	CAPITAL COST 10^3 $			Net Power (kW)	Capital Cost per kW ($)
		Subtotal	Interest during Construction EDIA & Contingency	Total Capital Cost		
300	120	2130	834	2964	7470	398
	160	1741	682	2423	4740	511
400	120	2875	1124	3999	11220	354
	160	2453	960	3413	6990	488
500	120	3249	1272	4521	12760	354
	160	2858	1118	3976	7900	503
600	120	3600	1408	5008	14130	354
	160	3308	1295	4603	9160	496

Table 10

ISOBUTANE BINARY SYSTEM

ANNUAL COST SUMMARY SHEET

Input Enthalpy (Btu/lb)	Rejection Temperature (°F)	COMPONENT ANNUAL COST (10^3 $)					Total Annual Cost ($10^3$$)
		Capitalization	Maintenance & Insurance	Geothermal Brine	Brine Disposal	Labor & Misc.	
300	120	239	126	55	55	35	510
	160	195	102	55	55	35	442
400	120	323	170	55	55	35	638
	160	276	145	55	55	35	566
500	120	366	192	55	55	35	703
	160	321	169	55	55	35	635
600	120	404	212	55	55	35	761
	160	372	196	55	55	35	713

Table 11

ISOBUTANE BINARY SYSTEM

ANNUAL OPERATING COST AND ENERGY COST

Input Enthalpy (Btu/lb)	Rejection Temperature (°F)	Total Annual Cost (10^3 $)	Net Power (kW)	Annual Electrical Energy Output (10^8 kW hr)	Energy Cost (mills/kWhr)
300	120	510	7470	0.589	8.67
	160	442	4740	0.372	11.89
400	120	638	11220	0.886	7.21
	160	566	6990	0.553	10.22
500	120	703	12760	1.008	6.96
	160	635	7900	0.624	10.18
600	120	761	14130	1.115	6.82
	160	713	9160	0.724	9.85

Table 12

ISOBUTANE BINARY SYSTEM

SENSITIVITY TO COST CHANGES

Rejection Temperature: 120°F

Cost Variable	Assumed Cost Factor	Perturbed Value	Change in Unit Cost of Energy (%)	
			300 Btu/lb Well Fluid	600 Btu/lb Well Fluid
Steam Turbine and Generator	$120/kW	$80/kW $100/kW $140/kW	-12.5 -6.3 +6.3	-17.7 -8.9 +8.9
Well Fluid Heat Exchanger	$5/ft^2	$8/ft^2 $12/ft^2	+7.1 +16.7	+2.6 +6.0
Condenser Cooling Tower System	$10/kW	$12/kW $15/kW	+3.6 +9.0	+5.4 +13.5
Interest Rate	7%	8% 10%	+4.8 +14.9	+5.4 +16.8
Plant Lifetime	30 years	15 years 20 years	+17.0 +7.9	+19.2 +9.1
Maintenance & Insurance	4.25% of gross Capital cost	3.25% 5.25%	-5.8% +5.8%	-6.6 +6.6
Geothermal Fluid	$0.05/kgal	$0.025/kgal $0.10/kgal	-5.4% +10.8%	-3.6 +7.2
Brine Disposal	$0.05/kgal	$0.025/kgal $0.10/kgal	-5.4% +10.8%	-3.6 +7.2
Labor	$30,000/yr	$20,000/yr $40,000/yr	-2.3% +2.3%	-1.5 +1.5

Table 13

SIMPLE COMPOUND SYSTEM (FLASH AND TWO-PHASE TURBINE)

POWER PLANT OPERATING CONDITIONS*

Input Enthalpy (Btu/lb)	Rejection Temperature (°F)	Available Power from Well (MW)	Power from Turbines (MW)	Pump & Fan Power (MW)	Heat Rejected Through Condenser (MW)	Heat Rejected in Brine (MW)	Cycle Efficiency (%)
300	120	62.0	5.87	0.059	56.1	-	9.4
	160	50.3	3.95	0.790	46.3	-	6.3
400	120	91.4	11.61	0.110	79.8	-	12.6
	160	79.7	8.08	1.200	71.6	-	8.7
500	120	120.9	19.20	0.132	101.7	-	15.8
	160	109.2	14.73	1.580	94.5	-	12.0
600	120	150.2	28.35	0.152	121.8	-	18.8
	160	138.5	22.69	1.930	115.8	-	15.0

*10^6 lbs per hour of fluid out of the well.

Table 14

SIMPLE COMPOUND SYSTEM (FLASH AND TWO-PHASE TURBINE)

CAPITAL COST SUMMARY SHEET

Input Enthalpy (Btu/lb)	Rejection Temperature (°F)	CAPITAL COST 10^3 $					Subtotal ($10^3$$)
		Turbines	Flash Tank	Cooling Condenser	Pumps	Bldg. & Site Preparation	
300	120	790	34	561	6	208	1599
	160	510	34	603	6	173	1326
400	120	1485	34	798	6	348	2671
	160	1038	34	932	6	302	2312
500	120	2454	34	1017	6	527	4038
	160	1768	36	1228	6	456	3494
600	120	3398	49	1218	6	700	5371
	160	2719	56	1507	6	633	4921

Table 15

SIMPLE COMPOUND SYSTEM (FLASH AND TWO-PHASE TURBINE)

TOTAL CAPITAL COST AND CAPITAL COST PER KW

Input Enthalpy (Btu/lb)	Rejection Temperature (°F)	CAPITAL COST 10^3 $			Net Power kW	Capital Cost per kW ($)
		Subtotal	Interest during Construction EDIA & Contingency	Total Capital Cost		
300	120	1599	626	2225	5810	382
	160	1326	519	1845	3160	585
400	120	2671	1045	3716	11500	323
	160	2312	904	3216	6880	460
500	120	4038	1580	5618	19070	294
	160	3494	1366	4860	13150	370
600	120	5371	2100	7471	28230	264
	160	4921	1925	6846	20790	329

Table 16

SIMPLE COMPOUND SYSTEM (FLASH AND TWO PHASE TURBINE)

ANNUAL COST SUMMARY SHEET

Input Enthalpy (Btu/lb)	Rejection Temperature (°F)	COMPONENT COST 10^3 $					Total Annual Cost ($10^3$$)
		Capitalization	Maintenance & Insurance	Geothermal Brine	Brine Disposal	Labor & Misc.	
300	120	179	96	55	30	35	395
	160	149	78	55	32	35	349
400	120	299	158	55	35	35	582
	160	269	137	55	37	35	533
500	120	452	239	55	39	35	820
	160	392	206	55	41	35	729
600	120	597	318	55	45	35	1050
	160	556	291	55	47	35	984

Table 17

SIMPLE COMPOUND SYSTEM (FLASH AND TWO PHASE TURBINE)

ANNUAL OPERATING COST AND ENERGY COST

Input Enthalpy (Btu/lb)	Rejection Temperature (°F)	Total Annual Cost (10^3 $)	Net Power Out (kW)	Annual Electrical Energy Output (10^8 kW hr)	Energy Cost (mills/kWhr)
300	120	395	5810	0.459	8.61
	160	349	3160	0.250	13.95
400	120	582	11500	0.908	6.41
	160	533	6880	0.544	9.81
500	120	820	19070	1.508	5.44
	160	729	13150	1.039	7.02
600	120	1050	28230	2.230	4.70
	160	984	20790	1.642	5.99

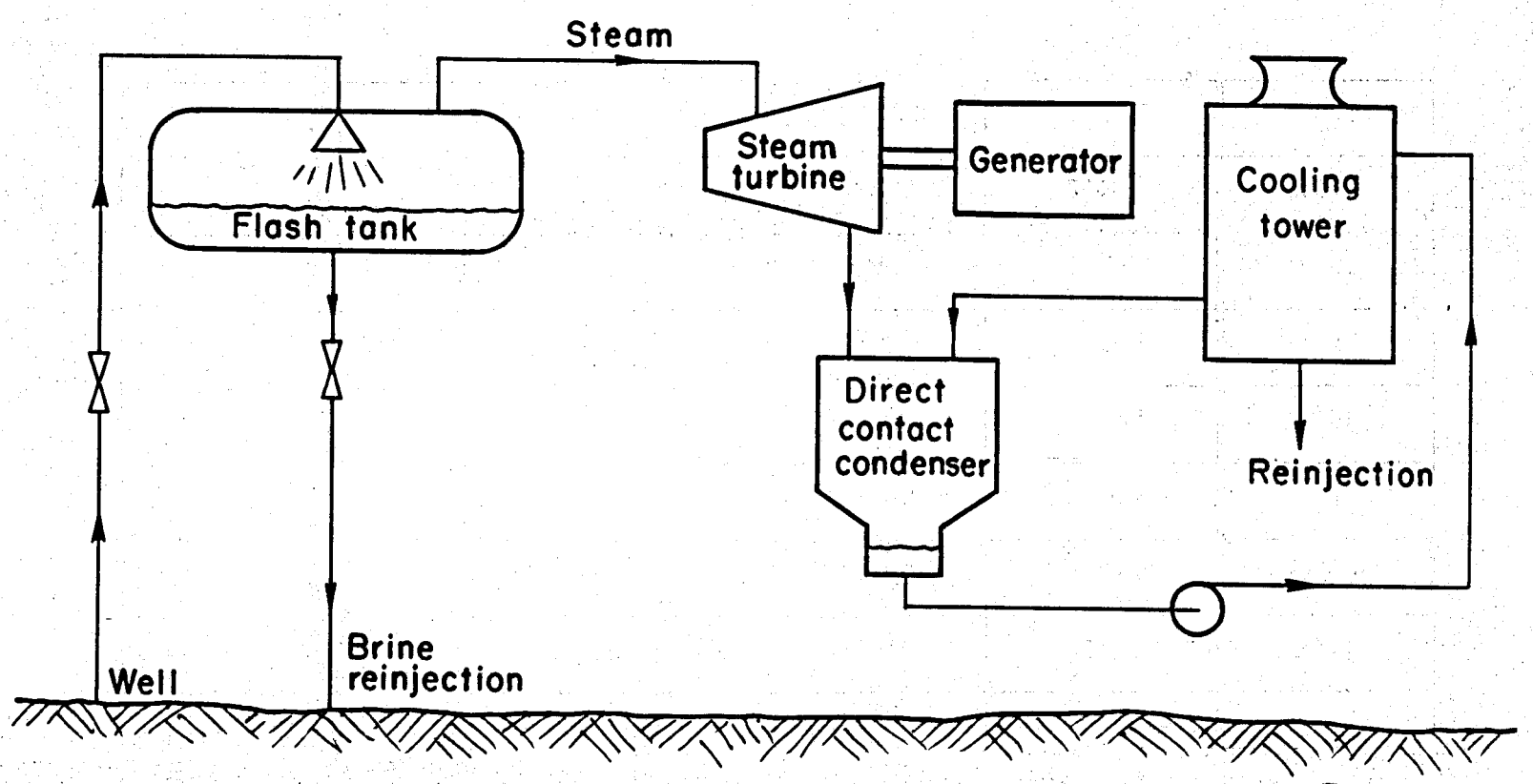

XBL737-3612

Figure 1. Simple flashed-steam cycle with evaporative heat rejection.

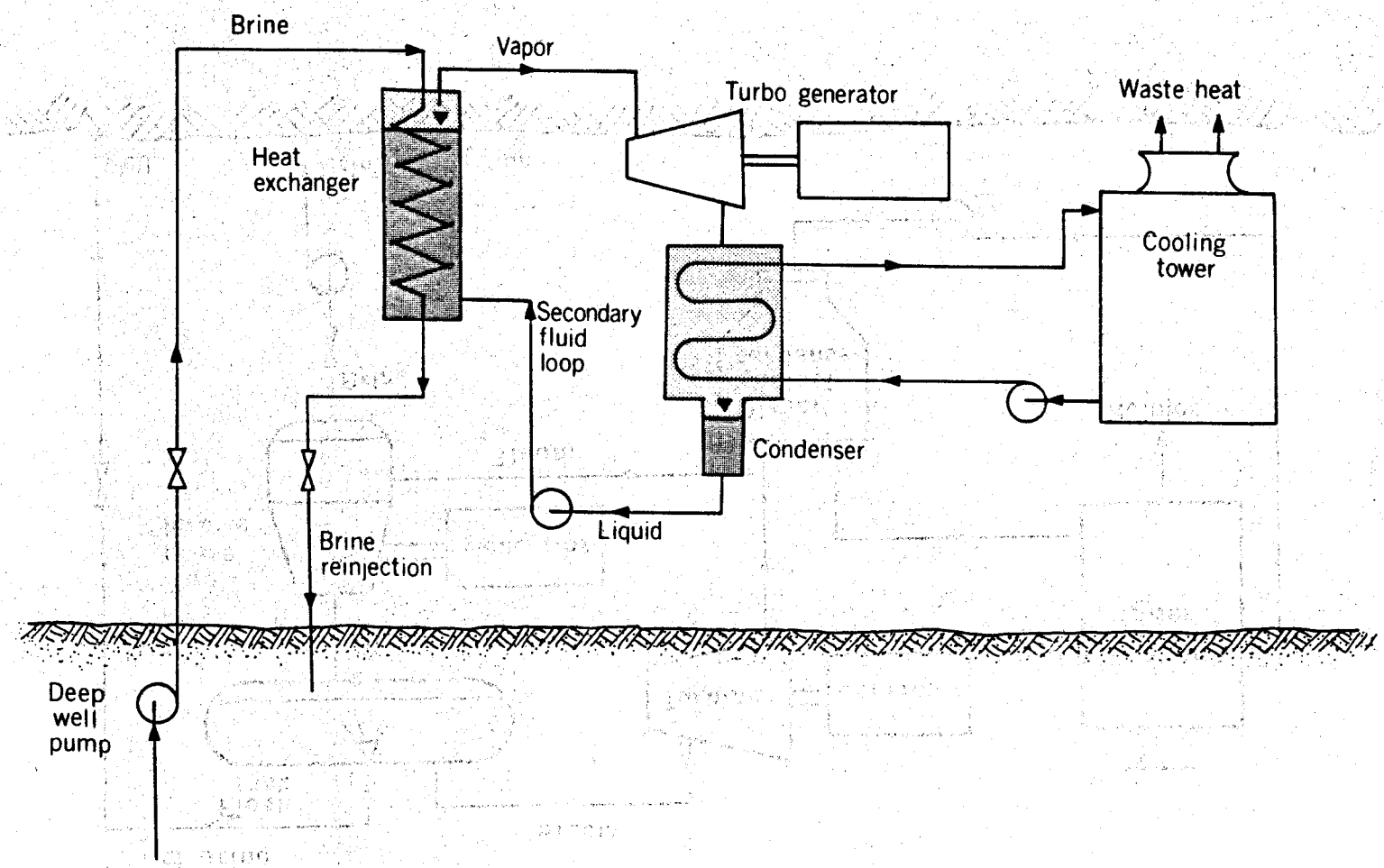

XBL 735 679

Figure 2. Simple isobutane binary cycle with evaporative cooled heat rejection.

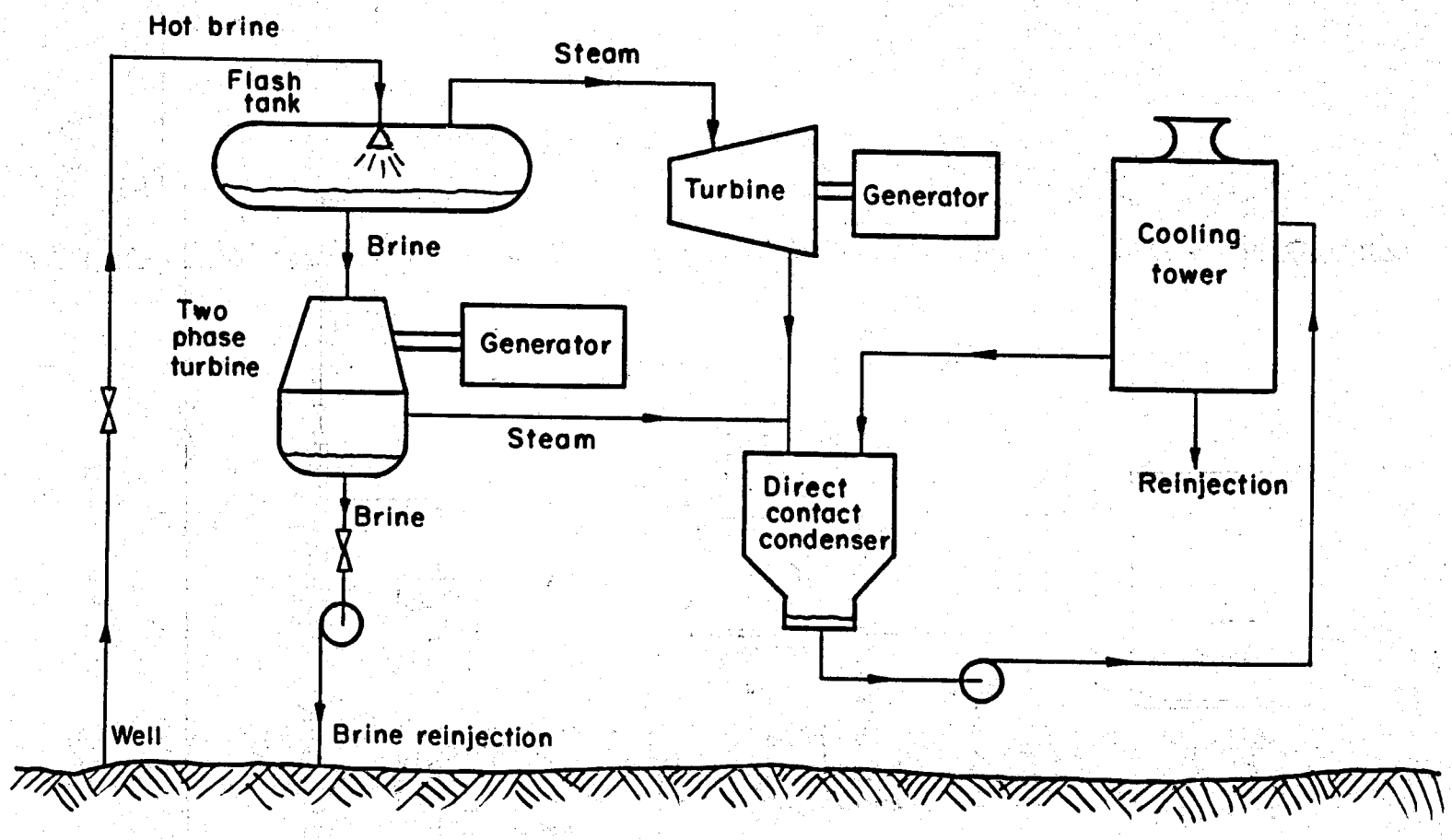

XBL 737-3611

Figure 3. Compound cycle with a two-phase turbine and flash-steam system. Evaporative heat rejection.

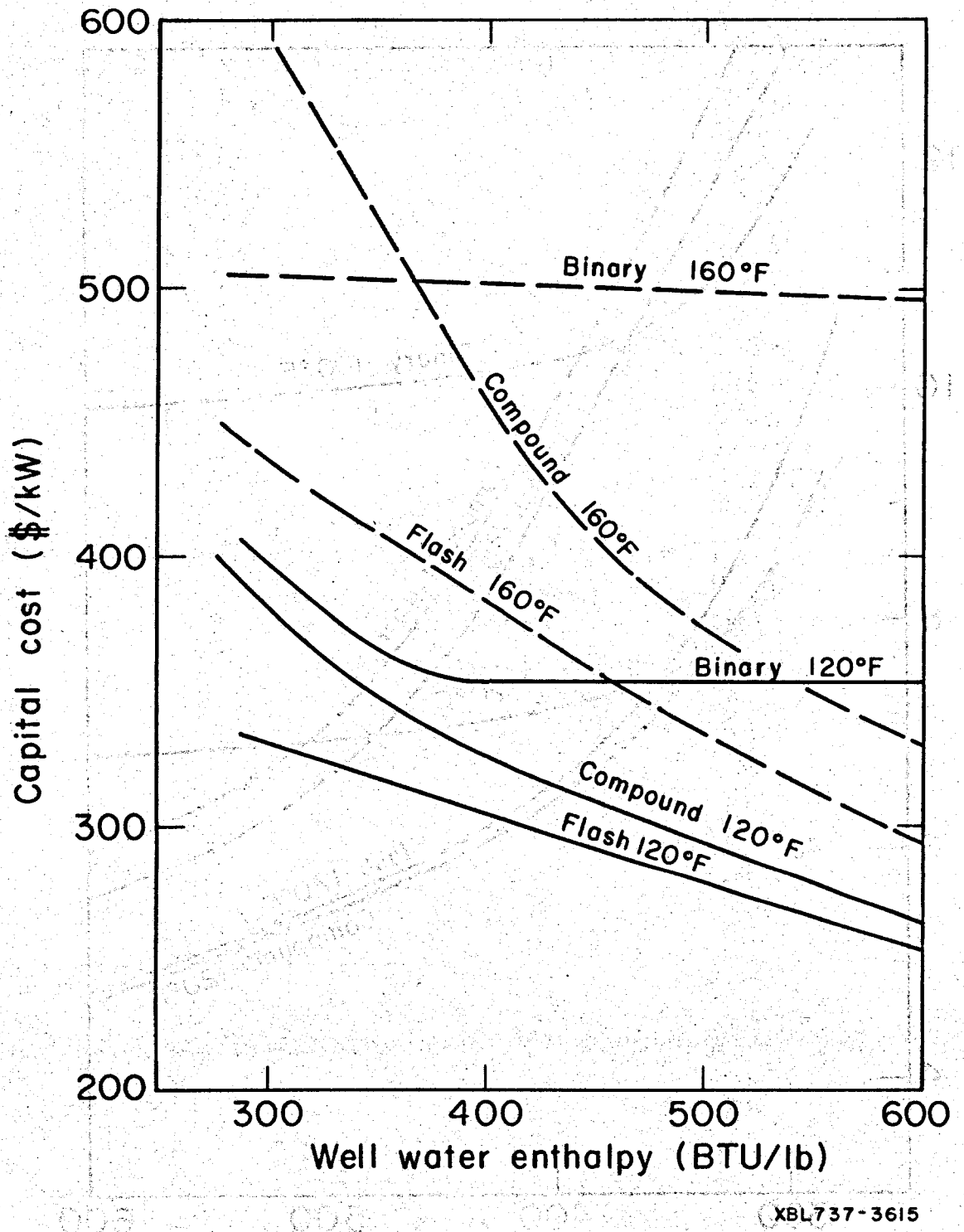

Figure 4. Power plant capital cost as a function of well water input enthalpy and heat-rejection temperature.

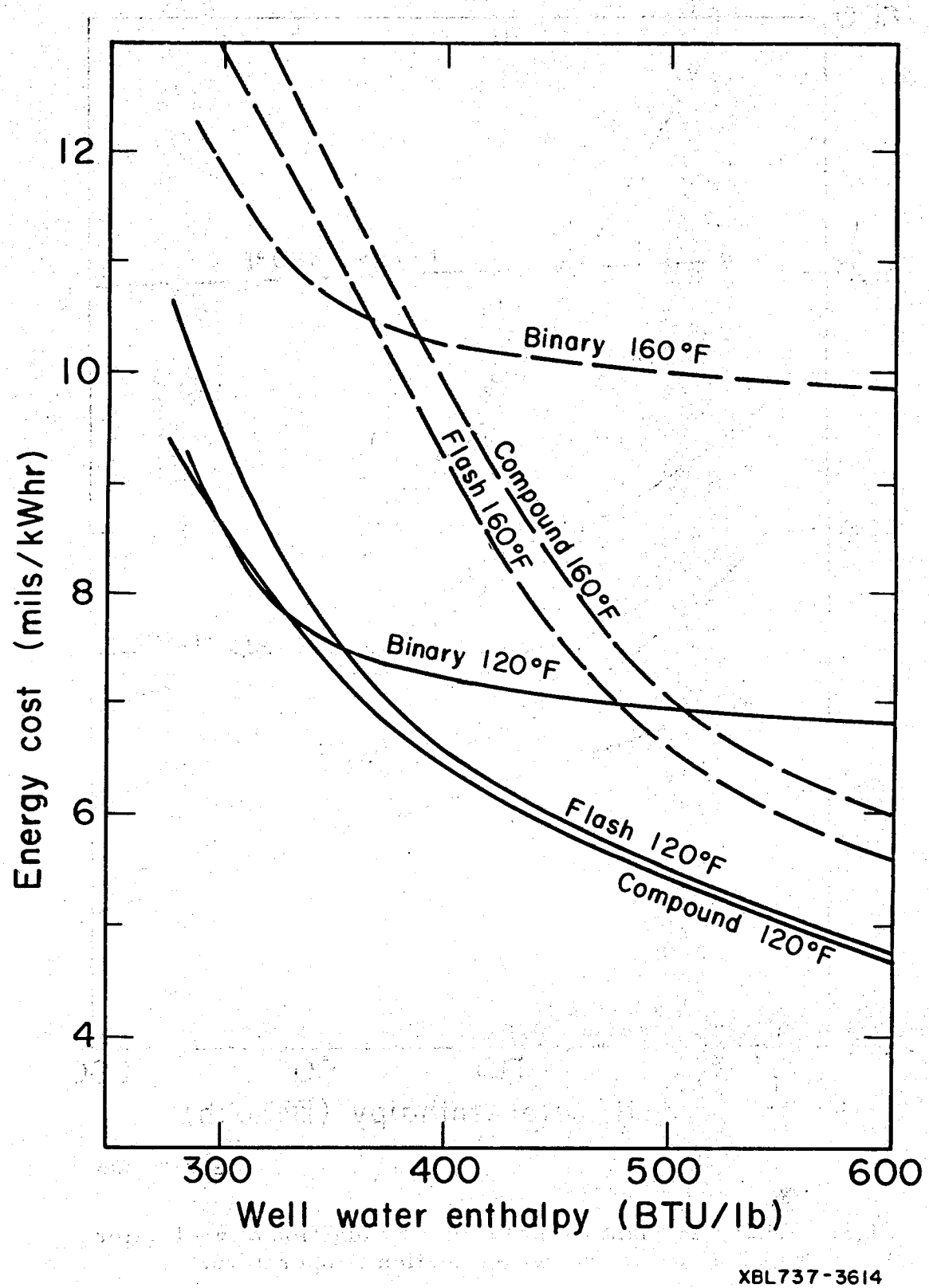

Figure 5. Electrical energy cost as a function of well water input enthalpy and heat-rejection temperature.

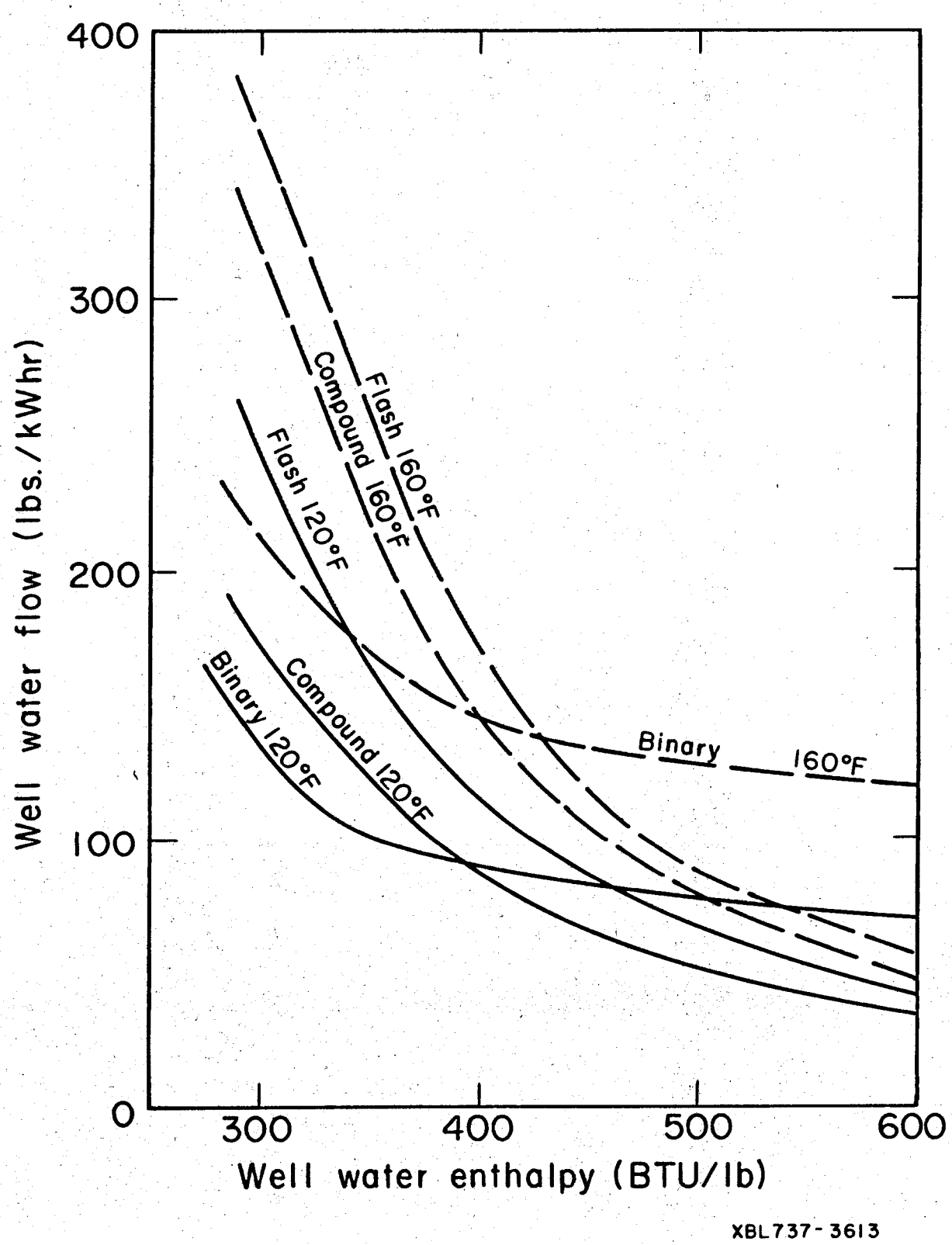

Figure 6. Well water flow rate per kW hr of power generated as a function of well water input enthalpy and heat-rejection temperature.