LA-UR-74-580

NOTICE
This report was prepared as an account of work sponsored by the United States Government. Neither the United States nor the United States Atomic Energy Commission, nor any of their employees, nor any of their contractors, subcontractors, or their employees, makes any warranty, express or implied, or assumes any legal liability or responsibility for the accuracy, completeness or usefulness of any information, apparatus, product or process disclosed, or represents that its use would not infringe privately owned rights.

Conf-740402--20

LASER FUSION POWER PLANT SYSTEMS ANALYSIS

F. T. Finch, E. A. Kern, and J. M. Williams

University of California
Los Alamos Scientific Laboratory
Los Alamos, New Mexico

ABSTRACT

A power-plant simulation program has been developed and utilized to make initial estimates of power costs and to assess the effects of variations of selected system parameters for several laser-fusion 1000 MWe reference concepts.

Parameters affecting the plant duty cycle and primary energy balance and techniques for assessing the effect of component maintenance and replacement schedules, based on variable component mean-life criteria, were included.

INTRODUCTION

A number of conceptual Laser Controlled Thermonuclear Reactor (LCTR) designs are being investigated at LASL. These designs are being evaluated with regard to potential technical feasibility and economical potential as well as to the definition of technical requirements for subsystem development. In conjunction with the engineering design effort, system studies have been initiated to develop and utilize methods to: (a) compare alternative LCTR concepts, (b) compare subsystem configurations for a given concept, and (c) investigate subsystem sensitivities to design parameter changes. The focus of the parameter trade-off and analysis studies has been on the development of a reactor plant simulation program TROFAN.

MASTER

SIMULATION PROGRAM

Given a set of performance criteria, the program TROFAN simulates the performance of a LCTR power plant system and calculates the subsystem and component design parameters necessary to meet the desired performance. It then calculates

DISTRIBUTION OF THIS DOCUMENT IS UNLIMITED

BLANK PAGE

the capital and operating costs corresponding to the subsystem and component specifications. The LCTR power plant performance is simulated by calculating primary and secondary energy and mass flows, shown schematically for a generalized LCTR plant system in Fig. 1.

The primary figure of merit used to compare the effects of parameter variations is the net power cost. The circulating power fraction or net plant efficiency may be used as secondary objective functions.

The main routine, TROFAN, provides the calculational organization and the overall plant energy and mass balances. It is designed to accomodate a large number of variable parameters, to be convenient to use, flexible and usable during development. Calculation sequences, component and subsystem specifications and output specifications can be controlled by the user.

The net power cost is obtained by simplified methodology based on that used for costing conventional and nuclear fission reactor plants. [1,2,3] Where appropriate, the conventional subsystems are scaled from corresponding subsystems in 1000 MWe fission plants, with allowances for the higher circulating power fraction in an LCTR. [4] Caution is urged in using these cost figures. They are developed to provide a weighted optimization function for evaluation of subsystem sensitivities in a LCTR power station environment and they are not intended to serve as a basis for economic comparisons with other power plants.

REFERENCE POINT

As a basis for the initial tradeoff studies, reference plant descriptions have been established for several laser fusion reactor concepts including the wetted wall [5], magnetically protected wall [6], lithium vortex (BLASCON) [7], and bare wall [8] in a nominal 1000 MWe power plant configuration. [9]

Either spherical or cylindrical shapes may be specified. Reference point configurations are based on a liquid lithium blanket-coolant design with four concentric walls (except BLASCON). The spacing and thickness of the walls are chosen to minimize the effects of hydraulic shocks and are based on dynamic

stress loading calculations for the wetted wall design. These design aspects were not varied in the parametric studies. The design criteria used in sizing the individual reactor cavities were based on the allowable prompt flux of x rays and pellet debris on the first wall, steady state heat flux through the first wall, and the integrated neutron flux on the first wall. Reference vessel specifications are listed in Table I.

For the reference plant, a centralized, e-beam controlled-electric-discharge CO_2 laser system serving multiple reactor cavities by means of a beam switching optical system was chosen (Table II). Provision may be made for other types of lasers [10] and for partially cavity-coupled or totally distributed laser systems.

The reference pellet yield was obtained from a functional relationship between incident laser energy on bare DT pellets and energy gain which was obtained by curve-fitting results from large specialized computer codes. [11] The reference pellet gain curve is linear in logarithmic coordinates. The maximum gain of 100 is obtained with 1 MJ of laser light on target. The gain produced by .1 MJ of laser light is 56. Energy output spectra are defined for x rays, neutrons, and debris.

Thermonuclear energy is deposited in the cavity wall (ablative layer where it exists), reactor structure, and in the 1 meter thick lithium blanket. Neutronic calculations indicate that a multiplication factor of 1.3 relative to the net pellet thermonuclear yield is achieved. [12] This factor is relatively insensitive to vessel size over the range of interest and is assumed to be constant in the tradeoff studies.

Unit cost information utilized by the program are summarized in Table II. These cost data are uneven at best, ranging from state-of-the-art (catalog values) to extrapolations based on small and/or experimental systems. Conventional cost categories (accounts 20, 21, 23, 24 and 25) are scaled from reference fission reactor systems with linear or "six-tenths costing rule" scaling where appropriate to compensate for the higher thermal power requirements of an equivalent LCTR.

Based on the reference concept parameters and the unit cost data, the reference reactor cost summary in Table III was developed. The main elements that make up the net power cost, both capital and operating are indicated. The reactor plant subsystem costs in Table III include primary and intermediate loop components and heat exchangers as well as the required number of reactor vessels. The piping and heat exchange components are costed at 57 million dollars for the reference case. The laser system cost breakdown includes 31 million dollars for power supplies, 6.5 million dollars for optics and the balance in amplifier, gas handling and control equipment. The fuel system was divided into three main parts: a tritium-lithium separation plant, a tritium purification plant, and a DT pellet fabrication and injection system. Cryogenic, cavity-coupled pellet injectors were postulated for the reference systems.

PARAMETRIC VARIATIONS

All of the reference concepts are highly sensitive to the reactor cavity pulse rate because the number of reactor cavities required in the plant is determined primarily by the pulse rate per cavity. Figure 2 shows that power costs are minimized by operation at the highest possible pulse rate.

The sensitivity of power cost to net pellet gain is shown in Fig. 3, all other parameters being held constant. A pellet gain less than ~ 50 gives uneconomic operation in the reference plant environment chosen for this study.

The effect of laser electrical-to-light efficiency on net power cost is shown in Fig. 4. Laser efficiencies on the order of 4% or greater will be required for economic operation in the type of plant postulated in these reference concepts.

The relative sensitivities of the pellet gain, laser and electrical generating plant efficiencies are indicated in Fig. 5 for the wetted wall concept showing that development of pellets with higher gain and lasers with higher efficiency would have greater relative effect than improvements in electrical generating efficiency. These parameters, together with the beam transport and

coupling efficiency and the auxiliary power requirements, determine the net plant efficiency.

The cost minima for the wetted wall concept, shown in Fig. 6, shifts to favor larger reactor vessels with increasing replacement cost. A replacement cost factor, which is multiplied by the material costs of the first and inner structural walls to give net replacement costs, was varied from 1.2 (reference case) to 2.5.

The limiting neutron exposure on the first wall was set at 5×10^{22} neutrons/cm^2 in the reference case. Figure 7 shows the sensitivity of power cost to variations in this parameter.

The reference calculations assumed that the time required for vessel removal and replacement (primarily affecting plant duty factor) is 5 days. This is optimistic for liquid metal systems. The reference time requirement for vessel maintenance, including necessary component replacement is 30 days. The power cost increases about 0.6 mills/kWh for the wetted wall concept when the replacement and maintenance times are increased to 30 and 180 days, respectively.

The lifetime that is assumed for the laser power supply capacitors has a strong effect on the economic viability of a laser-fusion power plant. The reference point calculations assumed that capacitors with 5-year lifetimes at a daily pulse rate of $\sim 2.5 \times 10^6$ pulses could be projected. Design and cost specifications for long lasting capacitors are uncertain. However, assuming initial costs of \$1.50/J installed and \$0.20/J for reconditioning with sufficient redundancy to eliminate down time for replacement and with seven days allowed for reconditioning a capacitor unit, capacitor life-times of 30-50 days or more are necessary for operation with power costs in the range of 20 mills/kWh or below.

The effect of doubling the overall laser system cost resulted in a 1.6 mill/kWh increase in power cost for the reference wetted wall plant.

A ten-fold increase in unit pellet cost, from the reference 2 mills/pellet to 20 mills/pellet, produced a 2 mill/kWh increase in power cost.

SUMMARY AND CONCLUSIONS

The confidence with which one can interpret these preliminary results is limited because of the uncertainties in design and engineering evaluations of the reference concepts. Even with these limitations, however, these system studies have been useful in evaluating the relative incentives for advances in various component and subsystem technologies.

The requirements for economic central power stations based on the reference laser-fusion plants postulated in this analysis include: (a) pellets with gains of 50 or more, (b) laser efficiencies greater than 4%, (c) reactor first wall materials capable of withstanding neutron exposures on the order of 10^{22} neutrons/cm^2 or more, and (d) laser power supply capacitors that last 40 days (10^8 pulses) or more.

Beyond the minimum requirements technological incentives are high to increase pellet energy gain, to increase laser efficiency, to maximize pellet microexplosion repetition rate and to minimize component replacement requirements. The high incentive for energy gain improvements may make hybrid fusion-fission concepts, with depleted uranium or thorium in the blanket, attractive.

The development of the TROFAN code will be continued and expanded both with respect to engineering and physical detail and to the number and scope of parameters to be investigated for the reference concepts and their variations.

REFERENCES

1. Peters, M. S., and Timmerhares, K. D., "Plant Design and Economics for Chemical Engineers," 2nd Edition, McGraw-Hill (1968).

2. El-Wakil, M. M., "Nuclear Energy Conversion," Intext Educational Publishers, San Francisco (1971).

3. Bowers, H. I., et al, "Concept - Computerized Conceptual Cost Estimates for Steam-Electric Power Plants, Phase 2 Users Manual," Oak Ridge National Laboratory Report ORNL-4809, April, 1973.

4. "1000-MWe Central Station Power Plants Investment Cost Study," Vol., I and II, WASH-1230, United Engineers and Contractors, Inc., 1972.

5. L. A. Booth, (compiler), "Central Station Power Generation by Laser-Driven Fusion," Los Alamos Scientific Laboratory Report, LA-4858-MS, Vol. I, February 1972.

6. Frank, T.; Freiwald, D., Merson, T., Devaney, J., "A Laser Fusion Reactor Concept Utilizing Magnetic Fields for Cavity Wall Protection," Los Alamos Scientific Laboratory, Presented at 1st Topical Meeting on the Technology of Controlled Nuclear Fusion, San Diego California, April 16-18, 1974.

7. Fraas, A. P., "The BLASCON - an Exploding Pellet Fusion Reactor", Oak Ridge National Laboratory Report, TM-3231, July 1971.

8. Williams, J. M., Finch, F. T., Frank, T. G., and Gilbert, J. S., "Engineering Design Considerations for Laser Controlled Thermonuclear Reactors," Los Alamos Scientific Laboratory, Presented at 5th Symposium on Engineering Problems of Fusion Research, Princeton, NJ, November 6-9, 1973.

9. Williams, J. M., Merson, T., Finch, F. T., Schilling, F. P., and Frank, T. G., "A Conceptual Laser Controlled Thermonuclear Reactor Power Plant," Los Alamos Scientific Laboratory, Presented at 1st Topical Meeting on the Technology of Controlled Nuclear Fusion, San Diego, CA, April 16-18, 1974.

10. Gilbert, J. S., Stratton, T. F., and Jensen, R. J., "Potential Lasers for LCTR Applications," Los Alamos Scientific Laboratory, Presented at 1st Topical Meeting on the Technology of Controlled Nuclear Fusion, San Diego, CA, April 16-18, 1974.

11. Clarke, J. S., Fisher, H. N., and Mason, R. J., "Laser-Driven Implosion of Spherical DT Targets to Thermonuclear Burn Conditions," Phys. Rev. Lett., Vol. 30, p. 89, January 15, 1973.

12. Frank, T., Dudziak, D., and Heck, E., "Some Neutronics Aspects of Laser-Fusion Reactors," Los Alamos Scientific Laboratory, Presented at 1st Topical Meeting on the Technology of Controlled Nuclear Fusion, San Diego, CA, April 16-18, 1974.

TABLE I

NOMINAL REFERENCE SYSTEM PARAMETERS, 1000 MWe LCTR

	Wetted Wall	Mag. Prot. Wall	BLASCON	Bare Wall
Thermal Power Per Cavity (MWt)	156	936	13	936
Net Electrical Power per Cavity (MWe)	42	250	<4	250
Cavity Pulse Rate (s^{-1})	1.2	7.2	.1	7.2
Number of Reactor Cavities	24	4	283	4
Reactor Shape	Sphere	Cylinder	Sphere	Sphere
Cavity Radius (m)	1.7	2.5	---	9.7
Lithium Blanket Thickness (m)	1.0	1.0	1.0	1.0
Reactor outer radius (m)	2.9	3.7	1.1	10.9
Vessel Walls, Thickness (cm)				
First Wall	1.0	1.0	---	1.0
Inner Structural	5.0	5.0	---	5.0
Outer Structural	10.0	10.0	---	10.0
Outer Envelope	2.5	2.5	25.4	2.5
Reactor Materials				
First Wall	Nb	Nb	---	Nb/C lined
Structure	SS	SS	SS	SS
Ablative Layer	Li	--	--	--
Ablative Layer Thickness (mm)	1	--	--	--
First Wall Flux Limit (J/cm^2)				
X-rays	2.7	1.2	--	--
X-rays and Debris	--	--	--	2.0
Neutron Exposure Limit (J/cm^2)	$5x10^{22}$	$5x10^{22}$	--	$5x10^{22}$
Number of Laser Beam Ports	8	8	1	8

BLANK PAGE

TABLE II

REFERENCE PARAMETERS

Laser System	
Type: CO_2, E-beam pumped	16
Energy per laser per pulse (MJ)	0.135
Pulse repetition rate (s^{-1})	<50 (nominal 40)
Efficiency (multi-band, multi-line)	7%
Beam Transport System	
Number of mirrors per laser beam	7*, 9
Number of windows per laser beam	1
Mirror reflectivity	0.995
Window transmitivity	0.99
Transmitivity of reactor environment	0.98
Maximum flux on windows (J/cm^2)	3
Maximum flux on mirrors (J/cm^2)	10
Diameter of final optical surface (m)	3.62*, 1.27
Net beam transport efficiency	~93%
Unit Cost Data	
Materials ($/kg)	
Li	9
Nb	60
Stainless Steel	15
Iron	2
Graphite	3
Optical elements ($/$cm^2$)	
Mirrors	1.5, 5.0
Windows	1.0, 5.0
Power supplies ($/J)	1.5

* Blascon

TABLE III

REFERENCE REACTOR COST SUMMARY

	Wetted Wall	Mag. Prot. Wall	BLASCON	Bare Wall
I. System Characteristics				
Net Power (MWe)	1000	1000	1000	1000
Number of Reactor Vessels	24	4	283	4
Pulse Rate (s^{-1})	1.2	7.2	.1	7.2
Net Plant Efficiency (%)	27	27	27	27
Circulating Power Fraction	.33	.33	.33	.33
II. Capital Costs (10^6\$)				
Reactor System	143	100	171	292
Laser System	79	79	79	79
Beam Transport	29	6	53	6
Fuel System	19	12	30	33
Magnetic System	—	9	—	—
Generating Plant	100	100	100	100
Plant Structure, electrical system, other	166	165	166	166
Total	536	472	598	675
III. Power Costs (mills/kWhe)				
Capital Amortization	10.8	9.6	12.1	13.7
Fuel	.2	.2	.2	.2
Labor and Maintenance	3.2	2.3	.6	4.2
Net Power Cost	14.3	12.1	12.9	18.1

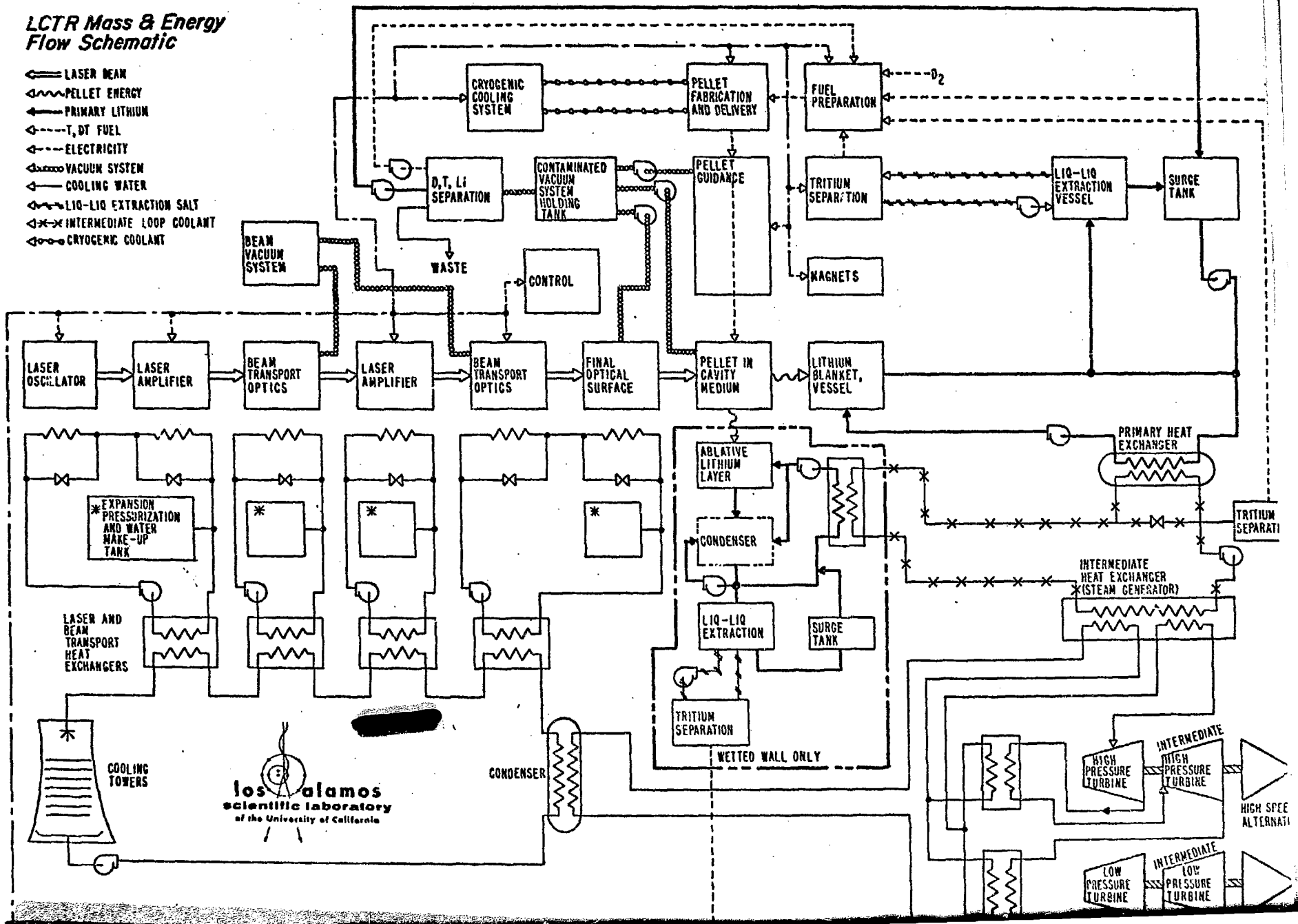
LCTR Mass & Energy Flow Schematic
LASER BEAM
PELLET ENERGY
PRIMARY LITHIUM
T, DT FUEL
ELECTRICITY
VACUUM SYSTEM
COOLING WATER
LIQ-LIQ EXTRACTION SALT
INTERMEDIATE LOOP COOLANT
CRYOGENIC COOLANT
CRYOGENIC COOLING SYSTEM
PELLET FABRICATION AND DELIVERY
FUEL PREPARATION
D_2
D,T, Li SEPARATION
CONTAMINATED VACUUM SYSTEM HOLDING TANK
PELLET GUIDANCE
TRITIUM SEPARATION
LIQ-LIQ EXTRACTION VESSEL
SURGE TANK
BEAM VACUUM SYSTEM
WASTE
CONTROL
MAGNETS
LASER OSCILLATOR
LASER AMPLIFIER
BEAM TRANSPORT OPTICS
LASER AMPLIFIER
BEAM TRANSPORT OPTICS
FINAL OPTICAL SURFACE
PELLET IN CAVITY MEDIUM
LITHIUM BLANKET, VESSEL
PRIMARY HEAT EXCHANGER
ABLATIVE LITHIUM LAYER
CONDENSER
EXPANSION PRESSURIZATION AND WATER MAKE-UP TANK
TRITIUM SEPARATI
INTERMEDIATE HEAT EXCHANGER (STEAM GENERATOR)
LASER AND BEAM TRANSPORT HEAT EXCHANGERS
LIQ-LIQ EXTRACTION
SURGE TANK
TRITIUM SEPARATION
WETTED WALL ONLY
COOLING TOWERS
CONDENSER
los alamos
scientific laboratory
of the University of California
HIGH PRESSURE TURBINE
INTERMEDIATE HIGH PRESSURE TURBINE
HIGH SPEE ALTERNATI
LOW PRESSURE TURBINE
INTERMEDIATE LOW PRESSURE TURBINE

BLANK PAGE

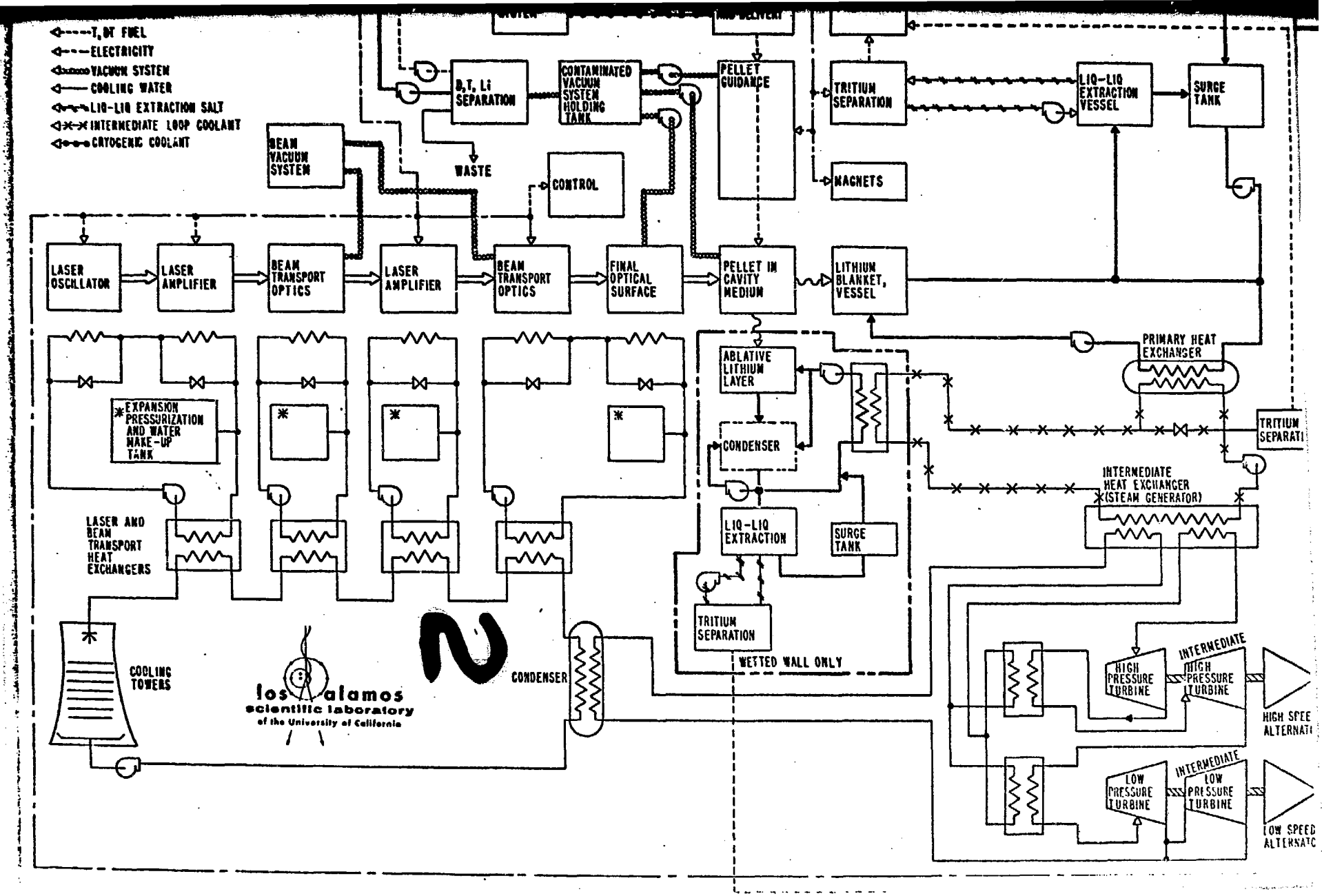
T, DT FUEL
ELECTRICITY
VACUUM SYSTEM
COOLING WATER
LIQ-LIQ EXTRACTION SALT
INTERMEDIATE LOOP COOLANT
CRYOGENIC COOLANT
D,T, Li SEPARATION
CONTAMINATED VACUUM SYSTEM HOLDING TANK
PELLET GUIDANCE
TRITIUM SEPARATION
LIQ-LIQ EXTRACTION VESSEL
SURGE TANK
BEAM VACUUM SYSTEM
WASTE
CONTROL
MAGNETS
LASER OSCILLATOR
LASER AMPLIFIER
BEAM TRANSPORT OPTICS
LASER AMPLIFIER
BEAM TRANSPORT OPTICS
FINAL OPTICAL SURFACE
PELLET IN CAVITY MEDIUM
LITHIUM BLANKET, VESSEL
PRIMARY HEAT EXCHANGER
ABLATIVE LITHIUM LAYER
CONDENSER
EXPANSION PRESSURIZATION AND WATER MAKE-UP TANK
LIQ-LIQ EXTRACTION
SURGE TANK
TRITIUM SEPARATION
WETTED WALL ONLY
INTERMEDIATE HEAT EXCHANGER (STEAM GENERATOR)
LASER AND BEAM TRANSPORT HEAT EXCHANGERS
COOLING TOWERS
CONDENSER
los alamos scientific laboratory of the University of California
HIGH PRESSURE TURBINE
INTERMEDIATE HIGH PRESSURE TURBINE
LOW PRESSURE TURBINE
INTERMEDIATE LOW PRESSURE TURBINE

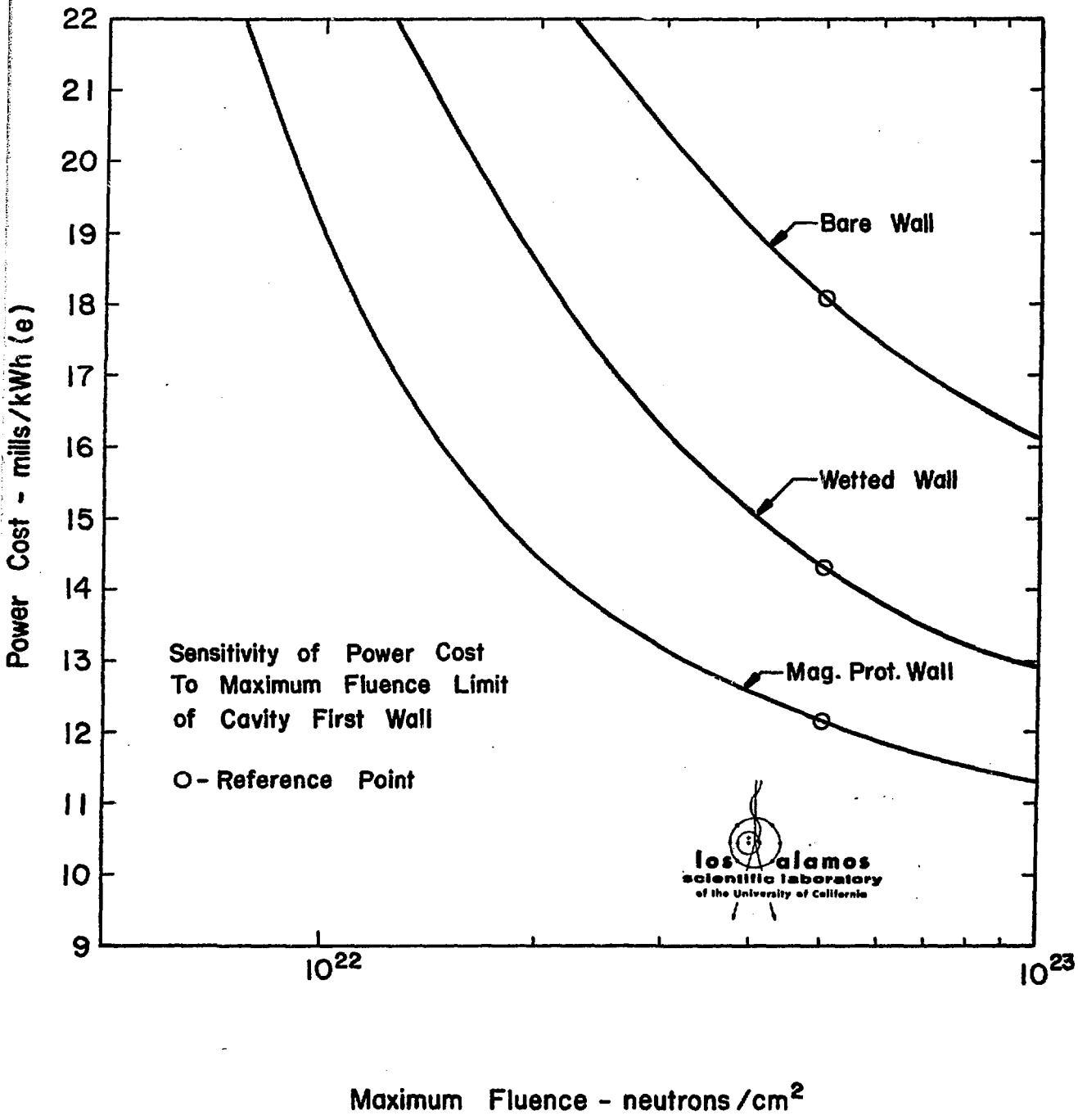
Power Cost - mills/kWh (e)
22
21
20
19
18
17
16
15
14
13
12
11
10
9
Bare Wall
Wetted Wall
Mag. Prot. Wall
Sensitivity of Power Cost
To Maximum Fluence Limit
of Cavity First Wall
O - Reference Point
los alamos
scientific laboratory
of the University of California
10^{22}
10^{23}
Maximum Fluence - neutrons/cm^2

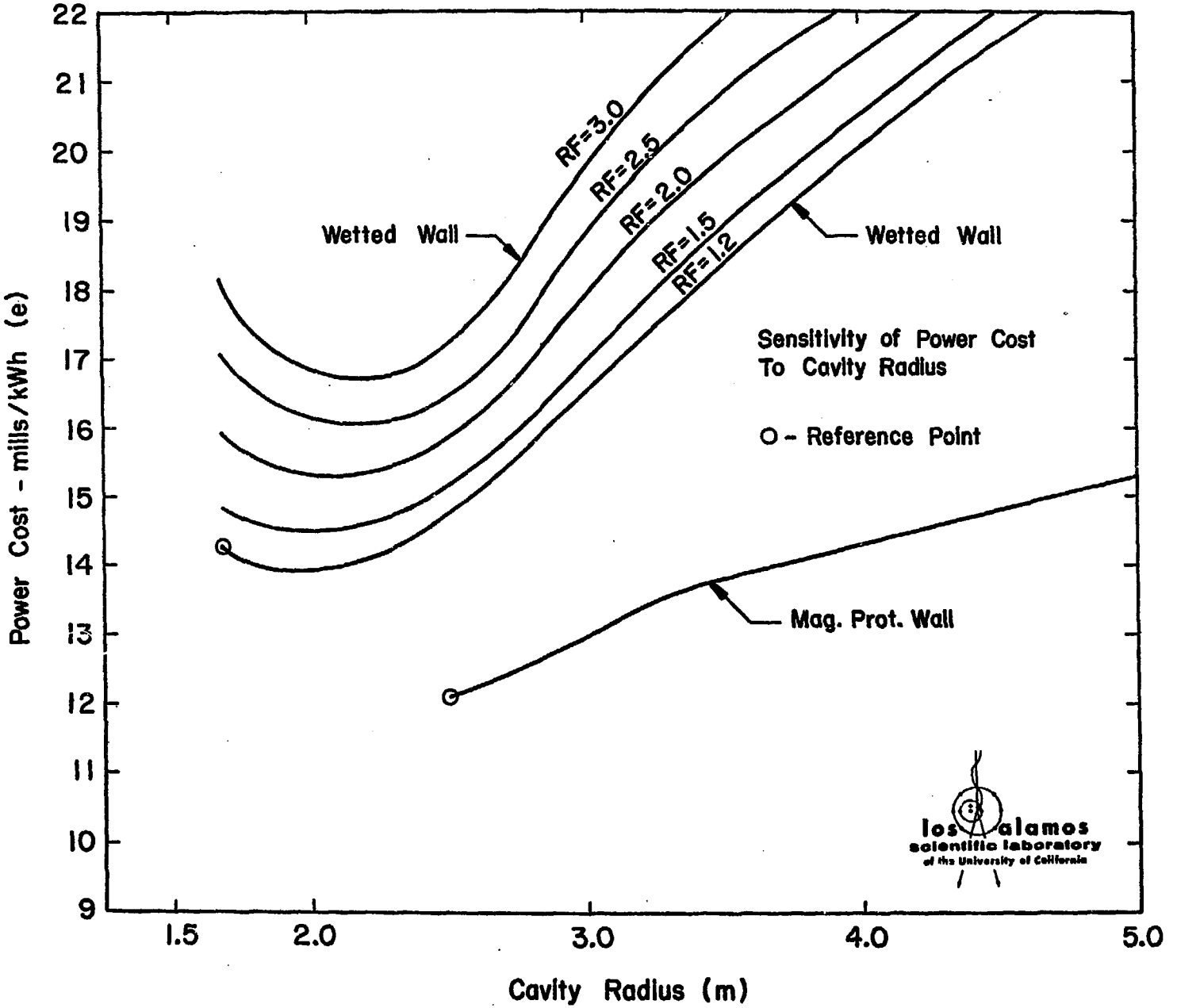
Power Cost - mills/kWh (e)
Cavity Radius (m)
22
21
20
19
18
17
16
15
14
13
12
11
10
9
1.5
2.0
3.0
4.0
5.0
RF=3.0
RF=2.5
RF=2.0
RF=1.5
RF=1.2
Wetted Wall
Wetted Wall
Sensitivity of Power Cost
To Cavity Radius
O - Reference Point
Mag. Prot. Wall
los alamos
scientific laboratory
of the University of California

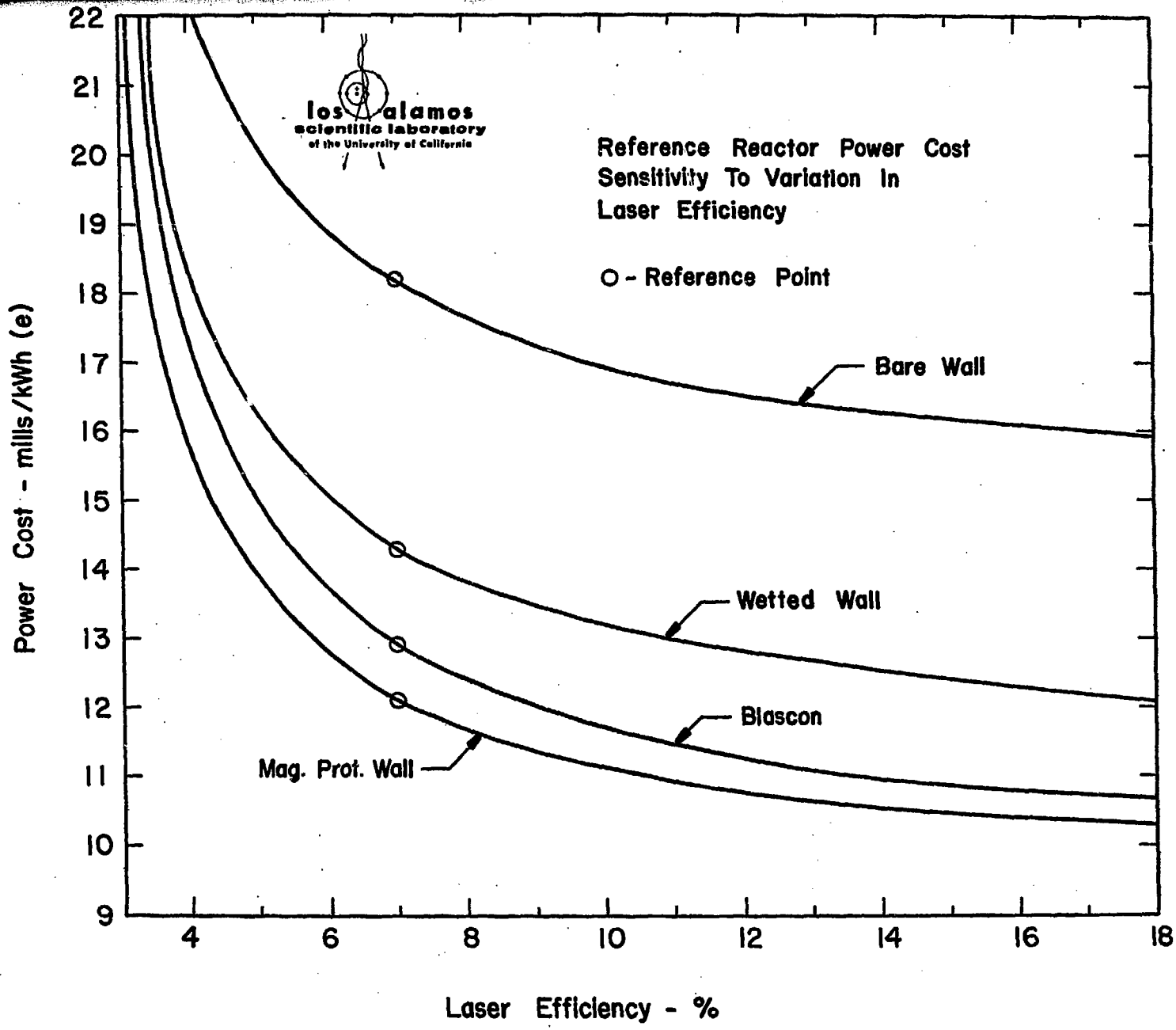
los alamos
scientific laboratory
of the University of California
Reference Reactor Power Cost
Sensitivity To Variation In
Laser Efficiency
O - Reference Point
Bare Wall
Wetted Wall
Blascon
Mag. Prot. Wall
Power Cost - mills/kWh (e)
Laser Efficiency - %
22
21
20
19
18
17
16
15
14
13
12
11
10
9
4
6
8
10
12
14
16
18

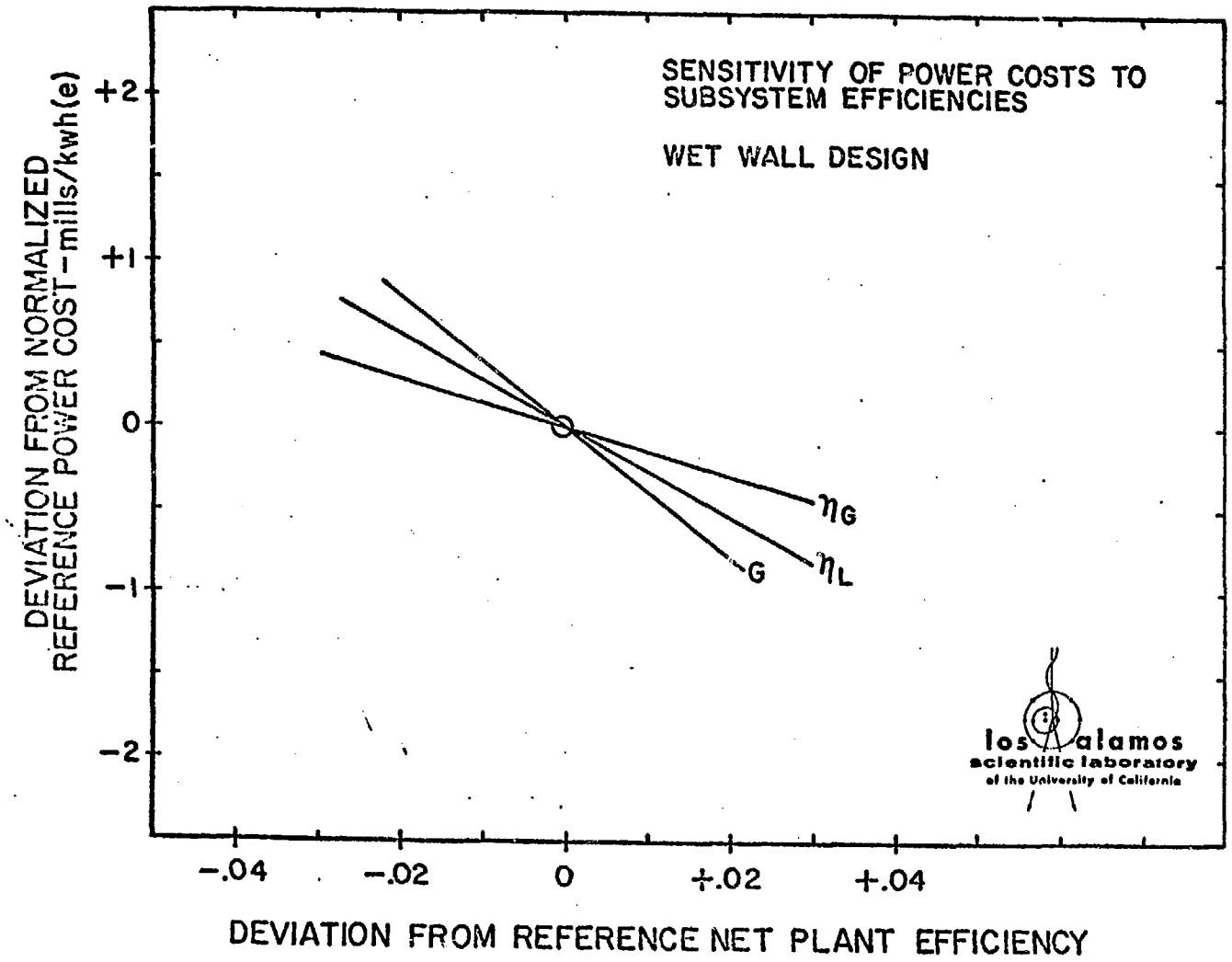
SENSITIVITY OF POWER COSTS TO SUBSYSTEM EFFICIENCIES
WET WALL DESIGN
DEVIATION FROM NORMALIZED REFERENCE POWER COST–mills/kwh(e)
+2
+1
0
−1
−2
η_G
η_L
G
−.04
−.02
0
+.02
+.04
DEVIATION FROM REFERENCE NET PLANT EFFICIENCY
los alamos
scientific laboratory
of the University of California

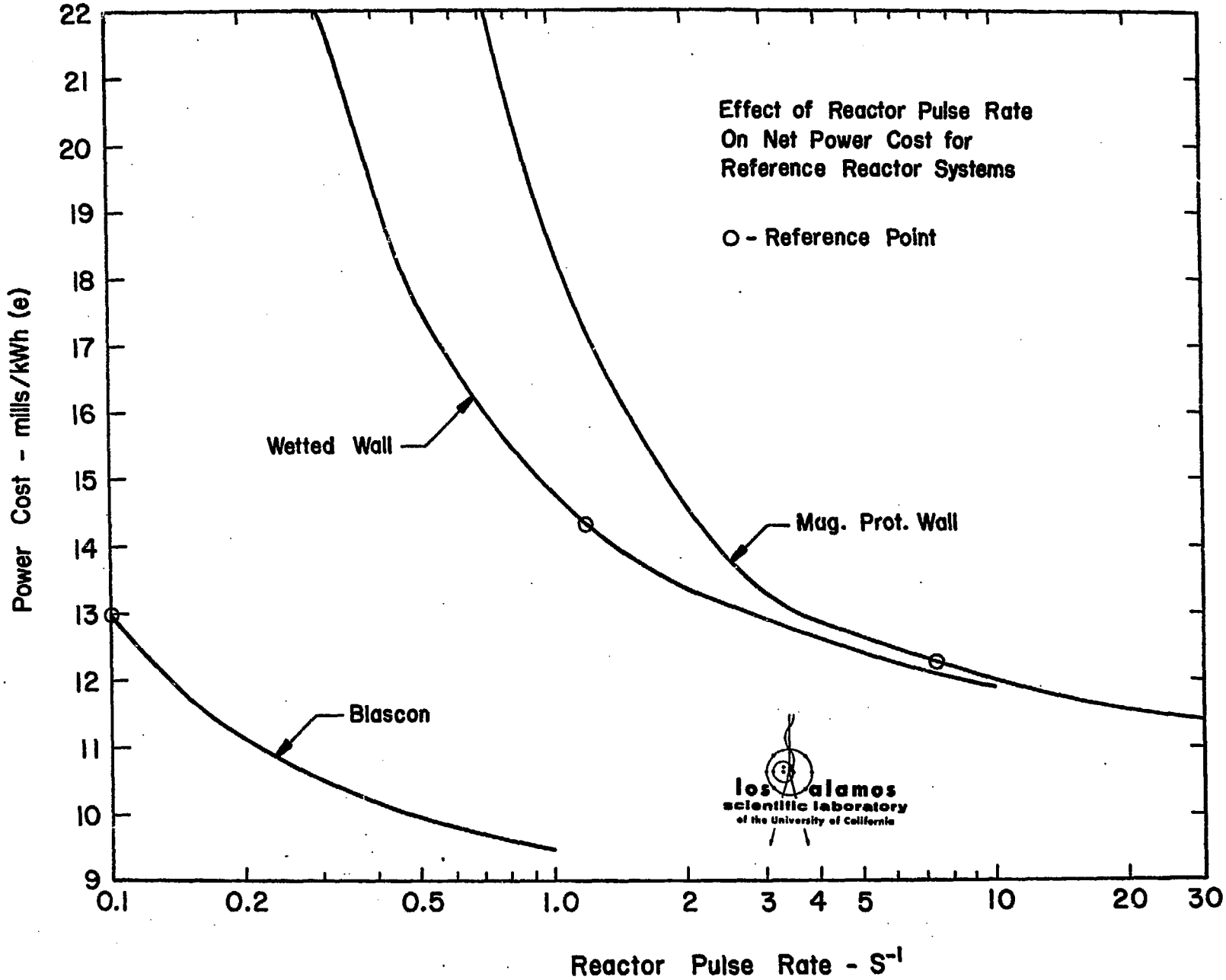
Effect of Reactor Pulse Rate
On Net Power Cost for
Reference Reactor Systems
O - Reference Point
Wetted Wall
Mag. Prot. Wall
Blascon
Power Cost - mills/kWh (e)
Reactor Pulse Rate - S⁻¹
22
21
20
19
18
17
16
15
14
13
12
11
10
9
0.1
0.2
0.5
1.0
2
3
4
5
10
20
30
los alamos
scientific laboratory
of the University of California

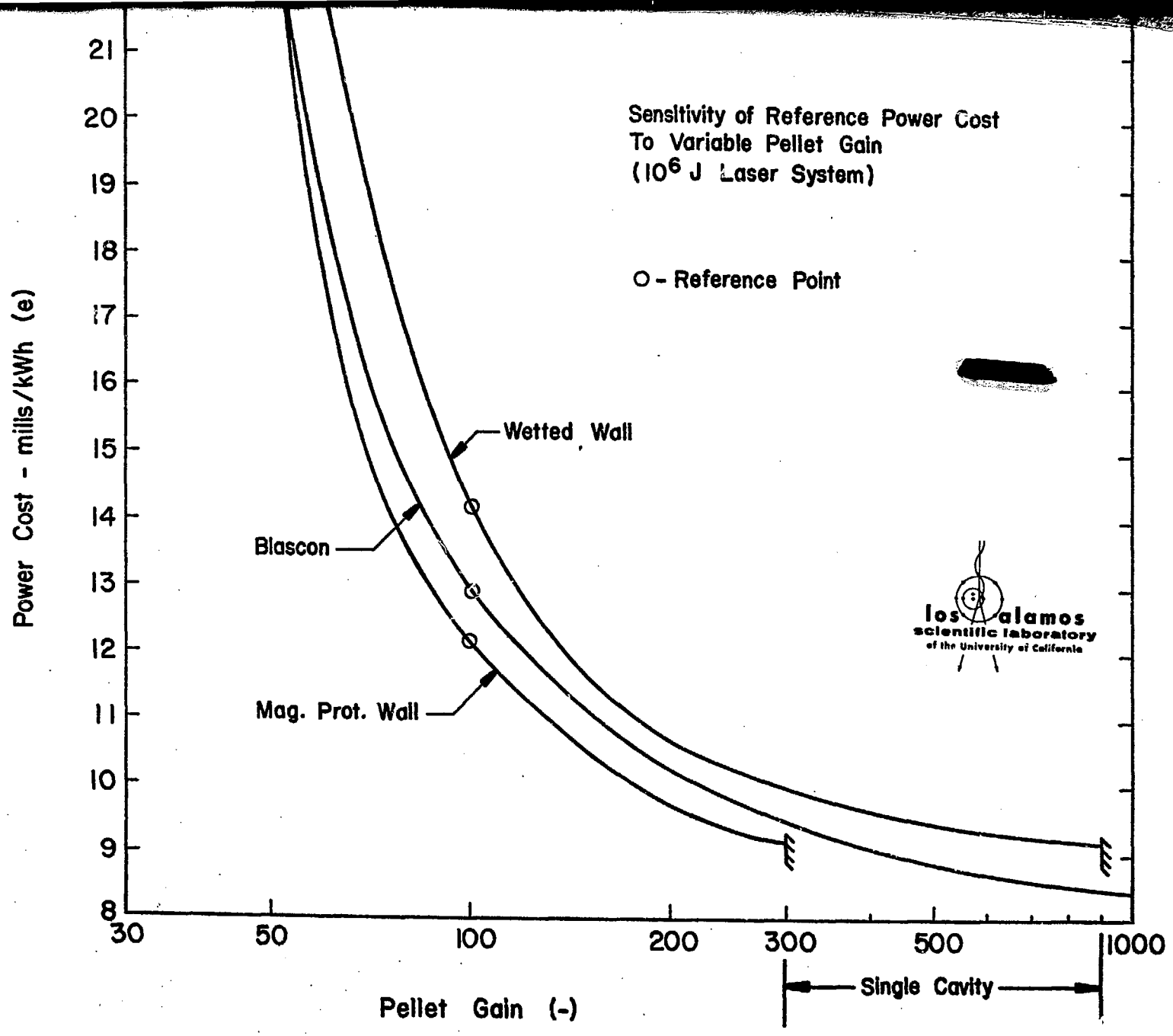
Sensitivity of Reference Power Cost
To Variable Pellet Gain
(10^6 J Laser System)
O - Reference Point
Wetted Wall
Blascon
Mag. Prot. Wall
Power Cost - mills/kWh (e)
21
20
19
18
17
16
15
14
13
12
11
10
9
8
30
50
100
200
300
500
1000
Pellet Gain (-)
Single Cavity
los alamos
scientific laboratory
of the University of California

BLANK PAGE

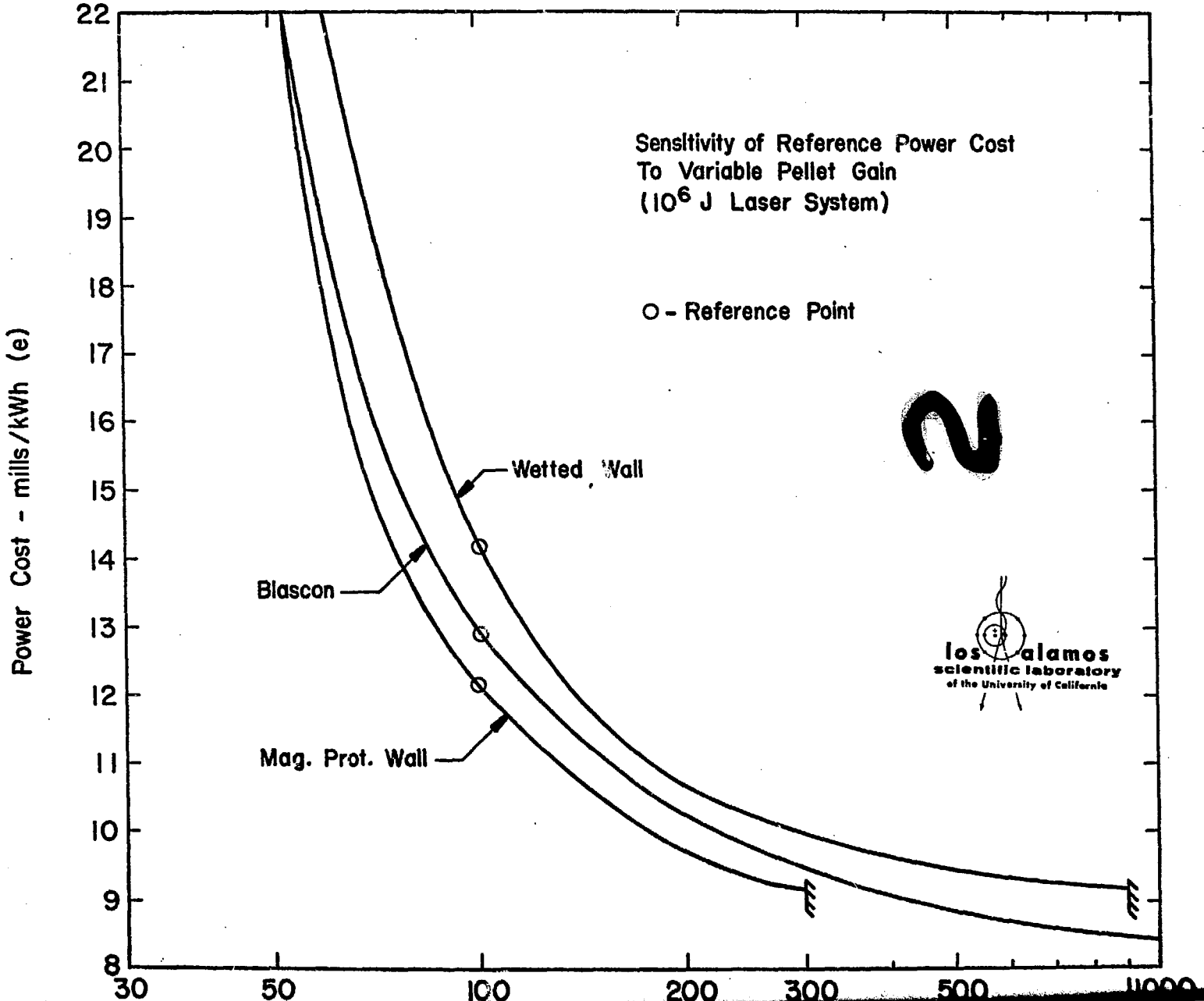
Sensitivity of Reference Power Cost
To Variable Pellet Gain
(10^6 J Laser System)
O - Reference Point
Wetted Wall
Blascon
Mag. Prot. Wall
Power Cost - mills/kWh (e)
22
21
20
19
18
17
16
15
14
13
12
11
10
9
8
30
50
100
200
300
500
1000
los alamos
scientific laboratory
of the University of California