KN KN

OCT 01 1997 Station 34 (21) **ENGINEERING DATA TRANSMITTAL**

Page 1 of 1

1. EDT 161454

2. To: (Receiving Organization) Distribution	3. From: (Originating Organization) FDNW TWRS Engineering Services	4. Related EDT No.: N/A
5. Proj./Prog./Dept./Div.: Interim Stabilization	6. Design Authority/ Design Agent/Cog. Engr.: P. F. Kison	7. Purchase Order No.: N/A
8. Originator Remarks: Clearance and release. KN		9. Equip./Component No.: N/A
		10. System/Bldg./Facility: See Block 15E
11. Receiver Remarks: 11A. Design Baseline Document? [X] Yes [] No		12. Major Assm. Dwg. No.: N/A
		13. Permit/Permit Application No.: N/A
		14. Required Response Date:

15. DATA TRANSMITTED

(A) Item No.	(B) Document/Drawing No.	(C) Sheet No.	(D) Rev. No.	(E) Title or Description of Data Transmitted	(F) Approval Designator	(G) Reason for Transmittal	(H) Originator Disposition	(I) Receiver Disposition
1	HNF-SD-WM-DA-236		0	Supporting Information for Portable Exhauster Installation Designs at Tanks S-109, SX-102/103, BY-105/106, S-101/102, and S-107	SQ	1	1	

16. KEY

Approval Designator (F)	Reason for Transmittal (G)		Disposition (H) & (I)	
E, S, Q, D or N/A (see WHC-CM-3-5, Sec.12.7)	1. Approval 2. Release 3. Information	4. Review 5. Post-Review 6. Dist. (Receipt Acknow. Required)	1. Approved 2. Approved w/comment 3. Disapproved w/comment	4. Reviewed no/comment 5. Reviewed w/comment 6. Receipt acknowledged

17. SIGNATURE/DISTRIBUTION
(See Approval Designator for required signatures)

(G) Reason	(H) Disp.	(J) Name (K) Signature (L) Date (M) MSIN	(G) Reason	(H) Disp.	(J) Name (K) Signature (L) Date (M) MSIN
1	1	Design Authority P.F. Kison 9/22/97 T4-07	1	1	Proj. Mgr. E.M. Veith 9/8/97 H5-56
1	1	Design Agent C.M. Keller 9-3-97 H5-57	1	1	J.R. Kriskovich 9/8/97 R1-56
1	1	Des.Cog.Eng. O.D. Nelson 9/5/97 S2-24	1	1	R.E.Larson 9/8/97 T4-07
1	1	Progr. Mgr. D.W. Crass 9/5/97 H5-68			Central Files A3-88 KN
1	1	QA T.J. Volkman 9/15/97 T4-07			
1	1	Safety L.S. Krogsrud 9/23/97 T4-07			
1	1	TWRS HVAC System Cog. Eng. T.D. Kaiser 9/22/97 T4-07			

18.	19.	20.	21. DOE APPROVAL (if required) Ctrl. No.
9-2-97 Signature of EDT Originator Date	Authorized Representative for Receiving Organization Date	9/8/97 Design Authority/ Cognizant Manager Date	[] Approved [] Approved w/comments [] Disapproved w/comments

BD-7400-172-2 (05/96) GEF097

BD-7400-172-1 (07/91)

SUPPORTING DESIGN INFORMATION FOR PORTABLE EXHAUSTER INSTALLATION AT TANKS S-109, SX-102/103, BY-105/106, S-101/102, AND S-107

Craig M. Keller
Fluor-Daniel Northwest, Richland, WA 99352
U.S. Department of Energy Contract DE-AC06-96RL13200

EDT/ECN: 161453~~4~~ KN UC: 2030
Org Code: 04E00 Charge Code: C13697
B&R Code: EW3120072 Total Pages: 202 KN

Key Words: Portable Exhauster, Saltwell Pumping, Waste Tank Ventilation, Flammable Gas Mitigation

Abstract: This document provides supporting calculations and equipment dedication plans for portable exhausters and ductwork installed on tanks S-109, SX-102/103, BY-105/106, S-101/102, and S-107. The exhausters will ventilate the tanks during saltwell pumping to prevent the potential accumulation of flammable gases.

TRADEMARK DISCLAIMER. Reference herein to any specific commercial product, process, or service by trade name, trademark, manufacturer, or otherwise, does not necessarily constitute or imply its endorsement, recommendation, or favoring by the United States Government or any agency thereof or its contractors or subcontractors.

Printed in the United States of America. To obtain copies of this document, contact: Document Control Services, P.O. Box 950, Mailstop H6-08, Richland WA 99352, Phone (509) 372-2420; Fax (509) 376-4989.

Karen G. Noland 10/1/97
Release Approval Date

KN OCT 01 1997
DATE:
STA: 34
HANFORD RELEASE
ID: 21
Release Stamp

Approved for Public Release

SUPPORTING INFORMATION FOR PORTABLE EXHAUSTER INSTALLATION DESIGNS AT TANKS S-109, SX-102/103, BY-105/106, S-101/102, AND S-107

Prepared by,

Craig M. Keller

Fluor Daniel Northwest
Richland, WA

TABLE OF CONTENTS

1.0 INTRODUCTION 3

2.0 ITEM DEDICATION 3

3.0 DESIGN CALCULATIONS 6

APPENDIX A: DESIGN CALCULATIONS FOR TANK S-109 INSTALLATION A-1

APPENDIX B: DESIGN CALCULATIONS FOR TANKS SX-102/103 INSTALLATION . . . B-1

APPENDIX C: DESIGN CALCULATIONS FOR TANKS BY-105/106 INSTALLATION . . . C-1

APPENDIX D: DESIGN CALCULATIONS FOR TANK S-107 INSTALLATION D-1

APPENDIX E: DESIGN CALCULATIONS FOR TANKS S-101/102 INSTALLATION E-1

APPENDIX F: JUSTIFICATION FOR ELECTRICAL SUPPLY AND DISTRIBUTION F-1

1.0 INTRODUCTION

This document contains design calculations and equipment dedication plans to support the installation designs of portable exhausters and ductwork on waste tanks S-109, SX-102/103, BY-105/106, S-101/102, and S-107. This document provides information to ensure that the designs meet applicable design criteria at the time they were prepared. The exhausters will ventilate the tanks during saltwell pumping to prevent the potential accumulation of flammable gases. Some of the exhausters will be used to ventilate a single tank and others will ventilate two tanks. Installation of the exhausters is planned for FY-98. The following Engineering Change Notices (ECN) provide the exhauster installation design for the tanks.

ECN 618790: 500 cfm exhauster on tank S-109

ECN 618792: 500 cfm exhauster on tanks SX-102 and SX-103

ECN 618793: 500 cfm exhauster on tanks BY-105 and BY-106

ECN 618794: 1000 cfm exhauster on tank S-107

ECN 618795: 1000 cfm exhauster on tanks S-101 and S-102

Dome loading due to the exhauster, ductwork, and installation activities will be considered prior to the installations. Dome loading due to the weight of the exhauster (9500 lbs) and ductwork (2000 lbs est.) is not expected to be a problem based on the allowable load of 200,000 lb for single shell tanks and considering other equipment loads. Dome loading due to the installation activities is also not expected to be a problem assuming the loadings will be similar to the portable exhauster installation on tank A-101.

A field walkdown should be performed prior to exhauster installation due to the significant time span between preparation of the designs and the installation. The walkdown could be used to verify availability of space and electrical power required for the installation. The appropriate ECN's should be reviewed to determine required space and electrical requirements prior to the walkdown.

2.0 ITEM DEDICATION

A few items required for the exhauster installation are classified as safety significant/safety class 2 and were procured as commercial grade items. It is required that these items undergo a dedication process to verify their critical safety characteristics. Table 1 provides a compilation of the items requiring dedication, their critical function, and their method of dedication. The majority of items will be dedicated by performing a pressure/leak test in accordance with ASME B31.3 as part of the exhauster installation.

TABLE 1: DEDICATION OF ITEMS FOR EXHAUSTER INSTALLATION

ITEM	SAFETY FUNCTION	FAILURE MODE	FAILURE EFFECT	SAFETY CLASSIFICATION	DEDICATION METHOD
Expansion Joints for Ventilation Plenum	Provide containment of potentially contaminated airstream Provide flexibility for plenum movements due to seismic/thermal effects	External or internal event causes structural failure of the components	Failure could lead to an unfiltered release of tank vapors	Safety Significant/SC-2 MRP 4-46 Table 1, Item 12	Items purchased as SC-2 Commercial Grade Item. Perform pressure/leak test in accordance with ASME B31.3 Allowable movements for expansion joints provide a significant (>3) margin of safety for intended application.
Pipe Support Slide for ventilation plenum	Provide attachment for structural support of the ventilation plenum	External or internal event causes structural failure of the components Weld attachment of support slide results in material incompatibility with the ventilation plenum.	Failure could lead to an unfiltered release of tank vapors due to breach of ventilation plenum containment.	Safety Significant/SC-2 MRP 4-46 Table 1, Item 15	Items purchased as SC-2 Commercial Grade Item. Perform Eddy Current evaluation to insure material is 300 series SST which is compatible for welding to ventilation plenum. Allowable load rating for pipe slide provides a significant (>3) margin of safety for intended application.
Isolation valves for ventilation plenum and condensate piping	Provide containment of potentially contaminated airstream and condensate liquids.	External or internal event causes structural or operational failure of the components.	Failure could result in a release of tank vapors or condensate liquid	Safety Significant/SC-2 MRP 4-46 Table 1, Item 12	Items purchased as SC-2 Commercial Grade Item. Perform pressure/leak test in accordance with ASME B31.3 Pressure rating of valves provide a significant (>3) margin of safety for intended application

ITEM	SAFETY FUNCTION	FAILURE MODE	FAILURE EFFECT	SAFETY CLASSIFICATION	DEDICATION METHOD
Gasket Material for ventilation plenum and condensate piping	Provide containment of potentially contaminated airstream and condensate liquids	Gasket material fails to provide containment at flanged joints.	Failure could result in a release of tank vapors or condensate liquid	Safety Significant/SC-2 MRP 4-46 Table 1, Item 12	Items purchased as SC-2 Commercial Grade Item. Perform pressure/leak test in accordance with ASME B31.3

3.0 DESIGN CALCULATIONS

Calculations to verify adequacy of the installation designs were prepared and checked. A copy of the calculations for each installation are provided in Appendices A through E of this document. Calculations determined static pressure losses in the ductwork and analyzed for seismic, wind, thermal, and missile effects. Ventilation ductwork was analyzed using criteria in the ASME B31.3 Process Piping Code. Analysis determined all the designs to be acceptable. Justification for the electrical supply and distribution to the portable exhausters is provided in Appendix F.

APPENDIX A: DESIGN CALCULATIONS FOR TANK S-109 INSTALLATION

Fluor Daniel Northwest, Inc.	CALCULATION IDENTIFICATION AND INDEX	Page 1 of 21 Date 1/17/97

This sheet shows the status and description of the attached Design Analysis sheets.

Discipline Mechanical WO/Job No. E40690 Calculation No. M-1

Project No. & Name S-109 500 CFM Exhauster Installation

Calculation Item

These calculations apply to:

Dwg. No. ECN 618790 Rev. No.

Dwg. No. Rev. No.

Other (Study, CDR) Rev. No.

The status of these calculations is:

[] Preliminary Calculations

[X] Final Calculations

[] Check Calculations (On Calculation Dated)

[] Void Calculation (Reason Voided)

Incorporated in Final Drawings? [] Yes [X] No

This calculation verified by independent "check" calculations? [] Yes [] No

Original and Revised Calculation Approvals:

	Rev. 0 Signature/Date	Rev. 1 Signature/Date	Rev. 2 Signature/Date
Originator	Gail Kelly 1-30-97		
Checked by	A Bellen 2-18-97		
Approved by	R.D. Pe 2/18/97		
Checked Against Approved Vendor Data			

INDEX

Design Analysis Page No.	Description
3	Analysis of HEPA filter installation
7	Analysis of ductwork
12	Analysis of ductwork support
~~14~~ 16	Ventilation pressure losses
20	Attachments

Fluor Daniel Northwest, Inc.

Calc. No. M-1
Revision 0
Page No. 2 of 21

DESIGN ANALYSIS

Client LMHC
Subject S-109 Exhauster Installation
Location 241-S-109

WO/Job No. E40690
Date
Checked
Revised

By C. M. Keller
By ~~T. K. Peterson~~ A.F. Wellner
By

OBJECTIVE:

Perform analysis on S-109 exhauster and HEPA filter installation to verify stresses are within acceptable values and to determine expected pressure drop in the ventilation ducting.

CRITERIA:

Ventilation ducting and condensate piping are considered safety significant/safety class 2. The waste tank including risers are considered safety class 1. Design loads are specified in GC-Load -01. Allowable piping stresses are specified in the ASME B31.3 Process Piping Code.

ASSUMPTIONS/GIVENS:

Similarity between the S-109 exhauster installation and that performed on tank A-101 allows partial application of previously performed analysis to this case.

CALCULATION METHOD: Hand calculations are used.

REFERENCES:

1) Design Loads for facilities, GC-LOAD-01, Rev 1, ICF Kaiser Hanford Company

2) Structural Analysis of Exhauster Skid, Calculation P4K700-M-001 Rev 0, Job #C05205/P4K700, J. A. Tuck, May 20, 1996

3) Installation Piping Analysis, Job #P4H514, Calculation M-1 Rev 1, B. M. Koons, 4/30/96

4) Marks Standard Handbook for Mechanical Engineers, 9th edition, McGraw-Hill

5) 1993 ASHRAE Handbook Fundamentals, American Society of Heating, Refrigeration and Air-Conditioning Engineers, Inc.

6) Minimum Design Loads for Buildings and Other Structures ASCE 7-88, American Society of Civil Engineers.

7) Mechanical Engineering Design, 4th edition, Shigley and Mitchell, McGraw-Hill

CALCULATIONS:

Components attached to the tank risers have been analyzed using conservative SC 1 criteria. Those components are the inlet HEPA filter and the ventilation tee. Remainder of the ventilation ducting has been analyzed using SC 2 criteria. Analysis of the condensate piping has not been performed due to similarity with the A-101 piping which was previously analyzed in reference 3.

DESIGN ANALYSIS

Client	WO/Job No. E40690	
Subject	Date	By CRAIG KELLER
	Checked	By ANN WETLNER
Location	Revised	By

Analysis of 500 CFM HEPA FILTER INSTALLATION

TANK S-109 12" RISER 6e

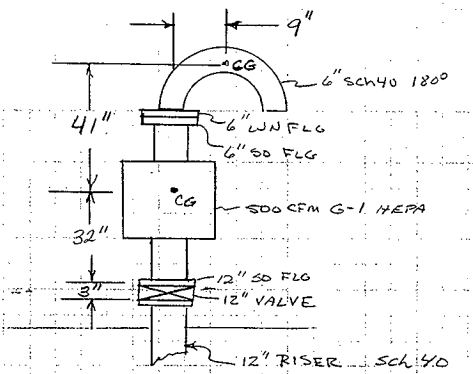

COMPONENT WEIGHTS:

12" VALVE	160#	per Vendor
12" SO. FLG.	64#	per CATALOG
HEPA FILTER	230#	per Vendor
6" S.O. FLG.	19#	per CATALOG
6" WN FLG.	25#	per CATALOG
6" 180° RET.	48#	per CATALOG
	546#	TOTAL

ANALYZE STRESS ON RISER DUE TO:

1) SEISMIC LOADING
2) WIND LOADING
3) ASH LOADING
4) DEAD LOADS
5) SNOW LOADING

DESIGN ANALYSIS

Client	WO/Job No. E40690	
Subject	Date	By CRAIG KELLER
	Checked	By ANN WELLNER
Location	Revised	By

Use SC-1 LOAD CRITERIA per GC-LOAD-01 based on Tank RISER BEING SC1.

Seismic Response WILL BE ANALYZED STATICALLY USING THE PEAK ACCELERATION OF THE RESPONSE SPECTRUM WITH 5% CRITICAL DAMPING. FOR SC1 THE PEAK HORIZONTAL ACCELERATION IS .42g, and VERTICAL ACCELERATION IS 2/3 HORIZONTAL .28g.

MAX VERTICAL LOAD ON RISER DUE TO SEISMIC EFFECT IS

$$(1.28g)(546^{\#}) = 699^{\#}$$

DETERMINE BENDING MOMENT ON RISER DUE TO HORIZONTAL SEISMIC LOAD AND RETURN INLET.

$$\text{Moment} = \Big[\underbrace{160^{\#}(1.5'')}_{\text{VALVE}} + \underbrace{313^{\#}(35'')}_{\text{HEPA W/ FLGS}} + \underbrace{73^{\#}(76'')}_{180^\circ\text{ RETURN}}\Big].42$$

$$+ 48^{\#}(9'') = 7464 \text{ in-lb}$$

RISER PIPE IS 12" sch 40 CS OD = 12.75, ID = 12.0

$$c = \frac{12.75''}{2} = 6.375''$$

$$I = \pi/64\,(D_o^4 - D_i^4) = 279 \text{ in}^4$$

$$\sigma = \frac{Mc}{I} = \frac{7464\,(6.375)}{279} = 170 \text{ psi} \quad \text{OK}$$

DESIGN ANALYSIS

Client	WO/Job No. E40690	
Subject	Date	By CRAIG KELLER
	Checked	By ANN WELLNER
Location	Revised	By

HORIZONTAL LOADING DUE TO WIND PER ASCE 7-88 (ref 6)
USING:

WIND SPEED 90 mph
Importance Factor 1.0
Exposure Class C

EXPOSED AREA: FILTER

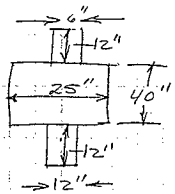

$A = (6 \times 12) + (12 \times 12) + (25 \times 40) = 1216 \text{ in}^2$

Add 20% to account for Valve and Return fitting.

TOTAL Area $= 1.2(1216) = 1460 \text{ in}^2$

WIND LOAD $F = q_z G_h C_f A_f$ ref 6

where, q_z = Velocity Pressure

$q_z = .00256 \; K_z (I \cdot V)^2$

K_z = Velocity Pressure Exposure Coefficient

$K_z = 0.80$ Table 6

I = Importance Factor = 1.0

V = WIND SPEED mph = 90

G_h = Gust Response Factor = 1.32 Table 8

C_f = Force Coefficient = 1.2 Table 13

A_f = Projected Area $ft^2 = \frac{1460}{144} = 10 \text{ ft}^2$

$q_z = .00256(.80)(1.0 \cdot 90)^2 = 16.6$

$F = 16.6(1.32)(1.2)(10) = 263^{\#}$

Calc. No. M-1
Revision 0
Page No. 6 of 21

DESIGN ANALYSIS

Client	WO/Job No. E40690	
Subject	Date	By CRAIG KELLER
	Checked	By ANN WELLNER
Location	Revised	By

HORIZONTAL FORCE DUE TO WIND LOADING IS ONLY MARGINALLY GREATER THEN HORIZONTL SEISMIC FORCE, THEREFORE WILL NOT FURTHER CALCULATE RISER STRESS DUE TO WIND LOAD.

HORIZONTAL SEISMIC = .42(546) = 229# => 160psi
HORIZONTAL WIND LOAD = 263# OK

CONSIDER ASH/SNOW LOADING ref 1

ASH LOAD: 24#/ft²
SNOW LOAD: 15#/ft

FILTER AREA IS 10ft²

F = 240# due to ASH

MAX VERTICAL FORCE ON RISER IS 240#+546# = 786# O.K.

Summary: Design of HEPA FILTER INSTALLATION IS ADEQUATE. No Additional support is needed.

KAISER ENGINEERS
HANFORD

Calc. No. M-1
Revision 0
Page No. 7 of 21

DESIGN ANALYSIS

Client	WO/Job No. E40690	
Subject	Date	By CRAIG KELLER
	Checked	By ANN WELLNER
Location	Revised	By

ANALYSIS OF DUCTWORK FROM RISER TO EXHAUSTER.

ANALYZE USING SC2 LOADS FOR DUCTWORK

EVALUATE THE FOLLOWING:

- LOAD ON RISER
- Verify ALLOWABLE LIMITS FOR EXPANSION JOINT
- CHECK HORIZONTAL/VERTICAL LOADS ON DUCTWORK

ANALYSIS:

Determine LOAD ON RISER—

12" LAP JOINT FLANGE	82#
12" sch 10 6"L	12#
12"X6' RED TEE	75#
12" WN FLG	80#
12" BLIND FLG	110#
6" sch 40 12"L	10#
6" BFLY VALVE	40#
	409#

DEAD WEIGHT ON RISER AND EXPOSED AREA ARE LESS THEN FOR HEPA FILTER INSTALLATION. NO FURTHER ANALYSIS IS REQUIRED. RISER STRESS IS LESS THAN DETERMINED FOR HEPA FILTER INSTALLATION.

KAISER ENGINEERS
HANFORD

Calc. No. M-1
Revision 0
Page No. 8 of 21

DESIGN ANALYSIS

Client	WO/Job No. E40690	
Subject	Date	By CRAIG KELLER
	Checked	By ANN WELLNER
Location	Revised	By

VERIFY EXP. JOINT IS CAPABLE OF DISPLACEMENTS—

Seismic analysis to determine displacement of exhauster skid was previously performed for the TANK A-101 INSTALLATION IN Section N of reference 2. Similarity between installations make the previous results applicable to this installation. Horizontal displacement of the exhauster skid was calculated to be .083" for SC2 seismic event and .28" for SC1 event.

EXP JOINT: PATHWAY 6NS FF 5012C-M1

ALLOWABLES
AXIAL EXTENSION: 1.0"
AXIAL COMPRESSION: 1.99"
LATERAL MVMT: 0.68"

- Check LATERAL MOVEMENT. USE CONSERVATIVE DISPLACEMENT OF SKID IN SC1 EVENT.

$.28 < .68$ OK

- Check AXIAL MOVEMENT. COMBINE SKID SEISMIC DISPLACEMENT AND DUCT THERMAL EXPANSION.

Expansion Coefficient for SS is 9.6 E-6/°F ref 7

For 10' DUCT Length w/ $\Delta T = 150°F$

$\Delta L = 120''(150°)(9.6E-6) = .17''$

TOTAL DISPLACEMENT $.17 + .28 = .45 < 1.0''$ OK

Calc. No. M-1
Revision 0
Page No. 9 of 21

DESIGN ANALYSIS

Client	WO/Job No. E40690	
Subject	Date	By CRAIG KELLER
	Checked	By ANN WELLNER
Location	Revised	By

ANALYZE 10' SPAN OF DUCTWORK BETWEEN SUPPORTS. Consider Vertical loading due to pipe weight, INSULATION, SNOW LOAD, and seismic events. Consider HORIZONTAL loading due to WIND and seismic events. Use SCZ LOADS

Pipe: 6" sch 40 SS $W_p = 19.15\ \#/ft$

6.625 OD
6.065 ID

INSULATION: 2" THK, 6.5 #/ft³

$$W_I = (6.5\ \#/ft^3)\ \pi/4\ \left(\left(\frac{10.625}{12}\right)^2 - \left(\frac{6.625}{12}\right)^2\right) = 2.4\ \#/ft$$

Snow LOAD: 15 #/ft²

$$W_S = (15\ \#/ft^2)\left(\frac{10.625}{12}\right) = 13.3\ \#/ft$$

Seismic forces WILL BE ANALYZED by a simplified METHOD OF APPLYING THE PEAK ACCELERATION TAKEN FROM THE RESPONSE SPECTRUM PROVIDED IN REF. 1. THIS METHOD OF ANALYSIS IS JUSTIFIED BY THE SIMPLE CONFIGURATION BEING ANALYZED. PEAK HORIZONTAL ACCELERATION IS .26g TAKEN FROM FIG. 5 in Ref 1. USING 5% Critical DAMPING, VERTICAL ACCELERATION IS 2/3 HORIZONTAL EQUATING TO .17g.

VERTICAL SEISMIC FORCE: $(19.15 + 2.4\ \#/ft)(.17) = 3.7\ \#/ft$

∴ Snow LOAD IS GREATER THAN VERTICAL SEISMIC FORCE.

Calc. No. M-1
Revision 0
Page No. 10 of 21

DESIGN ANALYSIS

Client	WO/Job No.	E40690	
Subject	Date	By CRAIG KELLER	
	Checked	By ANN WELLNER	
Location	Revised	By	

Worst case Vertical LOADING ON SC2 DUCTWORK IS A DISTRIBUTED LOAD DUE TO:

PIPE WEIGHT	$w_p = 19.15$ #/ft
INSULATION	$w_I = 2.4$ #/ft
SNOW LOAD	$w_s = 13.3$ #/ft
	$w_{TOTAL} = 35$ #/ft

Analyze pipe as simply supported beam w/ uniform distributed load. Use pipe length of 10'

$$M_{MAX} = \frac{wx}{2}(l-x) \quad w/\ x = l/2 \qquad \text{ref. 7}$$

$$= \frac{wl}{4}(l - l/2) = \frac{wl^2}{8} = \frac{(35\ \#/ft)(10\ ft)^2}{8} = 437.5\ ft\cdot lb = 5250\ in\cdot lb$$

$$I = \pi/64\,(D_o^4 - D_i^4) = \pi/64\,(6.625^4 - 6.065^4) = 28\ in^4$$

$$\sigma_{max} = \frac{(5250\ in\cdot lb)(3.313\ in)}{28\ in^4} = 621\ psi \qquad OK$$

Per B31.3 ALLOWABLE STRESS IN DUCT PIPE IS 16.7 KSI.

KAISER ENGINEERS
HANFORD

DESIGN ANALYSIS

Calc. No. MA-1
Revision 0
Page No. 11 of 21

Client	WO/Job No.	E40690
Subject	Date	By CRAIG KELLER
	Checked	By ANN WELLNER
Location	Revised	By

EVALUATE HORIZONTAL LOADS DUE TO WIND AND SEISMIC

Seismic = (19.15 + 2.4)(10')(.26) = 56#

WIND: Use SC2 80 mph Wind Velocity

Area = (10')(19/12') = 8.3 ft²

WIND $F = q_z G_h C_f A_f$ ref 6

$q_z = .00256 K_z (IV)^2$

$K_z = .80$ TABLE 6

$I = 1.0$

$V = 80$ mph

$q_z = 13.1$

$G_h = 1.32$ TABLE 8

$C_f = 1.2$ TABLE 13

$A = 8.3$

$F = (13.1)(1.32)(1.2)(8.3) = 172$#

HORIZONTAL LOAD ON DUCTWORK IS SUPPORTED EQUALLY BY THE EXHAUSTER AND THE PIPE SUPPORT. PIPE SUPPORT LOAD IS 86#

KAISER ENGINEERS
HANFORD

Calc. No. M-1
Revision 0
Page No. 12 of 21

DESIGN ANALYSIS

Client	WO/Job No. E40690	
Subject	Date	By CRAIG KELLER
	Checked	By ANN WELLNER
Location	Revised	By

ANALYZE DUCT SUPPORT CONSIDERING VERTICAL AND HORIZONTAL LOADS.

$$F_V = \frac{(35\ \#/ft)(10\ ft)}{2} = 175^{\#}$$

$$F_H = 86^{\#}$$

Pipe Support is GRINNELL FIG 280 Rated Capacity #8,000

4" Sch 40 pipe ASTM A53 48" Length OD = 4.5" ID = 4.03"

per ASME B31.3 $\sigma_{all} = 16$ Ksi for A53 pipe

Concrete footing 30" SQ, 3000 psi, $\rho = 100\ \#/ft^3$ (conservative)
10" DP $W = 521^{\#}$

Support Wt $50^{\#}$

SOIL LOAD $\frac{175^{\#} + 521^{\#} + 50^{\#}}{(30/12)^2} = 120$ psf OK

- Typical ALLOWABLE SOIL LOAD AT HANFORD IS 2000 psf -

EVALUATE BENDING STRESS IN PIPE

$$I = \pi/64\,(4.5^4 - 4.03^4) = 7.18$$

$$\sigma = \frac{86\,(48'')(2.25)}{7.18} = 1293 \text{ psi} \quad OK$$

CHECK OVERTURNING OF SUPPORT

$$wt = (100\ \#/ft^3)(30/12)^2(10/12) = 521^{\#}$$

KAISER ENGINEERS
HANFORD

Calc. No. M-1
Revision 0
Page No. 13 of 21

DESIGN ANALYSIS

Client	WO/Job No.	E40690	
Subject	Date	By	CRAIG KELLER
	Checked	By	ANN WELLNER
Location	Revised	By	

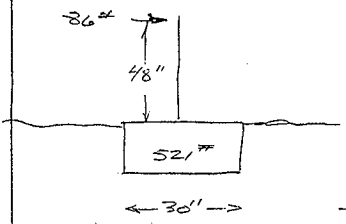

OVERTURN MOMENT $M_o = 86 \cdot 48 = 4128$

RESTRAINING MOMENT $M_R = 521(15) = 7815$

Overturning of support will not occur.

Restraing moment is greater then overturning.

Coefficient of friction between soil and concrete base is conservatively estimated to be .45. Since friction coefficient is greater then horizontal seismic acceleration, sliding of pipe support is not a concern.

KAISER ENGINEERS
HANFORD

Calc. No. M-1
Revision 0
Page No. 14 of 21

DESIGN ANALYSIS

Client	WO/Job No. E40690		
Subject	Date	By CRAIG KELLER	
	Checked	By ANN WELLNER	
Location	Revised	By	

EVALUATE STRESS AT EXHAUSTER INLET. INLET IS 12" sch 40 PIPE SUPPORTED BY 3X2X1/4 C.S. ANGLE AS SHOWN BELOW.

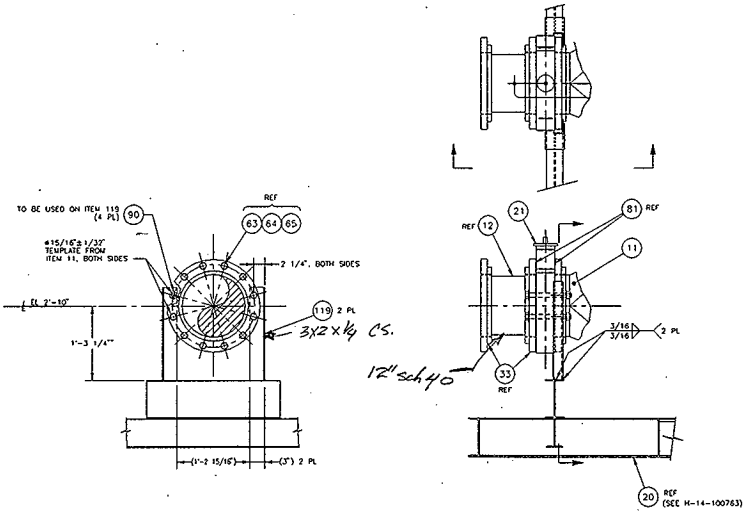

1/2 DETAIL
SCALE: 1 1/2" = 1'-0"

Verify INLET SUPPORT IS ADEQUATE FOR LOADS IMPOSED DUE TO SEISMIC AND THERMAL FORCES. Support IS A36 CARBON STEEL WITH:

$$\sigma_{ALLOWABLE} = .6\,\sigma_y = .6(36ksi) = 22ksi$$

VERTICAL AND HORIZONTAL LOADS ON THE INLET SUPPORT ARE NOT EVALUATED DUE TO THEIR SMALL MAGNITUDE.

$F_V = 175^{\#}$ $F_H = 86^{\#}$

DESIGN ANALYSIS

Client	WO/Job No.	
Subject	Date	By CRAIG KELLER
	Checked	By ANN WELLNER
Location	Revised	By

AXIAL LOADING DUE TO COMPRESSION OF THE EXPANSION JOINT WILL BE EVALUATED.

DETERMINE MAXIMUM ALLOWABLE FORCE ON SUPPORTS

$$\sigma = \frac{F/2\,(15.25'')}{S} \qquad 3\times2\times\tfrac{1}{4} \quad S = .260\ in^3$$

$$22E3\,psi = \frac{F/2\,(15.25)}{.260} \Rightarrow F_{MAX} = 750^{\#}$$

AXIAL SPRING RATE OF EXPANSION JOINT IS 240 #/in

AXIAL DISPLACEMENT DUE TO THERMAL AND SEISMIC EVENTS IS .45" from previous CALCULATION.

$$F = .45''\,(240\,\#/in) = 108^{\#} < 750^{\#} \quad OK$$

KAISER ENGINEERS
HANFORD

Calc. No. M-1
Revision 0
Page No. 16 of 21

DESIGN ANALYSIS

Client	WO/Job No. E40690	
Subject	Date	By CRAIG KELLER
	Checked	By ANN WEILLNER
Location	Revised	By

CALCULATE EXPECTED PRESSURE LOSS FROM ATMOSPHERE TO EXHAUSTER INLET.

Use Saturated Air at tank temperature 140°F

Use Q = 500 CFM

FIND ΔP for the following

1) INLET HEPA FILTER AND RISER
2) OUTLET RISER
3) DUCT/FITTINGS RISER TO EXHAUSTER

INLET FILTER AND RISER:

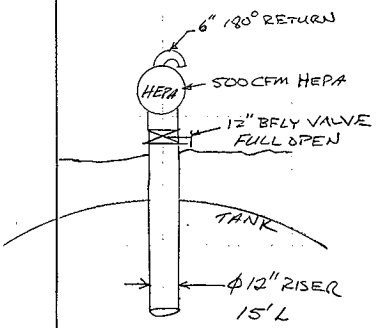

LOSSES

6" 180° RETURN	L_e = 25'	ref 4
HEPA FILTER	ΔP = 1" W.G.	mfg
BFLY VALVE	L_e = 13'	ref 4, GATE VALVE
12" RISER	L = 15'	
INLET LOSS	L_e = 73'	ref 4

KAISER ENGINEERS
HANFORD

Calc. No. M-1
Revision 0
Page No. 17 of 21

DESIGN ANALYSIS

Client	WO/Job No. E40690	
Subject	Date	By CRAIG KELLER
	Checked	By ANN WELLNER
Location	Revised	By

OUTLET RISER:

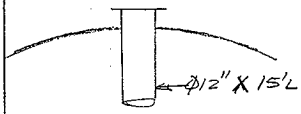

EXIT LOSS Le = 47' ref 4
RISER PIPE L = 15'

DUCT WORK:

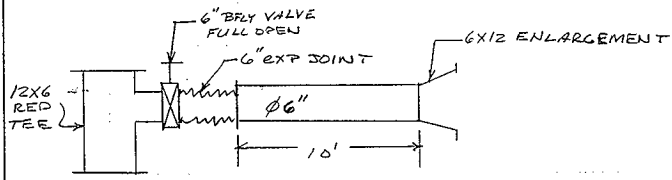

LOSS FOR SIDE OUTLET ON A 12X6 REDUCING TEE IS ASSUMED EQUIVALENT TO A 12" SIDE OUTLET TEE FOLLOWED BY A 12X6 CONTRACTION.

12" SIDEOUTLET TEE	Le = 60'	ref 4
12X6 CONTRACTION	Le = 11'	ref 4
6" BFLY VALVE	Le = 7'	ref 4, Gate VALVE
6" EXP JOINT	Le = 8'	EST.
6" X 10' DUCT	L = 10'	
6X12 ENLARGEMENT	Le = 22'	ref 4

KAISER ENGINEERS
HANFORD

DESIGN ANALYSIS

Calc. No. M-1
Revision 0
Page No. 18 of 21

Client	WO/Job No. E40690	
Subject	Date	By CRAIG KELLER
	Checked	By ANN WELLNER
Location	Revised	By

LOSS SUMMARY:

6" PIPE: 25' + 7' + 8' + 10' + 22' = 72'

12" PIPE: 13' + 15' + 73' + 47' + 15' + 60' + 11' = 234'

HEPA FILTER: ΔP = 1" W.G.

DETERMINE LOSS FOR 6" & 12" PIPE LENGTHS

$$\Delta p = f\left(\frac{12L}{D}\right)\rho\left(\frac{V}{1097}\right)^2$$ ref 5 pg 32.4

where: Δp = STATIC pressure loss (in W.C.)

f = friction factor

L = DUCT length (ft)

D = DUCT DIAMETER (in.)

V = Velocity (fpm)

ρ = Density (lbm/ft^3)

Determine density for sat air @ 140°F

$$\rho = (1/v)(1+W)$$ ref 5 pg 6-12

$$v = \frac{R_a T}{p - p_w}$$ = MOIST AIR specific VOLUME

p = TOTAL pressure = 14.7 psi = 2117 psf

P_w = Partial Pressure of water VAPOR

@140°F P_w = 2.8926 psi = 416.5344 psf ref 5 Table 3 sect 6

KAISER ENGINEERS
HANFORD

DESIGN ANALYSIS

Calc. No. M-1
Revision 0
Page No. 19 of 21

Client	WO/Job No.	E40690
Subject	Date	By CRAIG KELLER
	Checked	By ANN WELLNER
Location	Revised	By

$$R_a = 53.352 \ \frac{ft \cdot lbf}{lbm \ ^\circ R}$$

$$T = \text{abs Temp} = 140 + 460 = 600^\circ R$$

$$V = \frac{(53.352)(600)}{2117 - 416.5344} = 18.825 \ ft^3/lb$$

W = Humidity Ratio = W_s at Sat

$$W = .153538$$ ref 5 Table 2 sect 6

$$\rho = \frac{1}{18.825}(1 + .153538) = .0613 \ lb/ft^3$$

Determine friction factor f :

$$Re = \frac{VD}{\nu}$$

ν = Kinematic Viscosity = μ/ρ

$\mu = 13E^{-6}$ for Sat air @ 140°F ref 5 fig 12 sect 6

w/ $X_w = \frac{P_w}{P} = \frac{416}{2117} \approx .2$

$$\nu = \frac{13E^{-6}}{.0613} = 2.12E^{-4} \ ft^2/s$$

For 500 CFM in Ø6" sch 40 DUCT

$$V = \frac{500}{\pi/4 \left(\frac{6.065}{12}\right)^2} = 2492 \ fpm$$

$$Re = \frac{(2492 \ ft/min)\left(\frac{6.065}{12} ft\right)}{(2.12E^{-4} \ ft^2/s)\left(\frac{60 \ sec}{min}\right)} = 9.9E4$$ Turbulent Flow

KAISER ENGINEERS
HANFORD

DESIGN ANALYSIS

Calc. No. M-1
Revision 0
Page No. 20 of 21

Client	WO/Job No. E40690	
Subject	Date	By CRAIG KELLER
	Checked	By ANN WELLNER
Location	Revised	By

Determine f from Moody Chart ref 5 fig 13 Sect 2

Use $\epsilon = .00015$ ft Steel DUCT

Relative Roughness $\epsilon/D = \frac{.00015}{6.065/12} = .0003$

$f = .019$

Compute ΔP for 100' of 6" sch 40 w/ Q = 500CFM

$\Delta p = f\left(\frac{12L}{D}\right)\rho\left(\frac{V}{1097}\right)^2$

$\Delta p = .019\left(\frac{12 \cdot 100'}{6.065''}\right) .0613\left(\frac{2492}{1097}\right)^2 = 1.19$ in WG/100'

For 500 CFM IN ϕ12" sch 40 DUCT:

$V = \frac{500}{\pi/4\ 1^2} = 637$ fpm

$Re = \frac{(637)(1')}{(2.12E-4)(60)} = 50E4$

$\epsilon/D = .00015$ $f = .021$

Compute ΔP for 100' of 12" DUCT w/ 500CFM

$\Delta P = .021\left(\frac{12 \cdot 100}{12}\right) .0613\left(\frac{637}{1097}\right)^2 = .04$ in WG/100'

KAISER ENGINEERS
HANFORD

Calc. No. M-1
Revision 0
Page No. 21 of 21

DESIGN ANALYSIS

Client	WO/Job No. E40690	
Subject	Date	By CRAIG KELLER
	Checked	By ANN WELLNER
Location	Revised	By

TOTAL PRESSURE LOSS FROM ATMOSPHERE TO EXHAUSTER INLET IS:

$$\Delta P = 72' \left[\frac{1.19 \text{ inWG}}{100'}\right] + 234' \left[\frac{.04 \text{ in WG}}{100'}\right] + 1'' \text{ W.G.}$$

$$\Delta P = 2.0 \text{ in W.G.}$$

APPENDIX B: DESIGN CALCULATIONS FOR TANKS SX-102/103 INSTALLATION

Fluor Daniel Northwest, Inc.	CALCULATION IDENTIFICATION AND INDEX	Page 1 of 22 Date 5/28/97

This sheet shows the status and description of the attached Design Analysis sheets.

Discipline Mechanical WO/Job No. E40690 Calculation No. M-2

Project No. & Name 241-SX-102/103 500 CFM Exhauster Installation

Calculation Item

These calculations apply to:

Dwg. No. ECN 618792 Rev. No.

Dwg. No. Rev. No.

Other (Study, CDR) Rev. No.

The status of these calculations is:

[] Preliminary Calculations

[X] Final Calculations

[] Check Calculations (On Calculation Dated)

[] Void Calculation (Reason Voided)

Incorporated in Final Drawings? [] Yes [X] No

This calculation verified by independent "check" calculations? [] Yes [] No

Original and Revised Calculation Approvals:

	Rev. 0 Signature/Date	Rev. 1 Signature/Date	Rev. 2 Signature/Date
Originator	Craig M. Keller 5/29/97		
Checked by	D. Moody 5/29/97		
Approved by	R.B. Pu 5/29/97		
Checked Against Approved Vendor Data			

INDEX

Design Analysis Page No.	Description
3	Analysis of Piping Supports
12	Analysis of Exhauster Inlet
16	Ventilation Pressure Losses
22	Attachments:
	Piping Analysis
	Misc. Vendor and Analysis Information

Fluor Daniel Northwest, Inc.

Calc. No. M-2
Revision 0
Page No. 2 of 22

DESIGN ANALYSIS

Client LMHC
Subject SX-102/103 Exhauster Installation
Location 241-SX-102/103

WO/Job No. E40690
Date 5/28/97 By C. M. Keller
Checked 5/28/97 By D. A. MOODY
Revised By

OBJECTIVE:

Perform analysis on SX-102/103 exhauster installation (ECN 618792) to verify stresses are within acceptable values and to determine expected pressure drop in the ventilation ducting.

CRITERIA:

The exhauster and associated piping are analyzed using Safety Class 2 design loads provided in reference 1. Piping is analyzed using criteria specified in the ASME B31.3 Process Piping Code. Structural members have been analyzed using criteria specified in reference 3.

ASSUMPTIONS/GIVENS:

Piping stresses and support reactions are contained in the piping analysis provided in the Attachments section. Analysis of the exhauster condensate piping in refernce 6 is considered a governing case.

CALCULATION METHOD: Hand calculations and Autopipe analysis have been used to verify adequacy of the design.

REFERENCES:

1) Design Loads for facilities, GC-LOAD-01, Rev 1, ICF Kaiser Hanford Company

2) Minimum Design Loads for Buildings and Other Structures ASCE 7-88, A.S.C.E.

3) Manual of Steel Construction, Allowable Stress Design, 9th Edition, American Institute of Steel Construction, 1989

4) Marks Standard Handbook for Mechanical Engineers, 9th edition, McGraw-Hill

5) 1993 ASHRAE Handbook Fundamentals, American Society of Heating, Refrigeration and Air-Conditioning Engineers, Inc.

6) Installation Piping Analysis, Job #P4H514, Calculation M-1 Rev 1, B. M. Koons, 4/30/96

7) Mechanical Engineering Design, 4th edition, Shigley and Mitchell, McGraw-Hill

8) Design of Structures for Missile Impact, BC-TOP-9A Rev 2, Bechtel Power Corp.

9) Design of Expansion Anchors, GC-ANCR-01, Rev 1, ICF Kaiser Hanford Company

10) Roarks Formulas for Stress and Strain, 6th Edition, McGraw-Hill

11) Foundation Engineering Handbook, 2nd Edition, Hsai-Yang Fang

KAISER ENGINEERS
HANFORD

DESIGN ANALYSIS

Calc. No. M-2
Revision 0
Page No. 3 of 22

Client	WO/Job No. E40690	
Subject	Date 5/28/97	By CM KELLER
	Checked 5/28/97	By DA MOODY
Location	Revised	By

ANALYZE STRESS ON VERTICAL PIPE SUPPORTS

SUPPORT DETAIL:

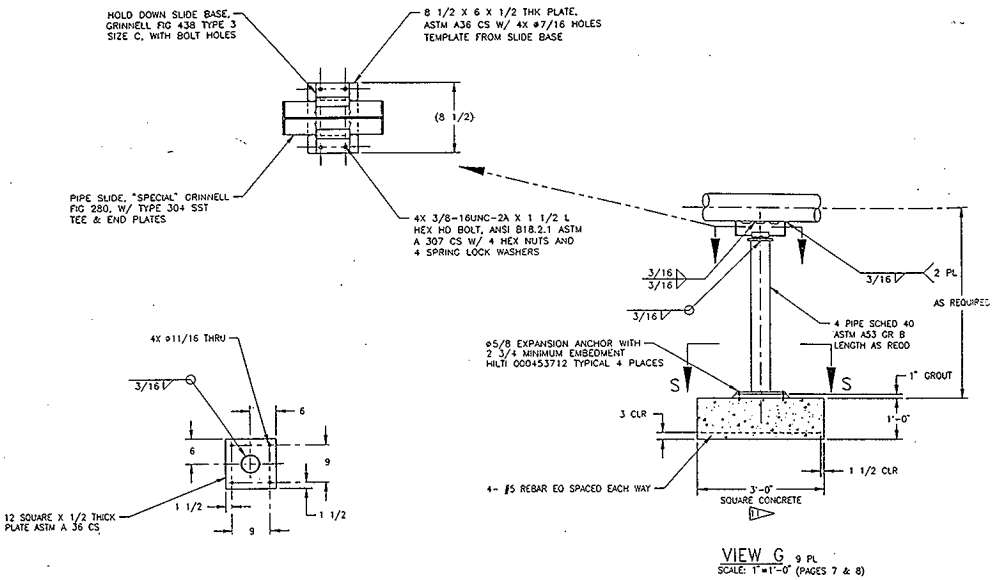

USE SUPPORT REACTION FORCES FROM AUTOPIPE ANALYSIS.

WORST CASE HORIZONTAL LOADING IS SUPPORT B50.

(NOTE: SUPPORT B65 IS DIFFERNT TYPE ANALYZED LATER)

KAISER ENGINEERS
HANFORD

DESIGN ANALYSIS

Calc. No. M-2
Revision 0
Page No. 4 of 22

Client	WO/Job No. E40690	
Subject	Date 5/28/97	By CM KELLER
	Checked 5/28/97	By DA MOODY
Location	Revised	By

HORIZONTAL FORCE ON THE SUPPORT DUE TO WIND LOADING IS CALCULATED IN THIS ANALYSIS TO BE 344#.

WIND LOADING IS GREATER THEN SEISMIC.

LOADS FOR SUPPORT ANALYSIS ARE:

	X (HORIZ)	Y (VERT)	Z (HORIZ)
GRAVITY	—	-364	—
THERMAL	-193	—	75
WIND	± 344	—	—
TOTALS	-537	-364	75

DETERMINE SUPPORT DISTANCE GRADE TO PIPE ℄:

℄ PIPE ELEVATION 665.23'

GRADE ELEVATION 661.71' (AVG OF 2 TANKS)

SUPPORT DISTANCE $(665.23 - 661.71)(12) = 42''$

CHECK OVERTURNING OF SUPPORT:

OVERTURN MOMENT ≤ 2/3 RESTORING MOMENT

$M_o = 537^{\#}(42'') = 22\,554$ in·lb

Concrete Density $150^{\#}/ft^3$

$M_R = [(9\,ft^3)(150^{\#}/ft^3) + 364^{\#}](18'') = 30\,852$ in·lb

$2/3\ M_R = 20\,568$ in·lb

$22\,554 > 20\,568$ NOT OK

KAISER ENGINEERS
HANFORD

DESIGN ANALYSIS

Calc. No. M-2
Revision 0
Page No. 5 of 22

Client	WO/Job No. E40690	
Subject	Date 5/28/97	By CM KELLER
	Checked 5/28/97	By DA MOODY
Location	Revised	By

CHECK SUPPORT OVERTURN WITH CONCRETE BASE SIZE INCREASED TO 3'X4' WITH 4' DIMENSION PERPENDICULAR TO THE PIPE RUN.

$M_R = [(12ft^3)(150\ \#/ft^3) + 364]\ (24'') = 51\ 936$ in lb

$2/3\ M_R = 34\ 624$ in lb

$22\ 554 < 34\ 624$ OK

∴ SUPPORT CONCRETE BASE SIZE SHOULD BE INCREASED TO 3'X4'. THIS SIZE WILL PROVIDE THE MINIMUM 2/3 SAFETY MARGIN FOR SUPPORT OVERTURNING.

CHECK STRESS IN SUPPORT PIPE:

4" Sch 40 ASTM A53 CS $\sigma_y = 30$ ksi min.

$S = 3.21\ in^3$ $\sigma_{ALL} = .6(\sigma_y) = 18$ ksi

$A = 3.17\ in^2$

$\tau = \frac{537}{3.17} = 169$ psi ⇒ NEGLECT SHEAR STRESS

Normal stress due to bending,

$M = \sqrt{537^2 + 75^2}\ (42'') = 22,773$ in·lb

$\sigma = \frac{22773}{3.21} = 7094$ psi < 18 ksi OK

∴ Support pipe size is acceptable.

KAISER ENGINEERS
HANFORD

Calc. No. M-2
Revision 0
Page No. 6 of 22

DESIGN ANALYSIS

Client	WO/Job No. E40690		
Subject	Date 5/28/97	By CM KELLER	
	Checked 5/28/97	By DA MOODY	
Location	Revised	By	

CHECK STRESS IN WELD OF PIPE TO BASE PLATE

ALLOWABLE WELD STRESSES

TENSION $\sigma_{ALL} = .6\ S_y = .6(30\ ksi) = 18\ ksi$

SHEAR $\tau_{ALL} = .4\ S_y = .4(30\ ksi) = 12\ ksi$

1/4" - FILLET WELD $A = .707\ h\ \pi D = .707(1/4)(\pi)(4.5")$

$A = 2.50\ in^2$

$\tau = \frac{542}{2.50} = 217\ psi$ (NEGLIGIBLE)

NORMAL STRESS DUE TO BENDING $\sigma = \frac{Mc}{I}$

$I = .707\ h\ I_u$ ref 7, Sect 9-4

$I_u = \pi r^3 = \pi (2.25)^3 = 35.78\ in^3$

$I = .707(1/4)(35.78) = 6.32\ in^3$

$\sigma = \frac{(22773)(2.25)}{6.32} = 8107\ psi < 18\ ksi$ OK

∴ 1/4" FILLET WELD IS ACCEPTABLE.

KAISER ENGINEERS HANFORD

DESIGN ANALYSIS

Calc. No. M-2
Revision 0
Page No. 7 of 22

Client	WO/Job No. E40690		
Subject	Date 5/28/97	By CM KELLER	
	Checked 5/28/97	By DA MOODY	
Location	Revised	By	

CHECK STRESS IN CONCRETE ANCHORS AND BASE PLATE:

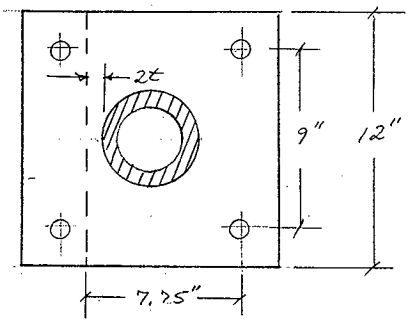

PLATE THICKNESS t = .5

Use conservative bending to occur a distance 2t from PIPE O.D.

ANCHORS ARE ϕ5/8 HILTI KWIK-BOLT II, 2 3/4" EMBEDMENT, CONCRETE IS 3000 psi minimum compressive STRENGTH

MINIMUM ANCHOR SPACING: 8.03" OK ref 9, STD. EMBEDMENT

MINIMUM EDGE DISTANCE: 8.26" OK

ALLOWABLE LOADS PER ANCHOR $T_{ALL} = 1749^{\#}$

$V_{ALL} = 2518^{\#}$

$$\frac{V}{V_{ALL}} + \frac{T}{T_{ALL}} \leq 1.0$$

$$V = \frac{542}{4} = 136^{\#}$$

$$M = 2T(7.75'')$$

$$22773 \text{ in-lb} = 2T(7.75'') \Rightarrow T = 1469^{\#}$$

$$\frac{136}{2518} + \frac{1469}{1749} = .89 < 1.0 \quad OK$$

ANCHORS ARE ACCEPTABLE

KAISER ENGINEERS
HANFORD

DESIGN ANALYSIS

Calc. No. M-2
Revision 0
Page No. 8 of 22

Client	WO/Job No. E40690		
Subject	Date 5/28/97	By CM KELLER	
	Checked 5/28/97	By DA MOODY	
Location	Revised	By	

STRESS IN BASEPLATE DUE TO APPLIED MOMENT,

$$I = \frac{bh^3}{12} = \frac{12(.5)^3}{12} = .125 \text{ in}^4$$

$C = .25$

$$\sigma = \frac{22773(.25)}{.125} = 45\,546 \text{ psi} > 22\text{ksi}$$ NOT ACCEPTABLE

CHECK BASEPLATE USING 3/4" THICKNESS

$$I = \frac{12(.75)^3}{12} = .422 \text{ in}^4, \quad C = .375$$

$$\sigma = \frac{22773(.375)}{.422} = 20{,}236 \text{ psi} < 22\text{ksi} \quad \text{OK}$$

∴ 3/4" THICK BASEPLATE IS REQUIRED

CHECK SLIDING OF CONCRETE SUPPORT BASES:

PASSIVE EARTH PRESSURE $P_p = \gamma h \tan^2(45 + \phi/2)$ ref 11

where, γ = SOIL DENSITY 100 #/ft³
h = DEPTH 1'
ϕ = friction Angle 30°

$$P_p = (100\ \#/ft^3)(1\ ft)\tan^2(45 + 30/2) = 300\ \#/ft$$

ALLOWABLE SOIL LOADING $R_p = P_p A$

$$R_p = 300\ \#/ft^2(1' \cdot 3') = 900^{\#} > 542^{\#} \quad \text{OK}$$

PIPE SUPPORTS WILL NOT MOVE DUE TO APPLIED HORIZONTAL LOADS.

KAISER ENGINEERS
HANFORD

Calc. No. M-2
Revision 0
Page No. 9 of 22

DESIGN ANALYSIS

Client	WO/Job No. E40690	
Subject	Date 5/28/97	By CM KELLER
	Checked 5/28/97	By DA MOODY
Location	Revised	By

ANALYZE HORIZONTAL STRUT PIPE SUPPORT:

HORIZONTAL REACTION LOAD FROM AUTOPIPE ANALYSIS

SUPPORT B65 $F_z = 614^{\#}$

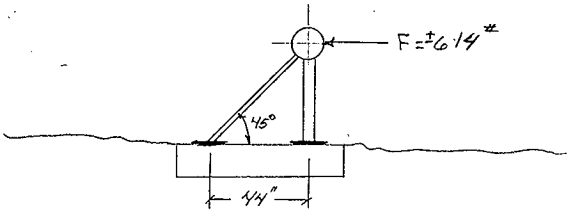

FORCE ON STRUT: $F = \frac{614}{.707} = \pm 868^{\#}$

ALLOWABLE STRUT LOAD IS $4500^{\#}$

$868^{\#} < 4500$ OK

CHECK ANCHORAGE OF SUPPORT TO CONCRETE BASE

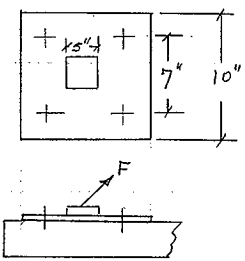

1/4" THK A36 PLATE

$F = 911^{\#}$

$T = .707\,F = 644^{\#}$

$V = .707\,F = 644^{\#}$

BASE PLATE ANCHORED TO CONCRETE USING ϕ 3/8 HILTI KWIK BOLT II W/ 1 5/8" EMBEDMENT.

KAISER ENGINEERS
HANFORD

DESIGN ANALYSIS

Calc. No. M-2
Revision 0
Page No. 10 of 22

Client	WO/Job No. E40690	
Subject	Date 5/28/97	By CM KELLER
	Checked 5/28/97	By DA MOODY
Location	Revised	By

ANCHOR INFORMATION: ref 9 3000psi Concrete

MIN EMBEDMENT: 1 5/8" OK

MIN SPACING: 4.5" OK

MIN EDGE DISTANCE: 4.88" OK

ALLOWABLE TENSION: 609#

ALLOWABLE SHEAR: 780#

$$\frac{T}{T_{ALL}} + \frac{V}{V_{ALL}} \leq 1.0$$

$$\left.\begin{aligned} T &= \frac{644}{4} = 161^{\#} \\ V &= \frac{644}{4} = 161^{\#} \end{aligned}\right\} \quad \frac{161}{609} + \frac{161}{780} = .47 < 1.0 \quad OK$$

CHECK STRESS IN BASE PLATE:

ref 10, Table 26, Case 1C

Simply Supported SQUARE PLATE WITH UNIFORM LOADING OVER CENTER SQUARE AREA.

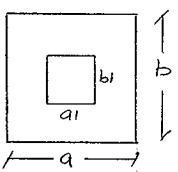

$a_1 = b_1 = 5''$

$a = b = 7''$

$t = .25''$

$W = 644^{\#}$

$$\sigma = \frac{\beta W}{t^2} \quad w/\ \beta = .51 \text{ FROM INTERPOLATION OF TABLE VALUES}$$

$$\sigma = \frac{.51(644)}{(.25)^2} = 5255 \text{ psi} < 22 \text{ ksi} \quad OK$$

KAISER ENGINEERS
HANFORD

Calc. No. M-2
Revision 0
Page No. 11 of 22

DESIGN ANALYSIS

Client	WO/Job No. E40690	
Subject	Date 5/28/97	By CM KELLER
	Checked 5/28/97	By DA MOODY
Location	Revised	By

ANALYZE WIND LOADING ON DUCTWORK:

$F = q_z G_h C_f A_f$ w/2

$q_z = .00256 \; K_z (IV)^2$

$K_z = .80$ TABLE 6

$I = 1.0$

$V = 80$ MPH

$q_z = .00256 (.80)(1.80)^2 = 13.1$

$G_h = 1.32$ TABLE 8 EXP. C

$C_f = 1.2$ TABLE 13

$A = (10/12)(1'') = .83 \; ft^2$ per ft of insulated duct

$F = (13.1)(1.32)(1.2)(.83) = 17.22$ #/ft of DUCT

FOR 20' SPACING BETWEEN SUPPORTS THE HORIZONTAL FORCE DUE TO WIND LOADING IS $(20')(17.22 \#/ft) = 344\#$

DETERMINE STRESS ON ϕ6" DUCT PIPING DUE TO WIND LOADING:

ANALYZE PIPE AS SIMPLY SUPPORTED BEAM SUBJECTED TO DISTRIBUTED LOADING $W = 17.22$ #/ft

KAISER ENGINEERS
HANFORD

Calc. No. M-2
Revision 0
Page No. 12 of 22

DESIGN ANALYSIS

Client	WO/Job No. E40690	
Subject	Date 5/28/97	By CM KELLER
	Checked 5/28/97	By DA MOODY
Location	Revised	By

6" Sch 40 Pipe : $I = 28 \text{ in}^4$

O.D. = 6.625 $\Rightarrow c = 3.313$

$$M = \frac{w l^2}{8} = \frac{17.22 \ (20)^2}{8} = 861 \text{ ft}\cdot\text{lb} \quad \text{ref } 7$$

$$\sigma = \frac{Mc}{I} = \frac{(861 \text{ ft}\cdot\text{lb})(12 \text{ in/ft})(3.313")}{28 \text{ in}^4} = 1223 \text{ psi}$$

$1223 < 21 \text{ ksi}$ OK

∴ Pipe will not buckle due to wind loading

KAISER ENGINEERS
HANFORD

Calc. No. M-2
Revision 0
Page No. 13 of 22

DESIGN ANALYSIS

Client	WO/Job No.	E40690	
Subject	Date 5/28/97	By	CM KELLER
	Checked 5/28/97	By	DA MOODY
Location	Revised	By	

EVALUATE STRESS ON EXHAUSTER INLET

USE RESTRAINT REACTIONS FROM AUTOPIPE ANALYSIS POINT A.00 IN ATTACHMENT.

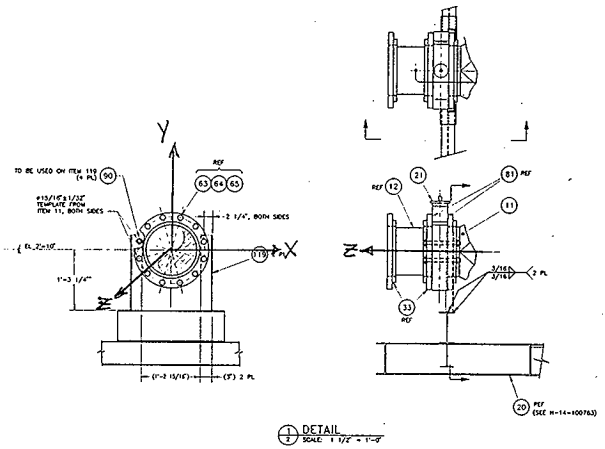

CHECK STRESS ON INLET SUPPORT (PN 119 ABOVE).

Support IS 3X2X1/4 CS ANGLE ASTM A36

ANGLE PROPERTIES: ref 3

$A = 1.19\ in^2$

$I_{xx} = .392\ in^4$

$S_{xx} = .260\ in^3$

$I_{zz} = 1.09\ in^4$

$S_{zz} = .542\ in^3$

$\sigma_y = 36\ ksi$

$\sigma_{all} = .6(\sigma_y) = 22\ ksi$

KAISER ENGINEERS
HANFORD

DESIGN ANALYSIS

Calc. No. M-2
Revision 0
Page No. 14 of 22

Client	WO/Job No. E-40690	
Subject	Date 5/28/97	By CM KELLER
	Checked 5/22/97	By DA MOODY
Location	Revised	By

REACTIONS ON EXHAUSTER INLET: (FROM AUTOPIPE ANALYSIS)

$F_x = 30^{\#}$ $\quad M_x = 105$ ft·lb

$F_y = 302^{\#}$ $\quad M_y = 16$ ft·lb

$F_z = 45^{\#}$ $\quad M_z = 115$ ft·lb

Reactions on inlet support are as follows:

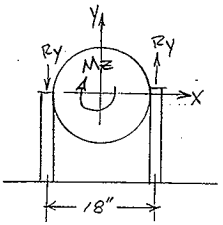

Reaction due to M_z:

$115 \text{ ft·lb} = 2\, R_y (9/12') \Rightarrow R_y = 77^{\#}$

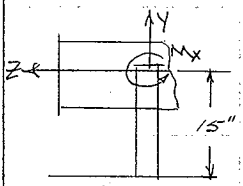

Reaction Due to M_x

$105 \text{ ft·lb} = 2\, R_z (15/12') \Rightarrow R_z = 42^{\#}$

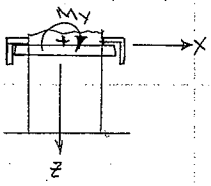

Reaction Due to M_y

$16 \text{ ft·lb} = 2\, R_z (18/12') \Rightarrow R_z = 5^{\#}$

TOTAL SUPPORT FORCES:

$FX = 30^{\#} +$

$FY = 302^{\#} + 77 = 379^{\#}$

$FZ = 45^{\#} + 42 + 5 = 92^{\#}$

DESIGN ANALYSIS

Client	WO/Job No. E40690		
Subject	Date 5/28/97	By CM KELLER	
	Checked 5/28/97	By DA MOODY	
Location	Revised	By	

For Combined compression and bending stresses,

$$\frac{\sigma_a}{S_a} + \frac{\sigma_{bx}}{S_{bx}} + \frac{\sigma_{bz}}{S_{bz}} \leq 1 \qquad \text{ref 3 eq. H1-3}$$

where σ_a = Axial Compressive Stress

σ_{bx} = Bending Stress in x-dir.

σ_{bz} = Bending Stress in z-dir.

S_a, S_{bx}, S_{bz} = ALLOWABLE STRESSES = 22 ksi

$$\sigma_a = \frac{F_Y}{A} = \frac{379^{\#}}{1.19\,in^2} = 318\ psi$$

$$\sigma_{bx} = \frac{F_X(15'')}{S_{xx}} = \frac{30(15)}{.260\,in^3} = 1731\ psi$$

$$\sigma_{bz} = \frac{F_Z(15'')}{S_{zz}} = \frac{92^{\#}(15'')}{.542\,in^3} = 2546\ psi$$

$$\frac{318}{22000} + \frac{1731}{22000} + \frac{2546}{22000} = .21 < 1.0 \quad \text{OK}$$

KAISER ENGINEERS
HANFORD

DESIGN ANALYSIS

Calc. No. M-2
Revision 0
Page No. 16 of 22

Client	WO/Job No. E40690	
Subject	Date 5/28/97	By CM KELLER
	Checked 5/28/97	By DA MOODY
Location	Revised	By

Analyze DUCTWORK FOR DESIGN BASE MISSILE IMPACT.

MISSILE DEFINED AS 2"x4" WOODEN PLANK WITH 15# WEIGHT AND 50mph VELOCITY.

Determine minimum THICKNESS OF STEEL TO PREVENT PENETRATION.

$$t = 1.25 \frac{\left(\frac{MV^2}{2}\right)^{2/3}}{672D}$$

ref 8
eq 2-7 & 2-8

where, M = MISSILE MASS = 15/32.2 = .466

V = MISSILE VELOCITY = 50mph = 73.33 ft/s

D = Equiv. Diameter of MISSILE

$(2")(4") = \pi/4\, D^2 \Rightarrow D = 3.2"$

$$t = 1.25 \frac{\left(\frac{.466(73.33)^2}{2}\right)^{2/3}}{672(3.2)} = .064" < .180" \text{ OK}$$

VENTILATION DUCT IS COMPRISED OF 6" sch 40 and 12" sch 10 PIPE AND FITTINGS. WALL THICKNESSES ARE .280" AND .180" RESPECTIVELY.

∴ MISSILE PENETRATION IS NOT A CONCERN.

KAISER ENGINEERS
HANFORD

Calc. No. M-2
Revision 0
Page No. 17 of 22

DESIGN ANALYSIS

Client	WO/Job No. E40690	
Subject	Date 5/28/97	By CM KELLER
	Checked 5/28/97	By DA MOODY
Location	Revised	By

CALCULATE EXPECTED PRESSURE FROM ATMOSPHERE TO EXHAUSTER INLET FOR BOTH RUNS OF DUCTWORK.

Use Saturated Air at 140°F

Use Q = 250 CFM PER DUCT RUN

Assume 1" WG PRESSURE DROP FOR INLET FILTER.

DETERMINE ΔP FOR THE FOLLOWING:

1) INLET HEPA FILTER AND RISER
2) OUTLET RISER AND TEE CONNECTION
3) DUCTWORK RISER TO EXHAUSTER - LONG RUN
4) DUCTWORK RISER TO EXHAUSTER - SHORT RUN
5) EXHAUSTER INLET FITTING

INLET FILTER AND RISER
(TYPICAL ARRANGEMENT)

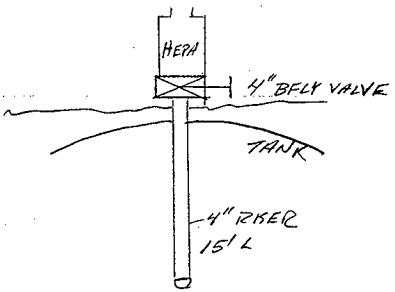

LOSSES

HEPA FILTER ΔP = 1" WG.

BFLY VALVE L_e = 23'

TANK RISER L = 15'

INLET LOSS L_e = 20'

KAISER ENGINEERS
HANFORD

Calc. No. M-2
Revision 0
Page No. 18 of 22

DESIGN ANALYSIS

Client	WO/Job No. E40690		
Subject	Date 5/28/97	By CM KELLER	
	Checked 5/28/97	By DA MOODY	
Location	Revised	By	

OUTLET RISER AND TEE CONNECTION:

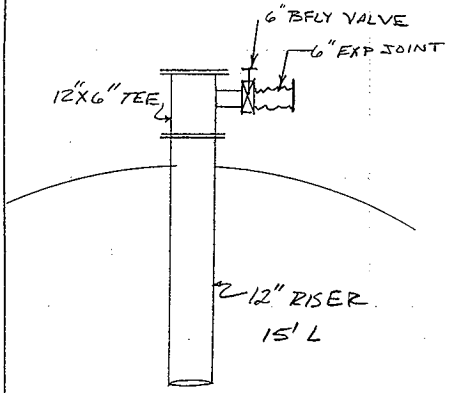

ASSUME LOSS FOR SIDE OUTLET ON A 12X6 REDUCING TEE IS EQUIVALENT TO A 12" SIDE OUTLET TEE FOLLOWED BY A 12X6 CONTRACTION.

EXIT LOSS $L_e = 47'$ ref 4
12" RISER $L = 15'$
12" SIDE OUT TEE $L_e = 60'$
12X6 CONTRACTION $L_e = 11'$
6" BFLY VALVE $L_e = 23'$
6" EXP JOINT $L_e = 8'$ ESTIMATED

DUCT WORK - LONG RUN:

COMPRISED OF FOLLOWING:

2 EA 6" 90° ELBOW $L_e = 10'$ EACH
1 EA 6" 45° ELBOW $L_e = 8'$ EACH
6" PIPE $L = 140'$

KAISER ENGINEERS
HANFORD

DESIGN ANALYSIS

Calc. No. M-2
Revision 0
Page No. 19 of 22

Client	WO/Job No. E40690		
Subject	Date 5/28/97	By CM KELLER	
	Checked 5/28/97	By DA MOODY	
Location	Revised	By	

DUCT WORK - SHORT RUN:

1 ea 6" 90° ELBOW $L_e = 10'$

6" PIPE $L = 10'$

EXHAUSTER INLET FITTING: ref 5

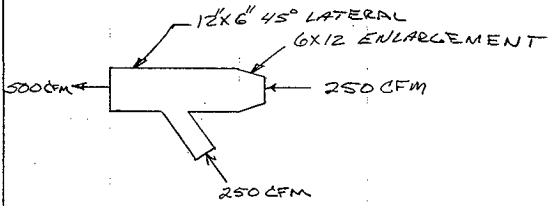

USE TABULATED LOSS COEFFICIENTS FOR 30° WYE w/ ENLARGEMENT

SIDE INLET LOSS Coefficient $C_b = 0.75$ EDS-1, 32.30

IN-LINE INLET LOSS Coefficient $C_s = 0.19$ EDS-1, 32.30

CALCULATE LOSS: $\Delta P = C\, P_v$ Sect 32 eq. 29

ΔP = Pressure Loss (in W.G.)

C = Loss Coefficient (DIMENSIONLESS)

P_v = Velocity Pressure (in WG)

$$P_v = \rho \left(\frac{V}{1097}\right)^2$$

V = Velocity (fpm)

ρ = Air density (lbm/ft^3)

KAISER ENGINEERS
HANFORD

DESIGN ANALYSIS

Calc. No. M-2
Revision 0
Page No. 20 of 22

Client	WO/Job No. E40690	
Subject	Date 5/28/97	By CM KELLER
	Checked 5/28/97	By DA MOODY
Location	Revised	By

For Sat Air @ 140°F

$\rho = .0613$ lbm/ft³ from Calc. M-1

$V = 1246$ fpm w/ 250 CFM in 6" sch 40

$p_v = .0613 \left(\frac{1246}{1097}\right)^2 = .0791$ in WG

$\Delta p = .0791 (.75) = .06$ in WG SIDE INLET

$\Delta p = .0791 (.19) = .02$ in WG IN-LINE INLET

Determine Pressure loss for 250 CFM IN 12", 6", 4" DUCT

$\Delta p = f \left(\frac{12L}{D}\right) \rho \left(\frac{V}{1097}\right)^2$ ref. 5

Δp = pressure loss (in. WG)

f = friction factor

L = Duct Length (ft)

D = Duct Diameter (in)

V = Velocity (fpm)

ρ = Density (lbm/ft³) = .0613 lb/ft³

$Re = \frac{VD}{\nu}$

ν = Kinematic Viscosity = 2.12E-4

KAISER ENGINEERS
HANFORD

Calc. No. M-2
Revision 0
Page No. 21 of 22

DESIGN ANALYSIS

Client	WO/Job No. E40690		
Subject	Date 5/28/97	By CM KELLER	
	Checked 5/28/97	By DA MOODY	
Location	Revised	By	

$$V = \frac{250}{\pi/4\,(4/12)^2} = 2865 \text{ fpm w/ 4" DUCT}$$

$$= 1246 \text{ fpm w/ 6" DUCT}$$

$$= 318 \text{ fpm w/ 12" DUCT}$$

$$Re = \frac{2865\,(4/12)}{(2.12E{-}4)(60)} = 7.5\,E4 \text{ w/ 4" DUCT}$$

$$= 4.9\,E4 \text{ w/ 6" DUCT}$$

$$= 2.5\,E4 \text{ w/ 12" DUCT}$$

ROUGHNESS $\epsilon = .00015'$ (STEEL DUCT)

$$\epsilon/D = \frac{.00015}{4/12} = .0005 \text{ w/ 4" DUCT}$$

$$= .0003 \text{ w/ 6" DUCT}$$

$$= .00015 \text{ w/ 12" DUCT}$$

OBTAIN FRICTION FACTORS FROM MOODY DIAGRAM

$f = .021$ w/ 4" DUCT

$= .022$ w/ 6" DUCT

$= .024$ w/ 12" DUCT

Compute ΔP for 100' of 4" DUCT WITH 250 CFM

$$\Delta P = f\left(\frac{12L}{D}\right)\rho\left(\frac{V}{1097}\right)^2$$

$$\Delta p = .021\left(\frac{12 \cdot 100}{4}\right)(.0613)\left(\frac{2865}{1097}\right)^2 = 2.6 \text{ in wg/100'}$$

Compute Δp for 100' of 6" DUCT WITH 250 CFM

$$\Delta p = .022\left(\frac{1200}{6}\right)(.0613)\left(\frac{1246}{1097}\right)^2 = 0.35 \text{ in wg/100'}$$

KAISER ENGINEERS
HANFORD

DESIGN ANALYSIS

Calc. No. M-2
Revision 0
Page No. 22 of 22

Client	WO/Job No. E40690	
Subject	Date 5/28/97	By CM KELLER
	Checked 5/28/97	By DA MOODY
Location	Revised	By

Compute ΔP for 100' of 12" DUCT WITH 250 CFM

$$\Delta p = .024\left(\frac{1200}{12}\right)(.0613)\left(\frac{318}{1097}\right)^2 = .01 \text{ in WG}/100'$$

NOW CALCULATE Δp from ATMOSPHERE TO EXHAUSTER INLET FOR EACH RUN.

SX-102 LONG RUN, TANK INLET TO EXHAUSTER.

$$\Delta p = 1'' \text{WG} + (23+15+20)(2.6 \text{ in WG}/100') + (47+15+60+11)(.01 \text{ in WG}/100')$$
$$+ (23'+8'+10'+10'+8'+140')(.35 \text{ in WG}/100') + .06 \text{ in WG}$$

$\Delta p = 3.28$ in WG.

SX-103 SHORT RUN, TANK INLET TO EXHAUSTER

$$\Delta p = 1'' \text{WG} + (23+15+20)(2.6 \text{ in WG}/100') + (47+15+60+11)(.01 \text{ in WG}/100')$$
$$+ (23+8+10+10)(.35 \text{ in WG}/100') + .02 \text{ in WG}$$

$\Delta p = 2.72$ in WG

∴ APPROXIMATELY ½" W.G. DIFFERENCE BETWEEN LONG AND SHORT DUCT RUNS. BALANCING SHOULD NOT BE A PROBLEM. LOSS FOR TANK INLET (ATM. TO TANK DOME) Comprises THE MAJORITY OF LOSS AT 2.5" W.G.

```
  *                        *******   **  *******   *******
 ***            **        **    **  **  **    **  **
 ** **         ******      **    **  **  **    **  **
 **   **   **  **  **  *****  *******  **  *******  *****
*********   **  **  **  **  **  **     **  **     **
**       **  **  **  **  **  **  **     **  **     **
**       **  *****   **   *****  **     **  **     *******
```

Pipe Stress Analysis and Design Program

Version: 4.60.03

Edition: Plus-DOS

Developed and Maintained by

Engineering Design Automation, Inc.
1600 Riviera Ave., Suite 300
Walnut Creek, CA 94596


```
*************************************************************
**                                                         **
**            AUTOPIPE SYSTEM DATA LISTING                 **
**                                                         **
*************************************************************
```

SYSTEM NAME : SX103

PROJECT ID : EXHAUSTOR PIPING

PREPARED BY : H. P. Shrivastava 3/25/97
H. SHRIVASTAVA

CHECKED BY : M. Ahmed
M.M. AHMED

PIPING CODE : B31.3

AMBIENT TEMP. (deg F) : 70.0

COMPONENT LIBRARY : AUTOPIPE

MATERIAL LIBRARY : AUTOB313

MODEL REVISION NUMBER : 14

POINT DATA LISTING

POINT NAME	TYPE	OFFSETS (ft) X	Y	Z	PIPE ID	DESCRIPTION
*** SEGMENT A						
A00	Run	0	0	0	12-IN	
A01	Flex	0	0	0.25		Wt= 137 lb , Ar= 120.6 sq.in Axial= 282.0 Tors= 14417.0 Y-Shear= 1665.0 Bend= 10.0 Z-Shear= 1665.0 Bend= 10.0
A02	Run	0	0	1.00		
A06	Run	0	0	0.63		
A10	Tee	0	0	0.62		
A15	Redu	0	0	1.68		
A20	Run	0	0	0.67	6-IN	
A25	Run	0	0	4.50		
A30	Run	0	0	4.42		
A35	Bend	0	0	1.88		Long Elbow, Radius = 9.00 inch Bend angle change = 90.00 deg SIF - In 2.27, Out = 1.89 Flex = 6.590
A45	Run	2.01	0	0		
A50	Run	2.00	0	0		
*** SEGMENT B						
A10	Tee	0	0	2.50	6-IN	
B05	Run	-1.50	0	1.33		
B10	Bend	-1.50	0	1.32		Long Elbow, Radius = 9.00 inch Bend angle change = 48.65 deg SIF - In 2.27, Out = 1.89 Flex = 6.590
B15	Run	0	0	5.50		
B20	Run	0	0	5.50		
B25	Run	0	0	10.00		
B30	Run	0	0	10.00		
B35	Run	0	0	10.00		
B40	Run	0	0	10.00		
B45	Run	0	0	10.00		
B50	Run	0	0	9.38		
B55	Bend	0	0	4.00		Long Elbow, Radius = 9.00 inch Bend angle change = 90.00 deg SIF - In 2.27, Out = 1.89 Flex = 6.590
B60	Run	4.50	0	0		
B65	Run	4.50	0	0		
B70	Run	4.50	0	0		
B75	Bend	4.50	0	0		Long Elbow, Radius = 9.00 inch Bend angle change = 90.00 deg SIF - In 2.27, Out = 1.89

POINT DATA LISTING

POINT NAME	TYPE	OFFSETS (ft) X	Y	Z	PIPE ID	DESCRIPTION
						Flex = 6.590
B80	Run	0	0	4.00		
B85	Run	0	0	8.00		
B90	Run	0	0	10.00		
B95	Run	0	0	10.00		
B100	Run	0	0	10.00		
B105	Flex	0	0	3.00		Wt= 41 lb , Ar= 28.9 sq.in Axial= 240.0 Tors= 1833.0 Y-Shear= 338.0 Bend= 2.3 Z-Shear= 338.0 Bend= 2.3
B110	Run	0	0	0.89		
B115	Run	0	0	1.11		

Total weight of empty pipes : 3539 lb

COMPONENT DATA LISTING

POINT NAME	---COORDINATE(ft)--- X	Y	Z	DATA TYPE	DESCRIPTION
*** SEGMENT A					
A00	0.00	0.00	0.00	ANCHOR	Rigid
					Thermal movements : None
					2 mass point(s)
A01	0.00	0.00	0.25		2 mass point(s)
				FLANGE	Weld neck SIF = 1.00
					Rating = 150, Weight = 80 lb
A02	0.00	0.00	1.25		2 mass point(s)
				FLANGE	Weld neck SIF = 1.00
					Rating = 150, Weight = 80 lb
A06	0.00	0.00	1.88	GUIDE	ID : A06 1, Connected to Ground
					Stiffness = RIGID
					Gap-down = 0.00, Above = 0.13 inch
					Gap-left = 0.13, Right = 0.13 inch
					Friction = 0.20
					Gaps set Weightless
					2 mass point(s)
A10	0.00	0.00	2.50	TEE	B16.9 welding tee
					SIF - In = 2.94, Out = 3.58
					2 mass point(s)
A15	0.00	0.00	4.17		2 mass point(s)
A20	0.00	0.00	4.84		2 mass point(s)
A25	0.00	0.00	9.34		2 mass point(s)
A30	0.00	0.00	13.76	GUIDE	ID : A30 1, Connected to Ground
					Stiffness = RIGID
					Gap-down = 0.00, Above = 0.13 inch
					Gap-left = 0.13, Right = 0.13 inch
					Friction = 0.20
					Gaps set Weightless
					2 mass point(s)
A35 N	0.00	0.00	14.89		2 mass point(s)
A35	0.00	0.00	15.64	TI	
A35 F	0.75	0.00	15.64		2 mass point(s)
A45	2.01	0.00	15.64		2 mass point(s)
A50	4.01	0.00	15.64	ANCHOR	Rigid
					Thermal movements : None
*** SEGMENT B					
A10	0.00	0.00	2.50	TEE	B16.9 welding tee
					SIF - In = 2.94, Out = 3.58
					2 mass point(s)
B05	-1.50	0.00	3.82		2 mass point(s)
B10 N	-2.75	0.00	4.92		2 mass point(s)
B10	-3.00	0.00	5.14	TI	
B10 F	-3.00	0.00	5.48		2 mass point(s)
B15	-3.00	0.00	10.64		2 mass point(s)
B20	-3.00	0.00	16.14	GUIDE	ID : B20 1, Connected to Ground
					Stiffness = RIGID
					Gap-down = 0.00, Above = 0.13 inch

COMPONENT DATA LISTING

POINT NAME	---COORDINATE(ft)--- X	Y	Z	DATA TYPE	DESCRIPTION
					Gap-left = 0.13, Right = 0.13 inch
					Friction = 0.20
					Gaps set Weightless
					2 mass point(s)
B25	-3.00	0.00	26.14		2 mass point(s)
				FLANGE	Weld neck SIF = 1.00
					Rating = 150, Weight = 24 lb
B30	-3.00	0.00	36.14	GUIDE	ID : B30 1, Connected to Ground
					Stiffness = RIGID
					Gap-down = 0.00, Above = 0.13 inch
					Gap-left = 0.13, Right = 0.13 inch
					Friction = 0.20
					Gaps set Weightless
					2 mass point(s)
B35	-3.00	0.00	46.14		2 mass point(s)
				FLANGE	Weld neck SIF = 1.00
					Rating = 150, Weight = 24 lb
B40	-3.00	0.00	56.14	GUIDE	ID : B40 1, Connected to Ground
					Stiffness = RIGID
					Gap-down = 0.00, Above = 0.13 inch
					Gap-left = 0.13, Right = 0.13 inch
					Friction = 0.20
					Gaps set Weightless
					2 mass point(s)
B45	-3.00	0.00	66.14		2 mass point(s)
				FLANGE	Weld neck SIF = 1.00
					Rating = 150, Weight = 24 lb
B50	-3.00	0.00	75.52	GUIDE	ID : B50 1, Connected to Ground
					Stiffness = RIGID
					Gap-down = 0.00, Above = 0.13 inch
					Gap-left = 0.13, Right = 0.13 inch
					Friction = 0.20
					Gaps set Weightless
					2 mass point(s)
B55 N	-3.00	0.00	78.77		2 mass point(s)
B55	-3.00	0.00	79.52	TI	
B55 F	-2.25	0.00	79.52		2 mass point(s)
B60	1.50	0.00	79.52		2 mass point(s)
B65	6.00	0.00	79.52	GUIDE	ID : B65 1, Connected to Ground
					Stiffness = RIGID
					Gap-down = 0.00, Above = 0.13 inch
					Gap-left = 0.13, Right = 0.13 inch
					Friction = 0.20
					Gaps set Weightless
					2 mass point(s)
B70	10.50	0.00	79.52		2 mass point(s)
				FLANGE	Weld neck SIF = 1.00
					Rating = 150, Weight = 24 lb
				FLANGE	Weld neck SIF = 1.00

COMPONENT DATA LISTING

```
POINT   ---COORDINATE(ft  )---  DATA
NAME     X       Y       Z      TYPE  DESCRIPTION
----- ------- ------- ------- ------ ------------------------------------
                                      Rating = 150, Weight = 24 lb
B75 N   14.25    0.00   79.52         2 mass point(s)
B75     15.00    0.00   79.52 TI
B75 F   15.00    0.00   80.27         2 mass point(s)
B80     15.00    0.00   83.52 GUIDE   ID : B80  1, Connected to Ground
                                      Stiffness = RIGID
                                      Gap-down = 0.00, Above = 0.13 inch
                                      Gap-left = 0.13, Right = 0.13 inch
                                      Friction = 0.20
                                      Gaps set Weightless
                                      2 mass point(s)
B85     15.00    0.00   91.52         2 mass point(s)
                              FLANGE Weld neck          SIF = 1.00
                                      Rating = 150, Weight = 24 lb
B90     15.00    0.00  101.52 GUIDE   ID : B90  1, Connected to Ground
                                      Stiffness = RIGID
                                      Gap-down = 0.00, Above = 0.13 inch
                                      Gap-left = 0.13, Right = 0.13 inch
                                      Friction = 0.20
                                      Gaps set Weightless
                                      2 mass point(s)
B95     15.00    0.00  111.52         2 mass point(s)
                              FLANGE Weld neck          SIF = 1.00
                                      Rating = 150, Weight = 24 lb
B100    15.00    0.00  121.52 GUIDE   ID : B100 1, Connected to Ground
                                      Stiffness = RIGID
                                      Gap-down = 0.00, Above = 0.13 inch
                                      Gap-left = 0.13, Right = 0.13 inch
                                      Friction = 0.20
                                      Gaps set Weightless
                                      2 mass point(s)
B105    15.00    0.00  124.52         2 mass point(s)
B110    15.00    0.00  125.41         2 mass point(s)
B115    15.00    0.00  126.52 ANCHOR Rigid
                                      Thermal movements : None
```

Number of points in the system : 128

PIPE DATA LISTING

```
Pipe ID/      Nom/ O.D.  -----Thickness(inch)-----  Spec   Weight(lb/ft )
Material      Sch  inch  W.Th. Corr Mill Insu Ling  Grav  Pipe  Other Total
------------  ---- ----- ----- ---- ---- ---- ----  ----  ----  ----- -----
12-IN          12 12.750 0.180    0 0.02 2.00    0     0  24.73  4.51 29.24
A312-TP304L   10S

6-IN            6  6.625 0.280    0 0.04 2.00    0     0  19.42  2.63 22.05
A312-TP304L   40
```

M A T E R I A L D A T A L I S T I N G

Material Name	Pipe ID	Density lb/cu.ft	Pois. Ratio	Temper. deg F	Modulus E6 psi	Expans. in/100ft	Allow. psi
A312-TP304L	12-IN	501.0	0.30	70.0	28.30		16700.0
				150.0		0.8985	16700.0
A312-TP304L	6-IN	501.0	0.30	70.0	28.30		16700.0
				150.0		0.8985	16700.0

TEMPERATURE AND PRESSURE DATA

POINT NAME	CASE 1 PRESS. psi	CASE 1 TEMPER deg F	CASE 1 EXPAN. in/100ft	CASE 2 PRESS. psi	CASE 2 TEMPER deg F	CASE 2 EXPAN. in/100ft	CASE 3 PRESS. psi	CASE 3 TEMPER deg F	CASE 3 EXPAN. in/100ft
*** SEGMENT A									
A00	50.00	150	0.898						
A20	50.00	150	0.898						
A50	50.00	150	0.898						
*** SEGMENT B									
A10	50.00	150	0.898						
B115	50.00	150	0.898						

A N A L Y S I S S U M M A R Y

Current model revision number : 14

```
Static - Date and Time of analysis ............ Mar 25, 1997   1:16 PM
         Model Revision Number ................ 14
         Number of load cases ................. 3
         Load cases analyzed .................. GR T1 P1
         Gaps/Friction/Yielding considered ..... Yes
         Tolerance - Force, Displacement ...... 100.00 lb   0.0162 in
         Friction - Factor, tolerance ......... 1.00   0.10
         Hanger design run .................... No
         Cut short included ................... No
         Occasional load analysis type ........ Nonlinear
         Non-linear analysis summary file ..... SX103.LOG
         Base load cases for nonlinear analysis
                                                  GR = None
                                                  T1 = GR
                                                  P1 = T1
         Weight of contents included .......... Yes
         Number of mass points per span ....... 2
         Pressure stiffening case ............. 0
         Water elevation for buoyancy loads .... Not considered

Modal  - Date and Time of analysis ............ Mar 25, 1997   1:17 PM
         Model Revision Number ................ 14
         Number of modes ...................... 50
         Cutoff frequency (Hz) ................ 100.0
         Weight of contents included .......... Yes
         Number of mass points per span ....... 2
         Pressure stiffening case ............. 0
         Water elevation for buoyancy loads .... Not considered

Response - Date and Time of analysis ........... Mar 25, 1997   1:17 PM
         Model Revision Number ................ 14
         Number of load cases ................. 1
         Load cases analyzed .................. R1
         Date and time of modal analysis ...... Mar 25, 1997   1:17 PM
         Number of modes ...................... 50
         Cutoff frequency (Hz) ................ 100.0
         Model revision of modal analysis ..... 14
         Weight of contents included .......... Yes
         Number of mass points per span ....... 2
         Pressure stiffening case ............. 0
         Water elevation for buoyancy loads .... Not considered
```


CODE COMPLIANCE COMBINATIONS

Combination	Category	Method	Load	Factor	Allowable	Remarks
GR + Max P	Sustain	Sum	Gravity Max Long	1.00 1.00	Automatic	Default
Cold to T1	Expansion	Sum	Thermal 1	1.00	Automatic	Default
Sus. + R1	Occasion	Abs sum	Response 1 Max Sus	1.00 1.00	Automatic	Default
Max P	Hoop		Max Hoop	1.00	Automatic	Default

OTHER USER COMBINATIONS

Combination	Method	Load	Factor	Remarks
GR	Sum	Gravity	1.00	Default
T1	Sum	Thermal 1	1.00	Default
R1	Sum	Response 1	1.00	Default
GR+T1	Sum	Gravity Thermal 1	1.00 1.00	User
TOTAL	Abs sum	GR+T1 Response 1	1.00 1.00	User

CODE COMPLIANCE

```
Y - Factor ............................ 0.40
Weld efficiency factor ................ 1.00
Range reduction factor ................ 1.00
Design Pressure Factor ................ 1.00
Minimum stress ratio used in reports... 0.00
Include corrosion in stress calcs. .... Y
Include torsion in code stress ........ N
Include axial force in code stress .... N
Longitudinal pressure calculation ..... PD/4t
Include rigorous pressure ............ N
```

RESPONSE SPECTRUM LOAD CASES :

Number of load cases analysed : 1

Load case 1 - R1

Missing mass : Yes
ZPA : No

Combination method : SRSS

X- Spectrum : SC2&3
Multiplier : 1.00

SC2&3

Freq(Hz)	Grav( )	Freq(Hz)	Grav( )	Freq(Hz)	Grav( )
0.100	0.01	0.160	0.02	0.250	0.04
0.400	0.06	0.600	0.09	1.100	0.17
1.640	0.25	8.000	0.25	12.000	0.20
20.000	0.16	33.000	0.12	100.000	0.12

Y- Spectrum : SC2&3
Multiplier : 0.67

SC2&3

Freq(Hz)	Grav( )	Freq(Hz)	Grav( )	Freq(Hz)	Grav( )
0.100	0.01	0.160	0.02	0.250	0.04
0.400	0.06	0.600	0.09	1.100	0.17
1.640	0.25	8.000	0.25	12.000	0.20
20.000	0.16	33.000	0.12	100.000	0.12

Z- Spectrum : SC2&3
Multiplier : 1.00

SC2&3

Freq(Hz)	Grav( )	Freq(Hz)	Grav( )	Freq(Hz)	Grav( )
0.100	0.01	0.160	0.02	0.250	0.04
0.400	0.06	0.600	0.09	1.100	0.17
1.640	0.25	8.000	0.25	12.000	0.20
20.000	0.16	33.000	0.12	100.000	0.12

F R E Q U E N C I E S

Mode Number	Frequency (Rads/sec)	Frequency (Hertz)	Period (Sec)	Participation factors X	Y	Z
1	23.6225	3.7596	0.266	-0.054	0.000	-1.518
2	55.7814	8.8779	0.113	-0.074	0.000	-1.394
3	58.9844	9.3877	0.107	0.179	0.000	1.975
4	68.5801	10.9149	0.092	0.000	0.356	0.000
5	72.6214	11.5581	0.087	0.363	0.000	-0.725
6	73.8770	11.7579	0.085	0.000	-0.193	0.000
7	78.7853	12.5391	0.080	0.365	0.000	0.405
8	89.9684	14.3189	0.070	-0.002	0.000	0.096
9	90.9973	14.4827	0.069	0.000	0.034	0.000
10	94.3148	15.0107	0.067	-0.133	0.000	0.109
11	95.9619	15.2728	0.065	0.000	0.200	0.000
12	97.5786	15.5301	0.064	-0.234	0.000	-0.071
13	97.7475	15.5570	0.064	0.190	0.000	0.001
14	109.5244	17.4313	0.057	0.000	0.566	0.000
15	118.2832	18.8254	0.053	-0.842	0.000	-0.371
16	119.0209	18.9428	0.053	0.000	-0.472	0.000
17	119.0876	18.9534	0.053	-0.329	0.000	0.001
18	122.5601	19.5060	0.051	0.000	0.974	0.000
19	140.1457	22.3049	0.045	0.572	0.000	0.078
20	150.5713	23.9642	0.042	0.000	-1.474	0.000
21	155.4652	24.7431	0.040	-0.009	0.000	-0.045
22	171.0048	27.2163	0.037	-1.777	0.000	0.153
23	176.6926	28.1215	0.036	0.000	-0.065	0.000
24	177.1243	28.1902	0.035	0.413	0.000	-0.028

F R E Q U E N C I E S

Mode Number	Frequency (Rads/sec)	Frequency (Hertz)	Period (Sec)	Participation factors X	Y	Z
25	183.1162	29.1438	0.034	0.000	0.008	0.000
26	195.3884	31.0970	0.032	0.961	0.000	-0.651
27	227.0290	36.1328	0.028	0.000	-0.038	0.000
28	227.3293	36.1806	0.028	-0.032	0.000	0.018
29	236.8217	37.6913	0.027	0.000	1.274	0.000
30	257.3392	40.9568	0.024	0.000	0.517	0.000
31	285.7549	45.4793	0.022	-0.462	0.000	0.029
32	286.9186	45.6645	0.022	0.000	0.599	0.000
33	293.8341	46.7652	0.021	0.205	0.000	0.092
34	302.0745	48.0767	0.021	0.000	0.349	0.000
35	333.7298	53.1147	0.019	-0.038	0.000	0.085
36	350.2766	55.7482	0.018	0.245	0.000	0.169
37	351.2483	55.9029	0.018	0.000	-0.179	0.000
38	369.5284	58.8123	0.017	-0.375	0.000	0.006
39	393.6673	62.6541	0.016	0.000	0.116	0.000
40	395.4388	62.9360	0.016	0.526	0.000	-0.039
41	414.8388	66.0236	0.015	0.000	0.273	0.000
42	422.0515	67.1716	0.015	-0.164	0.000	-0.008
43	425.3665	67.6992	0.015	0.189	0.000	0.040
44	451.2697	71.8218	0.014	0.000	-0.089	0.000
45	489.4187	77.8934	0.013	0.000	0.070	0.000
46	525.1940	83.5872	0.012	-0.035	0.000	0.234
47	532.0986	84.6861	0.012	0.248	0.000	0.391
48	534.3790	85.0491	0.012	0.000	0.193	0.000
49	611.3006	97.2915	0.010	0.000	0.250	0.000

F R E Q U E N C I E S

Mode Number	Frequency (Rads/sec)	Frequency (Hertz)	Period (Sec)	Participation factors X	Y	Z
50	619.1995	98.5487	0.010	0.143	0.000	0.104

SX103 EXHAUSTOR PIPING — FLUOR DANIEL NORTHWEST, INC.
03/25/97 — AutoPIPE+4.60 RESULT PAGE 7

D I S P L A C E M E N T S

Point name	Load combination	TRANSLATIONS (in) X	Y	Z	ROTATIONS (deg) X	Y	Z
*** Segment A begin ***							
A00	GR	0.000	0.000	0.000	0.000	0.000	0.000
	T1	0.000	0.000	0.000	0.000	0.000	0.000
	R1	0.000	0.000	0.000	0.000	0.000	0.000
	GR+T1	0.000	0.000	0.000	0.000	0.000	0.000
	TOTAL	0.000	0.000	0.000	0.000	0.000	0.000
A01	GR	0.000	0.000	0.000	0.000	0.000	0.000
	T1	0.000	0.000	0.002	0.000	0.000	0.000
	R1	0.000	0.000	0.000	0.000	0.000	0.000
	GR+T1	0.000	0.000	0.002	0.000	0.000	0.000
	TOTAL	0.000	0.000	0.002	0.000	0.000	0.000
A02	GR	0.000	0.001	0.000	0.007	0.000	0.020
	T1	0.101	0.000	-0.144	0.000	-0.062	0.000
	R1	0.001	0.000	0.011	0.001	0.011	0.005
	GR+T1	0.101	0.001	-0.144	0.007	-0.062	0.020
	TOTAL	0.102	0.001	0.156	0.008	0.073	0.024
A06	GR	0.000	0.000	0.000	0.007	0.000	0.020
	T1	0.093	0.000	-0.139	0.000	-0.062	0.000
	R1	0.000	0.000	0.011	0.001	0.011	0.005
	GR+T1	0.093	0.000	-0.139	0.007	-0.062	0.020
	TOTAL	0.093	0.000	0.150	0.008	0.073	0.024
A10	GR	0.000	-0.001	0.000	0.007	0.000	0.020
	T1	0.085	0.000	-0.133	0.000	-0.062	0.000
	R1	0.001	0.000	0.011	0.001	0.011	0.005
	GR+T1	0.085	-0.001	-0.133	0.007	-0.062	0.020
	TOTAL	0.086	0.001	0.145	0.008	0.073	0.024
A15	GR	0.000	-0.004	0.000	0.007	0.000	0.019
	T1	0.063	0.000	-0.118	0.000	-0.060	0.000
	R1	0.005	0.000	0.011	0.001	0.009	0.004
	GR+T1	0.063	-0.004	-0.118	0.007	-0.060	0.019
	TOTAL	0.068	0.004	0.129	0.008	0.069	0.024
A20	GR	0.000	-0.005	0.000	0.007	0.000	0.019
	T1	0.055	0.000	-0.112	0.000	-0.059	0.000
	R1	0.006	0.000	0.011	0.001	0.008	0.004
	GR+T1	0.055	-0.005	-0.112	0.007	-0.059	0.019
	TOTAL	0.061	0.005	0.123	0.007	0.067	0.023

SX103 EXHAUSTOR PIPING — FLUOR DANIEL NORTHWEST, INC.
03/25/97 — AutoPIPE+4.60 RESULT PAGE 8

D I S P L A C E M E N T S

Point name	Load combination	TRANSLATIONS (in) X	Y	Z	ROTATIONS (deg) X	Y	Z
A25	GR	0.000	-0.006	0.000	-0.004	0.000	0.012
	T1	0.009	0.000	-0.072	0.000	-0.040	0.000
	R1	0.006	0.001	0.011	0.000	0.006	0.003
	GR+T1	0.009	-0.006	-0.072	-0.004	-0.040	0.012
	TOTAL	0.015	0.006	0.083	0.004	0.046	0.014
A30	GR	0.000	0.000	0.000	-0.005	0.000	0.004
	T1	-0.024	0.000	-0.032	0.000	-0.032	0.000
	R1	0.000	0.000	0.011	0.001	0.005	0.001
	GR+T1	-0.024	0.000	-0.032	-0.005	-0.032	0.004
	TOTAL	0.024	0.000	0.043	0.006	0.038	0.006
A35 N	GR	0.000	0.001	0.000	-0.003	0.000	0.002
	T1	-0.031	0.000	-0.022	0.000	-0.032	0.000
	R1	0.001	0.000	0.011	0.000	0.002	0.001
	GR+T1	-0.031	0.001	-0.022	-0.003	-0.032	0.002
	TOTAL	0.032	0.001	0.033	0.004	0.034	0.003
A35 F	GR	0.000	0.001	0.000	0.000	0.000	-0.002
	T1	-0.029	0.000	-0.010	0.000	-0.024	0.000
	R1	0.000	0.000	0.009	0.000	0.018	0.000
	GR+T1	-0.029	0.001	-0.010	0.000	-0.024	-0.002
	TOTAL	0.029	0.001	0.019	0.000	0.042	0.002
A45	GR	0.000	0.001	0.000	0.000	0.000	-0.002
	T1	-0.018	0.000	-0.004	0.000	-0.018	0.000
	R1	0.000	0.000	0.004	0.000	0.016	0.000
	GR+T1	-0.018	0.001	-0.004	0.000	-0.018	-0.002
	TOTAL	0.018	0.001	0.009	0.000	0.034	0.002
A50	GR	0.000	0.000	0.000	0.000	0.000	0.000
	T1	0.000	0.000	0.000	0.000	0.000	0.000
	R1	0.000	0.000	0.000	0.000	0.000	0.000
	GR+T1	0.000	0.000	0.000	0.000	0.000	0.000
	TOTAL	0.000	0.000	0.000	0.000	0.000	0.000
*** Segment A end ***							
*** Segment B begin ***							
A10	GR	0.000	-0.001	0.000	0.007	0.000	0.020
	T1	0.085	0.000	-0.133	0.000	-0.062	0.000
	R1	0.001	0.000	0.011	0.001	0.011	0.005
	GR+T1	0.085	-0.001	-0.133	0.007	-0.062	0.020
	TOTAL	0.086	0.001	0.145	0.008	0.073	0.024

D I S P L A C E M E N T S

Point name	Load combination	TRANSLATIONS (in) X	Y	Z	ROTATIONS (deg) X	Y	Z
B05	GR	0.000	-0.010	0.000	0.006	0.000	0.023
	T1	0.052	0.000	-0.143	0.000	-0.071	0.000
	R1	0.006	0.002	0.017	0.001	0.020	0.005
	GR+T1	0.052	-0.010	-0.143	0.006	-0.071	0.023
	TOTAL	0.058	0.012	0.159	0.007	0.090	0.028
B10 N	GR	0.000	-0.017	0.000	0.003	0.000	0.024
	T1	0.025	0.000	-0.151	0.000	-0.067	0.000
	R1	0.011	0.004	0.022	0.001	0.019	0.006
	GR+T1	0.025	-0.017	-0.151	0.003	-0.067	0.024
	TOTAL	0.036	0.021	0.173	0.004	0.086	0.029
B10 F	GR	0.000	-0.018	0.000	-0.003	0.000	0.021
	T1	0.016	0.000	-0.149	0.000	-0.045	0.000
	R1	0.012	0.004	0.023	0.000	0.006	0.005
	GR+T1	0.016	-0.018	-0.149	-0.003	-0.045	0.021
	TOTAL	0.028	0.022	0.172	0.004	0.051	0.027
B15	GR	0.000	-0.009	0.000	-0.012	0.000	0.019
	T1	-0.019	0.000	-0.103	0.000	-0.021	0.000
	R1	0.011	0.002	0.023	0.002	0.007	0.005
	GR+T1	-0.019	-0.009	-0.103	-0.012	-0.021	0.019
	TOTAL	0.030	0.012	0.126	0.014	0.028	0.024
B20	GR	0.000	0.000	0.000	0.004	0.000	0.017
	T1	-0.034	0.000	-0.054	0.000	-0.007	0.000
	R1	0.000	0.000	0.023	0.002	0.009	0.005
	GR+T1	-0.034	0.000	-0.054	0.004	-0.007	0.017
	TOTAL	0.034	0.000	0.077	0.006	0.017	0.022
B25	GR	0.000	-0.026	0.000	-0.001	0.000	0.013
	T1	-0.040	0.000	0.035	0.000	0.000	0.000
	R1	0.011	0.003	0.023	0.001	0.002	0.004
	GR+T1	-0.040	-0.026	0.035	-0.001	0.000	0.013
	TOTAL	0.051	0.028	0.059	0.001	0.002	0.017
B30	GR	0.000	0.000	0.000	-0.002	0.000	0.009
	T1	-0.047	0.000	0.125	0.000	-0.009	0.000
	R1	0.000	0.000	0.023	0.002	0.007	0.003
	GR+T1	-0.047	0.000	0.125	-0.002	-0.009	0.009
	TOTAL	0.047	0.000	0.148	0.004	0.016	0.013
B35	GR	0.000	-0.020	0.000	0.000	0.000	0.005
	T1	-0.079	0.000	0.214	0.000	-0.020	0.000
	R1	0.011	0.003	0.023	0.000	0.002	0.003
	GR+T1	-0.079	-0.020	0.214	0.000	-0.020	0.005
	TOTAL	0.090	0.023	0.238	0.001	0.022	0.008

D I S P L A C E M E N T S

Point name	Load combination	TRANSLATIONS (in) X	Y	Z	ROTATIONS (deg) X	Y	Z
B40	GR	0.000	0.000	0.000	0.004	0.000	0.002
	T1	-0.125	0.000	0.304	0.000	-0.022	0.000
	R1	0.000	0.000	0.024	0.002	0.010	0.002
	GR+T1	-0.125	0.000	0.304	0.004	-0.022	0.002
	TOTAL	0.125	0.000	0.328	0.006	0.032	0.004
B45	GR	0.000	-0.031	0.000	0.002	0.000	-0.002
	T1	-0.158	0.000	0.394	0.000	-0.004	0.000
	R1	0.019	0.003	0.024	0.001	0.004	0.002
	GR+T1	-0.158	-0.031	0.394	0.002	-0.004	-0.002
	TOTAL	0.177	0.034	0.417	0.003	0.008	0.004
B50	GR	0.000	0.000	0.000	-0.017	0.000	-0.006
	T1	-0.125	0.000	0.478	0.000	0.042	0.000
	R1	0.000	0.000	0.024	0.003	0.025	0.001
	GR+T1	-0.125	0.000	0.478	-0.017	0.042	-0.006
	TOTAL	0.125	0.000	0.501	0.020	0.067	0.007
B55 N	GR	0.000	0.008	0.000	-0.009	0.000	-0.007
	T1	-0.087	0.000	0.507	0.000	0.075	0.000
	R1	0.020	0.002	0.024	0.003	0.031	0.001
	GR+T1	-0.087	0.008	0.507	-0.009	0.075	-0.007
	TOTAL	0.107	0.010	0.531	0.012	0.106	0.009
B55 F	GR	0.000	0.008	0.000	-0.008	0.000	-0.008
	T1	-0.062	0.000	0.491	0.000	0.185	0.000
	R1	0.025	0.002	0.024	0.003	0.022	0.001
	GR+T1	-0.062	0.008	0.491	-0.008	0.185	-0.008
	TOTAL	0.087	0.010	0.515	0.011	0.207	0.009
B60	GR	0.000	0.003	0.000	-0.009	0.000	-0.004
	T1	-0.028	0.000	0.330	0.000	0.218	0.000
	R1	0.025	0.001	0.025	0.003	0.012	0.001
	GR+T1	-0.028	0.003	0.330	-0.009	0.218	-0.004
	TOTAL	0.053	0.005	0.354	0.011	0.230	0.006
B65	GR	0.000	0.000	0.000	-0.009	0.000	-0.005
	T1	0.012	0.000	0.125	0.000	0.207	0.000
	R1	0.025	0.000	0.000	0.003	0.052	0.001
	GR+T1	0.012	0.000	0.125	-0.009	0.207	-0.005
	TOTAL	0.037	0.000	0.125	0.012	0.259	0.007
B70	GR	0.000	-0.006	0.000	-0.010	0.000	-0.004
	T1	0.052	0.000	-0.051	0.000	0.165	0.000
	R1	0.025	0.001	0.072	0.003	0.091	0.002
	GR+T1	0.052	-0.006	-0.051	-0.010	0.165	-0.004
	TOTAL	0.077	0.008	0.122	0.012	0.256	0.005

SX103 EXHAUSTOR PIPING FLUOR DANIEL NORTHWEST, INC.
03/25/97 AutoPIPE+4.60 RESULT PAGE 11

D I S P L A C E M E N T S

Point name	Load combination	TRANSLATIONS (in) X	Y	Z	ROTATIONS (deg) X	Y	Z
B75 N	GR	0.000	-0.006	0.000	-0.010	0.000	0.003
	T1	0.086	0.000	-0.166	0.000	0.126	0.000
	R1	0.025	0.002	0.143	0.003	0.085	0.001
	GR+T1	0.086	-0.006	-0.166	-0.010	0.126	0.003
	TOTAL	0.111	0.009	0.309	0.013	0.211	0.004
B75 F	GR	0.000	-0.004	0.000	-0.009	0.000	0.004
	T1	0.104	0.000	-0.174	0.000	0.044	0.000
	R1	0.017	0.002	0.153	0.003	0.033	0.001
	GR+T1	0.104	-0.004	-0.174	-0.009	0.044	0.004
	TOTAL	0.121	0.006	0.327	0.012	0.077	0.005
B80	GR	0.000	0.000	0.000	0.000	0.000	0.004
	T1	0.125	0.000	-0.145	0.000	0.023	0.000
	R1	0.000	0.000	0.154	0.003	0.018	0.001
	GR+T1	0.125	0.000	-0.145	0.000	0.023	0.004
	TOTAL	0.125	0.000	0.298	0.003	0.041	0.005
B85	GR	0.000	-0.010	0.000	0.000	0.000	0.004
	T1	0.144	0.000	-0.073	0.000	0.001	0.000
	R1	0.014	0.003	0.154	0.001	0.002	0.001
	GR+T1	0.144	-0.010	-0.073	0.000	0.001	0.004
	TOTAL	0.158	0.013	0.227	0.001	0.003	0.005
B90	GR	0.000	0.000	0.000	0.011	0.000	0.003
	T1	0.125	0.000	0.017	0.000	-0.017	0.000
	R1	0.000	0.000	0.154	0.002	0.010	0.001
	GR+T1	0.125	0.000	0.017	0.011	-0.017	0.003
	TOTAL	0.125	0.000	0.171	0.013	0.026	0.004
B95	GR	0.000	-0.045	0.000	0.005	0.000	0.003
	T1	0.079	0.000	0.107	0.000	-0.026	0.000
	R1	0.013	0.003	0.154	0.001	0.001	0.001
	GR+T1	0.079	-0.045	0.107	0.005	-0.026	0.003
	TOTAL	0.093	0.048	0.260	0.006	0.027	0.004
B100	GR	0.000	0.000	0.000	-0.032	0.000	0.003
	T1	0.021	0.000	0.196	0.000	-0.029	0.000
	R1	0.000	0.000	0.154	0.003	0.010	0.001
	GR+T1	0.021	0.000	0.196	-0.032	-0.029	0.003
	TOTAL	0.021	0.000	0.350	0.034	0.039	0.004
B105	GR	0.000	0.018	0.000	-0.027	0.000	0.003
	T1	0.003	0.000	0.223	0.000	-0.029	0.000
	R1	0.007	0.002	0.154	0.003	0.011	0.001
	GR+T1	0.003	0.018	0.223	-0.027	-0.029	0.003
	TOTAL	0.010	0.020	0.377	0.030	0.039	0.004

SX103 EXHAUSTOR PIPING FLUOR DANIEL NORTHWEST, INC.
03/25/97 AutoPIPE+4.60 RESULT PAGE 12

D I S P L A C E M E N T S

Point name	Load combination	TRANSLATIONS (in) X	Y	Z	ROTATIONS (deg) X	Y	Z
B110	GR	0.000	0.000	0.000	-0.001	0.000	0.000
	T1	0.000	0.000	-0.010	0.000	0.000	0.000
	R1	0.000	0.000	0.000	0.000	0.000	0.000
	GR+T1	0.000	0.000	-0.010	-0.001	0.000	0.000
	TOTAL	0.000	0.000	0.010	0.001	0.000	0.000
B115	GR	0.000	0.000	0.000	0.000	0.000	0.000
	T1	0.000	0.000	0.000	0.000	0.000	0.000
	R1	0.000	0.000	0.000	0.000	0.000	0.000
	GR+T1	0.000	0.000	0.000	0.000	0.000	0.000
	TOTAL	0.000	0.000	0.000	0.000	0.000	0.000

*** Segment B end ***

SUPPORT FORCES

Point/ Supp. ID	Connect/ Type	Load Combination	LOCAL Dirn	LOCAL Force	LOCAL Deform	GLOBAL Dirn	GLOBAL Force	GLOBAL Deform
A06		GR	down	568	0.000	X		0.000
A06 1	Guide		left		0.000	Y	-568	0.000
Stiff	:RIGID					Z		0.000
		T1	down		0.000	X	73	0.093
			left	73	0.093	Y		0.000
						Z	-110	-0.139
		R1	down	26	0.000	X	94	0.000
			left	94	0.000	Y	26	0.000
						Z		0.011
		GR+T1	down	568	0.000	X	73	0.093
			left	73	0.093	Y	-568	0.000
						Z	-110	-0.139
		TOTAL	down	594	0.000	X	167	0.093
			left	167	0.093	Y	594	0.000
						Z	110	0.150
A30		GR	down	285	0.000	X		0.000
A30 1	Guide		left		0.000	Y	-285	0.000
Stiff	:RIGID					Z		0.000
		T1	down		0.000	X	-34	-0.024
			rght	34	0.024	Y		0.000
						Z	-46	-0.032
		R1	down	21	0.000	X	77	0.000
			left	77	0.000	Y	21	0.000
						Z		0.011
		GR+T1	down	285	0.000	X	-34	-0.024
			rght	34	0.024	Y	-285	0.000
						Z	-46	-0.032
		TOTAL	down	306	0.000	X	111	0.024
			left	111	0.024	Y	306	0.000
						Z	46	0.043
B20		GR	down	433	0.000	X		0.000
B20 1	Guide		left		0.000	Y	-433	0.000
Stiff	:RIGID					Z		0.000
		T1	down		0.000	X	-22	-0.034
			rght	22	0.034	Y		0.000
						Z	-35	-0.054

SUPPORT FORCES

Point/ Supp. ID	Connect/ Type	Load Combination	LOCAL Dirn	LOCAL Force	LOCAL Deform	GLOBAL Dirn	GLOBAL Force	GLOBAL Deform
		R1	down	31	0.000	X	52	0.000
			left	52	0.000	Y	31	0.000
						Z		0.023
		GR+T1	down	433	0.000	X	-22	-0.034
			rght	22	0.034	Y	-433	0.000
						Z	-35	-0.054
		TOTAL	down	464	0.000	X	74	0.034
			left	74	0.034	Y	464	0.000
						Z	35	0.077
B30		GR	down	466	0.000	X		0.000
B30 1	Guide		left		0.000	Y	-466	0.000
Stiff	:RIGID					Z		0.000
		T1	down		0.000	X	-24	-0.047
			rght	24	0.047	Y		0.000
						Z	64	0.125
		R1	down	30	0.000	X	44	0.000
			left	44	0.000	Y	30	0.000
						Z		0.023
		GR+T1	down	466	0.000	X	-24	-0.047
			rght	24	0.047	Y	-466	0.000
						Z	64	0.125
		TOTAL	down	495	0.000	X	68	0.047
			left	68	0.047	Y	495	0.000
						Z	64	0.148
B40		GR	down	481	0.000	X		0.000
B40 1	Guide		left		0.000	Y	-481	0.000
Stiff	:RIGID					Z		0.000
		T1	down		0.000	X	-36	-0.125
			rght	36	0.125	Y		0.000
						Z	96	0.304
		R1	down	26	0.000	X	50	0.000
			left	50	0.000	Y	26	0.000
						Z		0.024
		GR+T1	down	481	0.000	X	-36	-0.125
			rght	36	0.125	Y	-481	0.000
						Z	96	0.304
		TOTAL	down	507	0.000	X	86	0.125

SUPPORT FORCES

Point/ Supp. ID	Connect/ Type	Load Combination	LOCAL Dirn	LOCAL Force	LOCAL Deform	GLOBAL Dirn	GLOBAL Force	GLOBAL Deform
			left	86	0.125	Y	507	0.000
						Z	96	0.328
B50		GR	down	364	0.000	X		0.000
B50 1	Guide		left		0.000	Y	-364	0.000
Stiff	:RIGID					Z		0.000
		T1	down		0.000	X	-193	-0.125
			rght	193	0.125	Y		0.000
						Z	75	0.478
		R1	down	16	0.000	X	168	0.000
			left	168	0.000	Y	16	0.000
						Z		0.024
		GR+T1	down	364	0.000	X	-193	-0.125
			rght	193	0.125	Y	-364	0.000
						Z	75	0.478
		TOTAL	down	380	0.000	X	361	0.125
			left	361	0.125	Y	380	0.000
						Z	75	0.501
B65		GR	down	269	0.000	X		0.000
B65 1	Guide		left		0.000	Y	-269	0.000
Stiff	:RIGID					Z		0.000
		T1	down		0.000	X	27	0.012
			rght	227	0.125	Y		0.000
						Z	227	0.125
		R1	down	18	0.000	X		0.025
			left	387	0.000	Y	18	0.000
						Z	387	0.000
		GR+T1	down	269	0.000	X	27	0.012
			rght	227	0.125	Y	-269	0.000
						Z	227	0.125
		TOTAL	down	288	0.000	X	27	0.037
			left	614	0.125	Y	288	0.000
						Z	614	0.125
B80		GR	down	372	0.000	X		0.000
B80 1	Guide		left		0.000	Y	-372	0.000
Stiff	:RIGID					Z		0.000
		T1	down		0.000	X	186	0.125
			left	186	0.125	Y		0.000

SUPPORT FORCES

Point/ Supp. ID	Connect/ Type	Load Combination	LOCAL Dirn	LOCAL Force	LOCAL Deform	GLOBAL Dirn	GLOBAL Force	GLOBAL Deform
						Z	-54	-0.145
		R1	down	16	0.000	X	124	0.000
			left	124	0.000	Y	16	0.000
						Z		0.154
		GR+T1	down	372	0.000	X	186	0.125
			left	186	0.125	Y	-372	0.000
						Z	-54	-0.145
		TOTAL	down	388	0.000	X	310	0.125
			left	310	0.125	Y	388	0.000
						Z	54	0.298
B90		GR	down	491	0.000	X		0.000
B90 1	Guide		left		0.000	Y	-491	0.000
Stiff	:RIGID					Z		0.000
		T1	down		0.000	X	86	0.125
			left	86	0.125	Y		0.000
						Z	12	0.017
		R1	down	22	0.000	X	49	0.000
			left	49	0.000	Y	22	0.000
						Z		0.154
		GR+T1	down	491	0.000	X	86	0.125
			left	86	0.125	Y	-491	0.000
						Z	12	0.017
		TOTAL	down	513	0.000	X	135	0.125
			left	135	0.125	Y	513	0.000
						Z	12	0.171
B100		GR	down	332	0.000	X		0.000
B100 1	Guide		left		0.000	Y	-332	0.000
Stiff	:RIGID					Z		0.000
		T1	down		0.000	X	6	0.021
			left	6	0.021	Y		0.000
						Z	54	0.196
		R1	down	13	0.000	X	26	0.000
			left	26	0.000	Y	13	0.000
						Z		0.154
		GR+T1	down	332	0.000	X	6	0.021
			left	6	0.021	Y	-332	0.000
						Z	54	0.196

SX103 EXHAUSTOR PIPING FLUOR DANIEL NORTHWEST, INC.
03/25/97 AutoPIPE+4.60 RESULT PAGE 17

SUPPORT FORCES

Point/ Supp. ID	Connect/ Type	Load Combination	LOCAL Dirn	LOCAL Force	LOCAL Deform	GLOBAL Dirn	GLOBAL Force	GLOBAL Deform
		TOTAL	down	345	0.000	X	32	0.021
			left	32	0.021	Y	345	0.000
						Z	54	0.350

SX103 EXHAUSTOR PIPING FLUOR DANIEL NORTHWEST, INC.
03/25/97 AutoPIPE+4.60 RESULT PAGE 18

RESTRAINT REACTIONS

Point name	Load combination	FORCES (lb) X	Y	Z	Result	MOMENTS (ft-lb) X	Y	Z	Result
A00	Anchor								
	GR	0	-293	0	293	103	0	94	139
	T1	17	0	-14	22	0	12	0	12
	R1	13	9	32	36	3	4	22	22
	GR+T1	17	-293	-14	293	103	12	94	139
	TOTAL	30	302	45	307	105	16	115	157
A06	Guide								
	GR	0	-568	0	568	0	0	0	0
	T1	73	0	-110	132	0	0	0	0
	R1	94	26	0	97	0	0	0	0
	GR+T1	73	-568	-110	583	0	0	0	0
	TOTAL	167	594	110	627	0	0	0	0
A30	Guide								
	GR	0	-285	0	285	0	0	0	0
	T1	-34	0	-46	57	0	0	0	0
	R1	77	21	0	80	0	0	0	0
	GR+T1	-34	-285	-46	291	0	0	0	0
	TOTAL	111	306	46	329	0	0	0	0
A50	Anchor								
	GR	0	18	0	18	4	0	-128	128
	T1	-19	0	-288	289	0	-1173	0	1173
	R1	126	13	389	409	7	1163	24	1164
	GR+T1	-19	18	-288	289	4	-1173	-128	1180
	TOTAL	145	31	677	693	11	2337	153	2342
B20	Guide								
	GR	0	-433	0	433	0	0	0	0
	T1	-22	0	-35	42	0	0	0	0
	R1	52	31	0	60	0	0	0	0
	GR+T1	-22	-433	-35	435	0	0	0	0
	TOTAL	74	464	35	471	0	0	0	0
B30	Guide								
	GR	0	-466	0	466	0	0	0	0
	T1	-24	0	64	68	0	0	0	0
	R1	44	30	0	53	0	0	0	0
	GR+T1	-24	-466	64	471	0	0	0	0
	TOTAL	68	495	64	504	0	0	0	0
B40	Guide								
	GR	0	-481	0	481	0	0	0	0
	T1	-36	0	96	103	0	0	0	0
	R1	50	26	0	56	0	0	0	0
	GR+T1	-36	-481	96	492	0	0	0	0
	TOTAL	86	507	96	523	0	0	0	0

RESTRAINT REACTIONS

Point name	Load combination	FORCES (lb) X	Y	Z	Result	MOMENTS (ft-lb) X	Y	Z	Result
B50	Guide								
	GR	0	-364	0	364	0	0	0	0
	T1	-193	0	75	206	0	0	0	0
	R1	168	16	0	169	0	0	0	0
	GR+T1	-193	-364	75	418	0	0	0	0
	TOTAL	361	380	75	529	0	0	0	0
B65	Guide								
	GR	0	-269	0	269	0	0	0	0
	T1	27	0	227	229	0	0	0	0
	R1	0	18	387	387	0	0	0	0
	GR+T1	27	-269	227	353	0	0	0	0
	TOTAL	27	288	614	678	0	0	0	0
B80	Guide								
	GR	0	-372	0	372	0	0	0	0
	T1	186	0	-54	193	0	0	0	0
	R1	124	16	0	125	0	0	0	0
	GR+T1	186	-372	-54	419	0	0	0	0
	TOTAL	310	388	54	500	0	0	0	0
B90	Guide								
	GR	0	-491	0	491	0	0	0	0
	T1	86	0	12	87	0	0	0	0
	R1	49	22	0	54	0	0	0	0
	GR+T1	86	-491	12	498	0	0	0	0
	TOTAL	135	513	12	530	0	0	0	0
B100	Guide								
	GR	0	-332	0	332	0	0	0	0
	T1	6	0	54	55	0	0	0	0
	R1	26	13	0	29	0	0	0	0
	GR+T1	6	-332	54	336	0	0	0	0
	TOTAL	32	345	54	350	0	0	0	0
B115	Anchor								
	GR	0	-85	0	85	-89	0	2	89
	T1	0	0	19	19	0	0	0	0
	R1	5	3	14	15	2	4	1	5
	GR+T1	0	-85	19	87	-89	0	2	89
	TOTAL	5	88	33	94	91	4	2	91

GLOBAL FORCES & MOMENTS

Point name	Load combination	FORCES (lb) X	Y	Z	Result	MOMENTS (ft-lb) X	Y	Z	Result
*** Segment A begin ***									
A00	GR	0	293	0	293	-103	0	-94	139
	T1	-17	0	14	22	0	-12	0	12
	R1	13	9	32	35	3	4	22	22
	GR+T1	-17	293	14	293	-103	-12	-94	139
	TOTAL	30	302	45	307	105	16	115	157
A01 -	GR	0	285	0	285	-30	0	-94	98
	T1	-17	0	14	22	0	-8	0	8
	R1	13	9	31	35	1	1	22	22
	GR+T1	-17	285	14	286	-30	-8	-94	99
	TOTAL	29	294	45	299	31	9	115	120
A01 +	GR	0	68	0	68	-30	0	-94	98
	T1	-17	0	14	22	0	-8	0	8
	R1	5	4	29	30	1	1	22	22
	GR+T1	-17	68	14	72	-30	-8	-94	99
	TOTAL	21	72	43	87	31	9	115	120
A02 -	GR	0	-206	0	206	-31	0	-94	98
	T1	-17	0	14	22	0	9	0	9
	R1	4	4	29	30	1	1	22	22
	GR+T1	-17	-206	14	207	-31	9	-94	99
	TOTAL	21	210	43	215	32	10	115	120
A02 +	GR	0	-286	0	286	-31	0	-94	98
	T1	-17	0	14	22	0	9	0	9
	R1	15	10	30	35	1	1	22	22
	GR+T1	-17	-286	14	287	-31	9	-94	99
	TOTAL	32	296	44	301	32	10	115	120
A06 -	GR	0	-304	0	304	-215	0	-94	234
	T1	-17	0	14	22	0	19	0	19
	R1	16	11	31	36	7	10	22	25
	GR+T1	-17	-304	14	305	-215	19	-94	235
	TOTAL	33	315	44	320	222	29	115	252
A06 +	GR	0	264	0	264	-215	0	-94	234
	T1	-90	0	124	153	0	19	0	19
	R1	89	20	31	97	7	10	22	25
	GR+T1	-90	264	124	305	-215	19	-94	235
	TOTAL	179	285	154	370	222	29	115	252

G L O B A L F O R C E S & M O M E N T S

Point name	Load combination	FORCES (lb) X	Y	Z	Result	MOMENTS (ft-lb) X	Y	Z	Result
A10 -	GR	0	246	0	246	-57	0	-94	109
	T1	-90	0	124	153	0	75	0	75
	R1	89	20	31	97	13	55	22	60
	GR+T1	-90	246	124	290	-57	75	-94	132
	TOTAL	179	266	155	356	70	129	115	187
A10 +	GR	0	120	0	120	-14	0	122	123
	T1	-53	0	-334	338	0	-647	0	647
	R1	63	7	360	365	34	601	26	603
	GR+T1	-53	120	-334	359	-14	-647	122	659
	TOTAL	116	127	694	715	48	1248	148	1258
A15	GR	0	71	0	71	146	0	122	191
	T1	-53	0	-334	338	0	-559	0	559
	R1	64	5	363	369	31	495	26	497
	GR+T1	-53	71	-334	346	146	-559	122	590
	TOTAL	117	77	697	711	178	1054	148	1079
A20	GR	0	53	0	53	188	0	122	224
	T1	-53	0	-334	338	0	-523	0	523
	R1	66	5	366	372	30	452	26	454
	GR+T1	-53	53	-334	342	188	-523	122	569
	TOTAL	118	57	700	712	218	976	148	1011
A25	GR	0	-47	0	47	201	0	122	235
	T1	-53	0	-334	338	0	-286	0	286
	R1	72	7	375	382	17	148	26	151
	GR+T1	-53	-47	-334	341	201	-286	122	370
	TOTAL	125	53	709	722	218	434	148	-508
A30 -	GR	0	-144	0	144	-221	0	122	253
	T1	-53	0	-334	338	0	-53	0	53
	R1	74	9	381	388	18	175	26	178
	GR+T1	-53	-144	-334	368	-221	-53	122	258
	TOTAL	126	153	715	742	239	228	148	362
A30 +	GR	0	141	0	141	-221	0	122	253
	T1	-19	0	-288	289	0	-53	0	53
	R1	126	13	382	403	18	175	26	178
	GR+T1	-19	141	-288	321	-221	-53	122	258
	TOTAL	144	153	670	703	239	228	148	362
A35 N	GR	0	116	0	116	-76	0	122	144
	T1	-19	0	-288	289	0	-32	0	32
	R1	126	12	385	405	6	301	26	302
	GR+T1	-19	116	-288	311	-76	-32	122	148
	TOTAL	144	128	673	700	82	333	148	374

G L O B A L F O R C E S & M O M E N T S

Point name	Load combination	FORCES (lb) X	Y	Z	Result	MOMENTS (ft-lb) X	Y	Z	Result
A35 F	GR	0	90	0	90	4	0	48	48
	T1	-19	0	-288	289	0	-234	0	234
	R1	126	12	387	407	7	101	17	103
	GR+T1	-19	90	-288	302	4	-234	48	239
	TOTAL	144	102	675	698	11	336	65	342
A45	GR	0	62	0	62	4	0	-48	48
	T1	-19	0	-288	289	0	-597	0	597
	R1	126	12	388	408	7	387	6	387
	GR+T1	-19	62	-288	295	4	-597	-48	599
	TOTAL	144	74	676	695	11	984	54	985
A50	GR	0	18	0	18	4	0	-128	128
	T1	-19	0	-288	289	0	-1173	0	1173
	R1	126	13	389	409	7	1163	24	1164
	GR+T1	-19	18	-288	289	4	-1173	-128	1180
	TOTAL	145	31	677	693	11	2337	153	2342
*** Segment A end ***									
*** Segment B begin ***									
A10	GR	0	126	0	126	-43	0	-216	220
	T1	-37	0	458	459	0	722	0	722
	R1	32	21	353	355	23	653	48	655
	GR+T1	-37	126	458	476	-43	722	-216	755
	TOTAL	69	146	811	827	66	1375	264	1401
B05	GR	0	82	0	82	95	0	-60	113
	T1	-37	0	458	459	0	85	0	85
	R1	31	18	349	350	8	157	18	158
	GR+T1	-37	82	458	466	95	85	-60	141
	TOTAL	68	99	806	815	103	242	78	274
B10 N	GR	0	45	0	45	165	0	19	166
	T1	-37	0	458	459	0	-444	0	444
	R1	31	12	344	345	22	248	2	249
	GR+T1	-37	45	458	461	165	-444	19	474
	TOTAL	69	58	801	806	187	692	21	717
B10 F	GR	0	31	0	31	186	0	29	188
	T1	-37	0	458	459	0	-540	0	540
	R1	33	7	339	340	28	320	5	321
	GR+T1	-37	31	458	460	186	-540	29	572
	TOTAL	70	38	796	800	214	860	34	887

SX103 EXHAUSTOR PIPING
03/25/97

FLUOR DANIEL NORTHWEST, INC.
AutoPIPE+4.60 RESULT PAGE 23

G L O B A L F O R C E S & M O M E N T S

Point name	Load combination	FORCES (lb) X	Y	Z	Result	MOMENTS (ft-lb) X	Y	Z	Result
B15 -	GR	0	-83	0	83	53	0	29	60
	T1	-37	0	458	459	0	-348	0	348
	R1	41	13	320	323	26	156	5	158
	GR+T1	-37	-83	458	466	53	-348	29	353
	TOTAL	79	96	777	787	79	504	34	511
B20 -	GR	0	-204	0	204	-735	0	29	736
	T1	-37	0	458	459	0	-143	0	143
	R1	46	18	307	311	68	114	5	133
	GR+T1	-37	-204	458	502	-735	-143	29	750
	TOTAL	83	222	764	800	803	257	34	844
B20 +	GR	0	229	0	229	-735	0	29	736
	T1	-15	0	493	493	0	-143	0	143
	R1	23	14	297	299	68	114	5	133
	GR+T1	-15	229	493	544	-735	-143	29	750
	TOTAL	38	243	790	828	803	257	34	844
B25 -	GR	0	9	0	9	456	0	29	457
	T1	-15	0	493	493	0	6	0	6
	R1	11	8	274	274	45	131	5	139
	GR+T1	-15	9	493	493	456	6	29	457
	TOTAL	26	16	767	767	501	138	34	521
B25 +	GR	0	-15	0	15	456	0	29	457
	T1	-15	0	493	493	0	6	0	6
	R1	14	7	259	259	45	131	5	139
	GR+T1	-15	-15	493	493	456	6	29	457
	TOTAL	29	22	751	752	501	138	34	521
B30 -	GR	0	-236	0	236	-798	0	29	798
	T1	-15	0	493	493	0	155	0	155
	R1	26	14	236	238	62	103	5	120
	GR+T1	-15	-236	493	546	-798	155	29	813
	TOTAL	41	250	729	772	860	258	34	899
B30 +	GR	0	230	0	230	-798	0	29	798
	T1	9	0	429	429	0	155	0	155
	R1	27	16	226	228	62	103	5	120
	GR+T1	9	230	429	487	-798	155	29	813
	TOTAL	36	246	654	700	860	258	34	899
B35 -	GR	0	10	0	10	402	0	29	403
	T1	9	0	429	429	0	65	0	65
	R1	14	7	205	206	55	134	5	145
	GR+T1	9	10	429	429	402	65	29	408
	TOTAL	23	17	634	634	456	199	34	499

SX103 EXHAUSTOR PIPING
03/25/97

FLUOR DANIEL NORTHWEST, INC.
AutoPIPE+4.60 RESULT PAGE 24

G L O B A L F O R C E S & M O M E N T S

Point name	Load combination	FORCES (lb) X	Y	Z	Result	MOMENTS (ft-lb) X	Y	Z	Result
B35 +	GR	0	-14	0	14	402	0	29	403
	T1	9	0	429	429	0	65	0	65
	R1	12	6	192	193	55	134	5	145
	GR+T1	9	-14	429	429	402	65	29	408
	TOTAL	21	20	621	622	456	199	34	499
B40 -	GR	0	-235	0	235	-845	0	29	845
	T1	9	0	429	429	0	-26	0	26
	R1	25	15	175	177	54	133	5	143
	GR+T1	9	-235	429	489	-845	-26	29	846
	TOTAL	34	250	604	654	899	158	34	913
B40 +	GR	0	246	0	246	-845	0	29	845
	T1	30	0	332	334	0	-26	0	26
	R1	38	12	167	172	54	133	5	143
	GR+T1	30	246	332	414	-845	-26	29	846
	TOTAL	69	258	500	566	899	158	34	913
B45 -	GR	0	25	0	25	511	0	29	511
	T1	30	0	332	334	0	-329	0	329
	R1	29	7	154	157	43	212	5	216
	GR+T1	30	25	332	335	511	-329	29	608
	TOTAL	59	32	487	491	554	541	34	775
B45 +	GR	0	1	0	1	511	0	29	511
	T1	30	0	332	334	0	-329	0	329
	R1	30	6	148	151	43	212	5	216
	GR+T1	30	1	332	334	511	-329	29	608
	TOTAL	60	7	481	484	554	541	34	775
B50 -	GR	0	-206	0	206	-448	0	29	449
	T1	30	0	332	334	0	-614	0	614
	R1	34	8	143	147	33	411	5	412
	GR+T1	30	-206	332	392	-448	-614	29	760
	TOTAL	64	214	475	525	480	1024	34	1132
B50 +	GR	0	158	0	158	-448	0	29	449
	T1	223	0	258	341	0	-614	0	614
	R1	140	12	142	200	33	411	5	412
	GR+T1	223	158	258	376	-448	-614	29	760
	TOTAL	363	170	400	566	480	1024	34	1132
B55 N	GR	0	87	0	87	-49	0	29	57
	T1	223	0	258	341	0	-1338	0	1338
	R1	138	7	142	198	10	82	5	83
	GR+T1	223	87	258	352	-49	-1338	29	1339
	TOTAL	361	94	400	547	59	1420	34	1422

SX103 EXHAUSTOR PIPING
03/25/97

FLUOR DANIEL NORTHWEST, INC.
AutoPIPE+4.60 RESULT PAGE 25

G L O B A L F O R C E S & M O M E N T S

Point name	Load combination	FORCES (lb) X	Y	Z	Result	MOMENTS (ft-lb) X	Y	Z	Result
B55 F	GR	0	61	0	61	9	0	-24	25
	T1	223	0	258	341	0	-1312	0	1312
	R1	135	3	143	197	11	257	7	257
	GR+T1	223	61	258	346	9	-1312	-24	1312
	TOTAL	358	64	400	541	19	1568	30	1569
B60	GR	0	-22	0	22	9	0	-96	97
	T1	223	0	258	341	0	-345	0	345
	R1	131	6	142	193	11	771	12	771
	GR+T1	223	-22	258	341	9	-345	-96	359
	TOTAL	354	28	400	534	19	1117	108	1122
B65 -	GR	0	-121	0	121	9	0	226	226
	T1	223	0	258	341	0	814	0	814
	R1	128	8	141	191	11	1401	37	1401
	GR+T1	223	-121	258	362	9	814	226	845
	TOTAL	351	129	399	547	19	2215	263	2231
B65 +	GR	0	148	0	148	9	0	226	226
	T1	196	0	31	199	0	814	0	814
	R1	127	10	247	278	11	1401	37	1401
	GR+T1	196	148	31	248	9	814	226	845
	TOTAL	323	158	278	454	19	2215	263	2231
B70 -	GR	0	49	0	49	9	0	-218	218
	T1	196	0	31	199	0	952	0	952
	R1	126	8	244	275	11	312	12	312
	GR+T1	196	49	31	205	9	952	-218	977
	TOTAL	322	57	275	427	19	1264	230	1285
B70 +	GR	0	1	0	1	9	0	-218	218
	T1	196	0	31	199	0	952	0	952
	R1	125	3	236	267	11	312	12	312
	GR+T1	196	1	31	199	9	952	-218	977
	TOTAL	322	4	266	418	19	1264	230	1285
B75 N	GR	0	-82	0	82	9	0	-67	67
	T1	196	0	31	199	0	1066	0	1066
	R1	126	6	224	257	11	587	5	587
	GR+T1	196	-82	31	215	9	1066	-67	1069
	TOTAL	323	87	254	420	19	1653	71	1655
B75 F	GR	0	-108	0	108	-65	0	2	65
	T1	196	0	31	199	0	942	0	942
	R1	127	9	216	251	9	662	1	662
	GR+T1	196	-108	31	226	-65	942	2	944
	TOTAL	323	117	247	423	74	1604	2	1605

SX103 EXHAUSTOR PIPING
03/25/97

FLUOR DANIEL NORTHWEST, INC.
AutoPIPE+4.60 RESULT PAGE 26

G L O B A L F O R C E S & M O M E N T S

Point name	Load combination	FORCES (lb) X	Y	Z	Result	MOMENTS (ft-lb) X	Y	Z	Result
B80 -	GR	0	-179	0	179	-532	0	2	532
	T1	196	0	31	199	0	305	0	305
	R1	128	11	206	242	31	319	1	321
	GR+T1	196	-179	31	268	-532	305	2	613
	TOTAL	324	191	236	444	563	624	2	840
B80 +	GR	0	192	0	192	-532	0	2	532
	T1	10	0	85	85	0	305	0	305
	R1	36	9	196	200	31	319	1	321
	GR+T1	10	192	85	210	-532	305	2	613
	TOTAL	46	201	281	349	563	624	2	840
B85 -	GR	0	16	0	16	301	0	2	301
	T1	10	0	85	85	0	221	0	221
	R1	28	6	170	173	49	196	1	202
	GR+T1	10	16	85	87	301	221	2	373
	TOTAL	38	21	255	258	350	417	2	545
B85 +	GR	0	-8	0	8	301	0	2	301
	T1	10	0	85	85	0	221	0	221
	R1	23	6	150	152	49	196	1	202
	GR+T1	10	-8	85	86	301	221	2	373
	TOTAL	33	14	235	237	350	417	2	545
B90 -	GR	0	-229	0	229	-883	0	2	883
	T1	10	0	85	85	0	117	0	117
	R1	36	12	117	123	46	117	1	126
	GR+T1	10	-229	85	244	-883	117	2	891
	TOTAL	46	241	202	318	929	234	2	958
B90 +	GR	0	262	0	262	-883	0	2	883
	T1	6	0	73	73	0	117	0	117
	R1	30	11	101	106	46	117	1	126
	GR+T1	6	262	73	272	-883	117	2	891
	TOTAL	35	273	174	326	929	234	2	958
B95 -	GR	0	41	0	41	634	0	2	634
	T1	6	0	73	73	0	58	0	58
	R1	16	7	68	70	45	159	1	165
	GR+T1	6	41	73	84	634	58	2	636
	TOTAL	22	48	141	151	678	218	2	713
B95 +	GR	0	17	0	17	634	0	2	634
	T1	6	0	73	73	0	58	0	58
	R1	9	5	46	48	45	159	1	165
	GR+T1	6	17	73	75	634	58	2	636
	TOTAL	15	22	119	122	678	218	2	713

GLOBAL FORCES & MOMENTS

Point name	Load combination	FORCES (lb) X	Y	Z	Result	MOMENTS (ft-lb) X	Y	Z	Result
B100 -	GR	0	-203	0	203	-295	0	2	295
	T1	6	0	73	73	0	0	0	0
	R1	24	9	14	29	11	21	1	23
	GR+T1	6	-203	73	216	-295	0	2	295
	TOTAL	30	212	86	231	306	21	2	306
B100 +	GR	0	128	0	128	-295	0	2	295
	T1	0	0	19	19	0	0	0	0
	R1	9	5	3	11	11	21	1	23
	GR+T1	0	128	19	130	-295	0	2	295
	TOTAL	9	134	22	136	306	21	2	306
B105	GR	0	21	0	21	-8	0	2	9
	T1	0	0	19	19	0	0	0	0
	R1	2	1	11	11	0	0	1	1
	GR+T1	0	21	19	28	-8	0	2	9
	TOTAL	2	23	29	37	9	0	2	9
B110	GR	0	-61	0	61	-8	0	2	8
	T1	0	0	19	19	0	0	0	0
	R1	3	1	14	14	0	1	1	1
	GR+T1	0	-61	19	63	-8	0	2	8
	TOTAL	3	62	32	70	8	1	2	8
B115	GR	0	-85	0	85	-89	0	2	89
	T1	0	0	19	19	0	0	0	0
	R1	4	2	14	15	2	4	1	5
	GR+T1	0	-85	19	87	-89	0	2	89
	TOTAL	4	88	33	94	91	4	2	91

*** Segment B end ***

ASME B31.3c (1992) CODE COMPLIANCE

Point name	Load combination	(Moments in ft-lb) In-Pl. Moment	Out-Pl. Moment	Torsion Moment	S.I.F In	S.I.F Out	Eq. no.	(Stress in psi) Load type	Code Stress	Code Allow.
*** Segment A begin ***										
A00	Max P						(3a)	HOOP	2010	16700
	GR + Max P	103	0		1.00	1.00	(18)	SUST	941	16700
	Cold to T1	0	12	0	1.00	1.00	(17)	DISP	7	25050
	Sus. + R1	105	4		1.00	1.00	(18)	OCC	944	22211
A01	Max P						(3a)	HOOP	2010	16700
	GR + Max P	30	0		1.00	1.00	(18)	SUST	902	16700
	Cold to T1	0	8	0	1.00	1.00	(17)	DISP	4	25050
	Sus. + R1	31	1		1.00	1.00	(18)	OCC	903	22211
A02	Max P						(3a)	HOOP	2010	16700
	GR + Max P	31	0		1.00	1.00	(18)	SUST	902	16700
	Cold to T1	0	9	0	1.00	1.00	(17)	DISP	5	25050
	Sus. + R1	32	1		1.00	1.00	(18)	OCC	903	22211
A06	Max P						(3a)	HOOP	2010	16700
	GR + Max P	215	0		1.00	1.00	(18)	SUST	1002	16700
	Cold to T1	0	19	0	1.00	1.00	(17)	DISP	10	25050
	Sus. + R1	222	10		1.00	1.00	(18)	OCC	1009	22211
A10 -	Max P						(3a)	HOOP	2010	16700
	GR + Max P	0	57		2.94	3.58	(18)	SUST	996	16700
	Cold to T1	75	0	0	2.94	3.58	(17)	DISP	119	25050
	Sus. + R1	55	70		2.94	3.58	(18)	OCC	1087	22211
A10 +	Max P						(3a)	HOOP	2010	16700
	GR + Max P	0	14		2.94	3.58	(18)	SUST	913	16700
	Cold to T1	647	0	0	2.94	3.58	(17)	DISP	1035	25050
	Sus. + R1	601	48		2.94	3.58	(18)	OCC	1877	22211
A15	Max P						(3a)	HOOP	2010	16700
	GR + Max P	146	0		1.00	1.00	(18)	SUST	965	16700
	Cold to T1	0	559	0	1.00	1.00	(17)	DISP	304	25050
	Sus. + R1	178	495		1.00	1.00	(18)	OCC	1236	22211
A20	Max P						(3a)	HOOP	656	16700
	GR + Max P	188	0		1.00	1.00	(18)	SUST	561	16700
	Cold to T1	0	523	0	1.00	1.00	(17)	DISP	739	25050
	Sus. + R1	218	452		1.00	1.00	(18)	OCC	1201	22211
A25	Max P						(3a)	HOOP	656	16700
	GR + Max P	201	0		1.00	1.00	(18)	SUST	579	16700
	Cold to T1	0	286	0	1.00	1.00	(17)	DISP	404	25050
	Sus. + R1	218	148		1.00	1.00	(18)	OCC	790	22211

SX103 EXHAUSTOR PIPING — FLUOR DANIEL NORTHWEST, INC.
03/25/97 — AutoPIPE+4.60 RESULT PAGE 29

ASME B31.3c (1992) CODE COMPLIANCE

Point name	Load combination	(Moments in ft-lb) In-Pl. Moment	Out-Pl. Moment	Torsion Moment	S.I.F In	S.I.F Out	(Stress in psi) Eq. no.	Load type	Code Stress	Code Allow.
A30	Max P						(3a)	HOOP	656	16700
	GR + Max P	221	0		1.00	1.00	(18)	SUST	608	16700
	Cold to T1	0	53	0	1.00	1.00	(17)	DISP	75	25050
	Sus. + R1	239	175		1.00	1.00	(18)	OCC	857	22211
A35 N-	Max P						(3a)	HOOP	656	16700
	GR + Max P	76	0		1.00	1.00	(18)	SUST	403	16700
	Cold to T1	0	32	0	1.00	1.00	(17)	DISP	45	25050
	Sus. + R1	82	301		1.00	1.00	(18)	OCC	828	22211
A35 N+	Max P						(3a)	HOOP	656	16700
	GR + Max P	0	76		2.27	1.89	(18)	SUST	498	16700
	Cold to T1	32	0	0	2.27	1.89	(17)	DISP	103	25050
	Sus. + R1	301	82		2.27	1.89	(18)	OCC	1461	22211
A35 F-	Max P						(3a)	HOOP	656	16700
	GR + Max P	0	48		2.27	1.89	(18)	SUST	423	16700
	Cold to T1	234	0	0	2.27	1.89	(17)	DISP	750	25050
	Sus. + R1	101	65		2.27	1.89	(18)	OCC	752	22211
A35 F+	Max P						(3a)	HOOP	656	16700
	GR + Max P	48	0		1.00	1.00	(18)	SUST	363	16700
	Cold to T1	0	234	0	1.00	1.00	(17)	DISP	331	25050
	Sus. + R1	65	101		1.00	1.00	(18)	OCC	509	22211
A45	Max P						(3a)	HOOP	656	16700
	GR + Max P	48	0		1.00	1.00	(18)	SUST	364	16700
	Cold to T1	0	597	0	1.00	1.00	(17)	DISP	844	25050
	Sus. + R1	54	387		1.00	1.00	(18)	OCC	910	22211
A50	Max P						(3a)	HOOP	656	16700
	GR + Max P	128	0		1.00	1.00	(18)	SUST	477	16700
	Cold to T1	0	1173	0	1.00	1.00	(17)	DISP	1657	25050
	Sus. + R1	153	1163		1.00	1.00	(18)	OCC	2121	22211
*** Segment A end ***										
*** Segment B begin ***										
A10	Max P						(3a)	HOOP	656	16700
	GR + Max P	0	190		2.94	3.58	(18)	SUST	1731	16700
	Cold to T1	722	0	0	2.94	3.58	(17)	DISP	4467	25050
	Sus. + R1	653	241		2.94	3.58	(18)	OCC	5791	22211
B05	Max P						(3a)	HOOP	656	16700
	GR + Max P	18	0		1.00	1.00	(18)	SUST	321	16700
	Cold to T1	0	85	0	1.00	1.00	(17)	DISP	120	25050
	Sus. + R1	30	157		1.00	1.00	(18)	OCC	543	22211

SX103 EXHAUSTOR PIPING — FLUOR DANIEL NORTHWEST, INC.
03/25/97 — AutoPIPE+4.60 RESULT PAGE 30

ASME B31.3c (1992) CODE COMPLIANCE

Point name	Load combination	(Moments in ft-lb) In-Pl. Moment	Out-Pl. Moment	Torsion Moment	S.I.F In	S.I.F Out	(Stress in psi) Eq. no.	Load type	Code Stress	Code Allow.
B10 N-	Max P						(3a)	HOOP	656	16700
	GR + Max P	123	0		1.00	1.00	(18)	SUST	469	16700
	Cold to T1	0	444	0	1.00	1.00	(17)	DISP	628	25050
	Sus. + R1	139	248		1.00	1.00	(18)	OCC	820	22211
B10 N+	Max P						(3a)	HOOP	656	16700
	GR + Max P	0	123		2.27	1.89	(18)	SUST	624	16700
	Cold to T1	444	0	0	2.27	1.89	(17)	DISP	1422	25050
	Sus. + R1	248	139		2.27	1.89	(18)	OCC	1418	22211
B10 F-	Max P						(3a)	HOOP	656	16700
	GR + Max P	0	186		2.27	1.89	(18)	SUST	792	16700
	Cold to T1	540	0	0	2.27	1.89	(17)	DISP	1727	25050
	Sus. + R1	320	214		2.27	1.89	(18)	OCC	1818	22211
B10 F+	Max P						(3a)	HOOP	656	16700
	GR + Max P	186	0		1.00	1.00	(18)	SUST	558	16700
	Cold to T1	0	540	0	1.00	1.00	(17)	DISP	762	25050
	Sus. + R1	214	320		1.00	1.00	(18)	OCC	1012	22211
B15	Max P						(3a)	HOOP	656	16700
	GR + Max P	53	0		1.00	1.00	(18)	SUST	371	16700
	Cold to T1	0	348	0	1.00	1.00	(17)	DISP	491	25050
	Sus. + R1	79	156		1.00	1.00	(18)	OCC	594	22211
B20	Max P						(3a)	HOOP	656	16700
	GR + Max P	735	0		1.00	1.00	(18)	SUST	1334	16700
	Cold to T1	0	143	0	1.00	1.00	(17)	DISP	202	25050
	Sus. + R1	803	114		1.00	1.00	(18)	OCC	1522	22211
B25	Max P						(3a)	HOOP	656	16700
	GR + Max P	456	0		1.00	1.00	(18)	SUST	940	16700
	Cold to T1	0	6	0	1.00	1.00	(17)	DISP	9	25050
	Sus. + R1	501	131		1.00	1.00	(18)	OCC	1136	22211
B30	Max P						(3a)	HOOP	656	16700
	GR + Max P	798	0		1.00	1.00	(18)	SUST	1422	16700
	Cold to T1	0	155	0	1.00	1.00	(17)	DISP	219	25050
	Sus. + R1	860	103		1.00	1.00	(18)	OCC	1592	22211
B35	Max P						(3a)	HOOP	656	16700
	GR + Max P	402	0		1.00	1.00	(18)	SUST	863	16700
	Cold to T1	0	65	0	1.00	1.00	(17)	DISP	91	25050
	Sus. + R1	456	134		1.00	1.00	(18)	OCC	1068	22211
B40	Max P						(3a)	HOOP	656	16700
	GR + Max P	845	0		1.00	1.00	(18)	SUST	1489	16700
	Cold to T1	0	26	0	1.00	1.00	(17)	DISP	37	25050
	Sus. + R1	899	133		1.00	1.00	(18)	OCC	1691	22211

SX103 EXHAUSTOR PIPING — FLUOR DANIEL NORTHWEST, INC.
03/25/97 — AutoPIPE+4.60 RESULT PAGE 31

ASME B31.3c (1992) CODE COMPLIANCE

Point name	Load combination	(Moments in ft-lb) In-Pl. Moment	Out-Pl. Moment	Torsion Moment	S.I.F In	S.I.F Out	Eq. no.	Load type	(Stress in psi) Code Stress	Code Allow.
B45	Max P						(3a)	HOOP	656	16700
	GR + Max P	511	0		1.00	1.00	(18)	SUST	1017	16700
	Cold to T1	0	329	0	1.00	1.00	(17)	DISP	465	25050
	Sus. + R1	554	212		1.00	1.00	(18)	OCC	1322	22211
B50	Max P						(3a)	HOOP	656	16700
	GR + Max P	448	0		1.00	1.00	(18)	SUST	928	16700
	Cold to T1	0	614	0	1.00	1.00	(17)	DISP	867	25050
	Sus. + R1	480	411		1.00	1.00	(18)	OCC	1510	22211
B55 N-	Max P						(3a)	HOOP	656	16700
	GR + Max P	49	0		1.00	1.00	(18)	SUST	366	16700
	Cold to T1	0	1338	0	1.00	1.00	(17)	DISP	1890	25050
	Sus. + R1	59	82		1.00	1.00	(18)	OCC	482	22211
B55 N+	Max P						(3a)	HOOP	656	16700
	GR + Max P	0	49		2.27	1.89	(18)	SUST	428	16700
	Cold to T1	1338	0	0	2.27	1.89	(17)	DISP	4281	25050
	Sus. + R1	82	59		2.27	1.89	(18)	OCC	692	22211
B55 F-	Max P						(3a)	HOOP	656	16700
	GR + Max P	0	24		2.27	1.89	(18)	SUST	359	16700
	Cold to T1	1312	0	0	2.27	1.89	(17)	DISP	4197	25050
	Sus. + R1	257	30		2.27	1.89	(18)	OCC	1180	22211
B55 F+	Max P						(3a)	HOOP	656	16700
	GR + Max P	24	0		1.00	1.00	(18)	SUST	329	16700
	Cold to T1	0	1312	0	1.00	1.00	(17)	DISP	1853	25050
	Sus. + R1	30	257		1.00	1.00	(18)	OCC	692	22211
B60	Max P						(3a)	HOOP	656	16700
	GR + Max P	96	0		1.00	1.00	(18)	SUST	432	16700
	Cold to T1	0	345	0	1.00	1.00	(17)	DISP	488	25050
	Sus. + R1	108	771		1.00	1.00	(18)	OCC	1521	22211
B65	Max P						(3a)	HOOP	656	16700
	GR + Max P	226	0		1.00	1.00	(18)	SUST	615	16700
	Cold to T1	0	814	0	1.00	1.00	(17)	DISP	1150	25050
	Sus. + R1	263	1401		1.00	1.00	(18)	OCC	2594	22211
B70	Max P						(3a)	HOOP	656	16700
	GR + Max P	218	0		1.00	1.00	(18)	SUST	604	16700
	Cold to T1	0	952	0	1.00	1.00	(17)	DISP	1345	25050
	Sus. + R1	230	312		1.00	1.00	(18)	OCC	1045	22211
B75 N-	Max P						(3a)	HOOP	656	16700
	GR + Max P	67	0		1.00	1.00	(18)	SUST	390	16700
	Cold to T1	0	1066	0	1.00	1.00	(17)	DISP	1506	25050
	Sus. + R1	71	587		1.00	1.00	(18)	OCC	1219	22211

SX103 EXHAUSTOR PIPING — FLUOR DANIEL NORTHWEST, INC.
03/25/97 — AutoPIPE+4.60 RESULT PAGE 32

ASME B31.3c (1992) CODE COMPLIANCE

Point name	Load combination	(Moments in ft-lb) In-Pl. Moment	Out-Pl. Moment	Torsion Moment	S.I.F In	S.I.F Out	Eq. no.	Load type	(Stress in psi) Code Stress	Code Allow.
B75 N+	Max P						(3a)	HOOP	656	16700
	GR + Max P	0	67		2.27	1.89	(18)	SUST	473	16700
	Cold to T1	1066	0	0	2.27	1.89	(17)	DISP	3413	25050
	Sus. + R1	587	71		2.27	1.89	(18)	OCC	2351	22211
B75 F-	Max P						(3a)	HOOP	656	16700
	GR + Max P	0	65		2.27	1.89	(18)	SUST	469	16700
	Cold to T1	942	0	0	2.27	1.89	(17)	DISP	3015	25050
	Sus. + R1	662	74		2.27	1.89	(18)	OCC	2587	22211
B75 F+	Max P						(3a)	HOOP	656	16700
	GR + Max P	65	0		1.00	1.00	(18)	SUST	388	16700
	Cold to T1	0	942	0	1.00	1.00	(17)	DISP	1331	25050
	Sus. + R1	74	662		1.00	1.00	(18)	OCC	1322	22211
B80	Max P						(3a)	HOOP	656	16700
	GR + Max P	532	0		1.00	1.00	(18)	SUST	1047	16700
	Cold to T1	0	305	0	1.00	1.00	(17)	DISP	430	25050
	Sus. + R1	563	319		1.00	1.00	(18)	OCC	1500	22211
B85	Max P						(3a)	HOOP	656	16700
	GR + Max P	301	0		1.00	1.00	(18)	SUST	721	16700
	Cold to T1	0	221	0	1.00	1.00	(17)	DISP	312	25050
	Sus. + R1	350	196		1.00	1.00	(18)	OCC	1006	22211
B90	Max P						(3a)	HOOP	656	16700
	GR + Max P	883	0		1.00	1.00	(18)	SUST	1543	16700
	Cold to T1	0	117	0	1.00	1.00	(17)	DISP	165	25050
	Sus. + R1	929	117		1.00	1.00	(18)	OCC	1720	22211
B95	Max P						(3a)	HOOP	656	16700
	GR + Max P	634	0		1.00	1.00	(18)	SUST	1191	16700
	Cold to T1	0	58	0	1.00	1.00	(17)	DISP	83	25050
	Sus. + R1	678	159		1.00	1.00	(18)	OCC	1425	22211
B100	Max P						(3a)	HOOP	656	16700
	GR + Max P	295	0		1.00	1.00	(18)	SUST	712	16700
	Cold to T1	0	0	0	1.00	1.00	(17)	DISP	0	25050
	Sus. + R1	306	21		1.00	1.00	(18)	OCC	745	22211
B105	Max P						(3a)	HOOP	656	16700
	GR + Max P	8	0		1.00	1.00	(18)	SUST	308	16700
	Cold to T1	0	0	0	1.00	1.00	(17)	DISP	0	25050
	Sus. + R1	9	0		1.00	1.00	(18)	OCC	308	22211
B110	Max P						(3a)	HOOP	656	16700
	GR + Max P	8	0		1.00	1.00	(18)	SUST	307	16700
	Cold to T1	0	0	0	1.00	1.00	(17)	DISP	0	25050
	Sus. + R1	8	1		1.00	1.00	(18)	OCC	308	22211

ASME B31.3c (1992) CODE COMPLIANCE

Point name	Load combination	In-Pl. Moment	Out-Pl. Moment	Torsion Moment	S.I.F In	S.I.F Out	Eq. no.	Load type	Code Stress	Code Allow.
		(Moments in ft-lb)						(Stress in psi)		
B115	Max P						(3a)	HOOP	656	16700
	GR + Max P	89	0		1.00	1.00	(18)	SUST	421	16700
	Cold to T1	0	0	0	1.00	1.00	(17)	DISP	0	25050
	Sus. + R1	91	4		1.00	1.00	(18)	OCC	428	22211

*** Segment B end ***

S Y S T E M S U M M A R Y

Maximum displacements (in)

Maximum X :	0.177	Point : B45	Load Comb.: TOTAL
Maximum Y :	0.048	Point : B95	Load Comb.: TOTAL
Maximum Z :	0.531	Point : B55 N	Load Comb.: TOTAL
Max. total:	0.541	Point : B55 N	Load Comb.: TOTAL

Maximum rotations (deg)

Maximum X :	0.034	Point : B100	Load Comb.: TOTAL
Maximum Y :	0.259	Point : B65	Load Comb.: TOTAL
Maximum Z :	0.029	Point : B10 N	Load Comb.: TOTAL
Max. total:	0.259	Point : B65	Load Comb.: TOTAL

Maximum restraint forces(lb)

Maximum X :	361	Point : B50	Load Comb.: TOTAL
Maximum Y :	594	Point : A06	Load Comb.: TOTAL
Maximum Z :	677	Point : A50	Load Comb.: TOTAL
Max. total:	693	Point : A50	Load Comb.: TOTAL

Maximum restraint moments(ft-lb)

Maximum X :	105	Point : A00	Load Comb.: TOTAL
Maximum Y :	2337	Point : A50	Load Comb.: TOTAL
Maximum Z :	153	Point : A50	Load Comb.: TOTAL
Max. total:	2342	Point : A50	Load Comb.: TOTAL

SYSTEM SUMMARY

Maximum pipe forces (lb)

Maximum X :	363	Point : B50	Load Comb.: TOTAL
Maximum Y :	315	Point : A06	Load Comb.: TOTAL
Maximum Z :	811	Point : A10	Load Comb.: TOTAL
Max. total:	828	Point : B20	Load Comb.: TOTAL

Maximum pipe moments (ft-lb)

Maximum X :	929	Point : B90	Load Comb.: TOTAL
Maximum Y :	2337	Point : A50	Load Comb.: TOTAL
Maximum Z :	264	Point : A10	Load Comb.: TOTAL
Max. total:	2342	Point : A50	Load Comb.: TOTAL

SYSTEM SUMMARY

Maximum sustained stress

Point	: A10
Stress psi	: 1731
Allowable psi	: 16700
Ratio	: 0.10
Load combination	: GR + Max P

Maximum displacement stress

Point	: A10
Stress psi	: 4467
Allowable psi	: 25050
Ratio	: 0.18
Load combination	: Cold to T1

Maximum occasional stress

Point	: A10
Stress psi	: 5791
Allowable psi	: 22211
Ratio	: 0.26
Load combination	: Sus. + R1

Maximum hoop stress

Point	: A00
Stress psi	: 2010
Allowable psi	: 16700
Ratio	: 0.12
Load combination	: Max P

Maximum sustained stress ratio

Point	: A10
Stress psi	: 1731
Allowable psi	: 16700
Ratio	: 0.10
Load combination	: GR + Max P

Maximum displacement stress ratio

Point	: A10
Stress psi	: 4467
Allowable psi	: 25050
Ratio	: 0.18
Load combination	: Cold to T1

S Y S T E M S U M M A R Y

Maximum occasional stress ratio

Point	: A10
Stress psi	: 5791
Allowable psi	: 22211
Ratio	: 0.26
Load combination	: Sus. + R1

Maximum hoop stress ratio

Point	: A00
Stress psi	: 2010
Allowable psi	: 16700
Ratio	: 0.12
Load combination	: Max P

* * * The system satisfies ASME B31.3 code requirements * * *
* * * for the selected options * * *

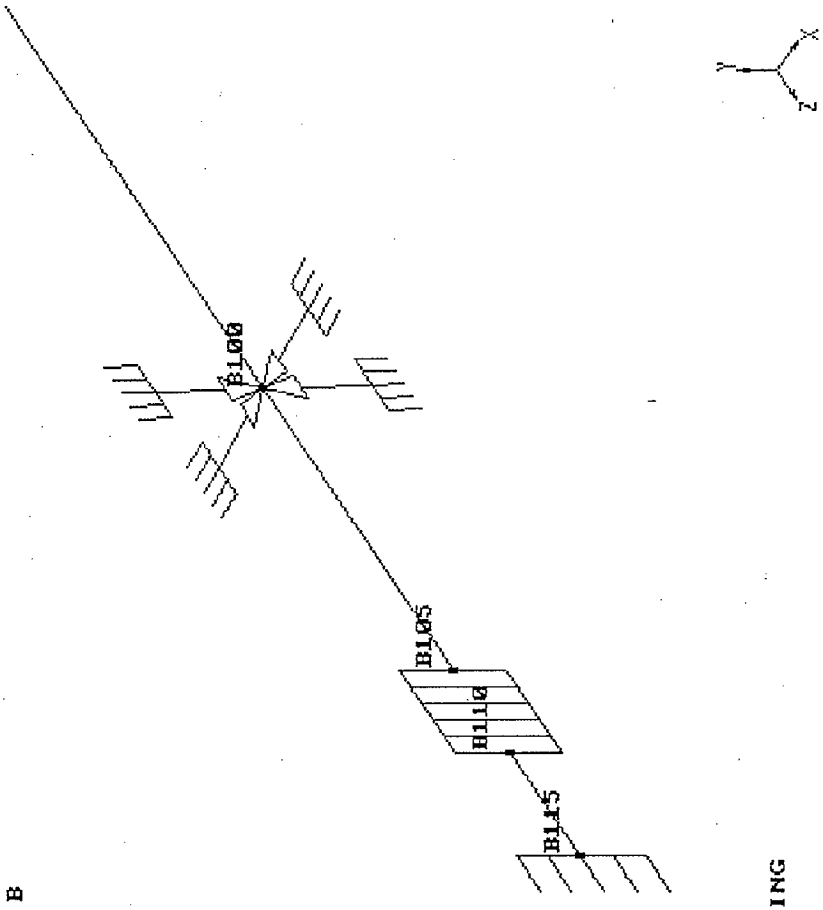

Point B105 B

EXHAUSTOR PIPING

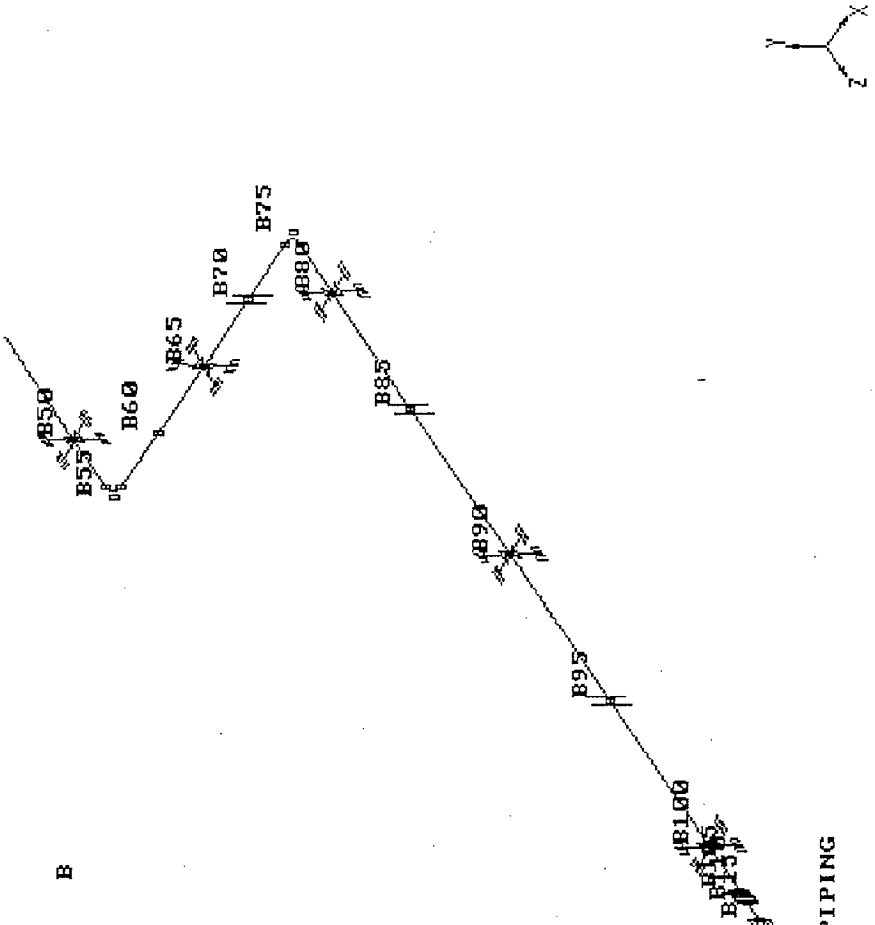
Point B90 B
B50
B53
B60
B65
B70
B75
B80
B85
B90
B95
B100
B105
B110
B115
EXHAUSTOR PIPING

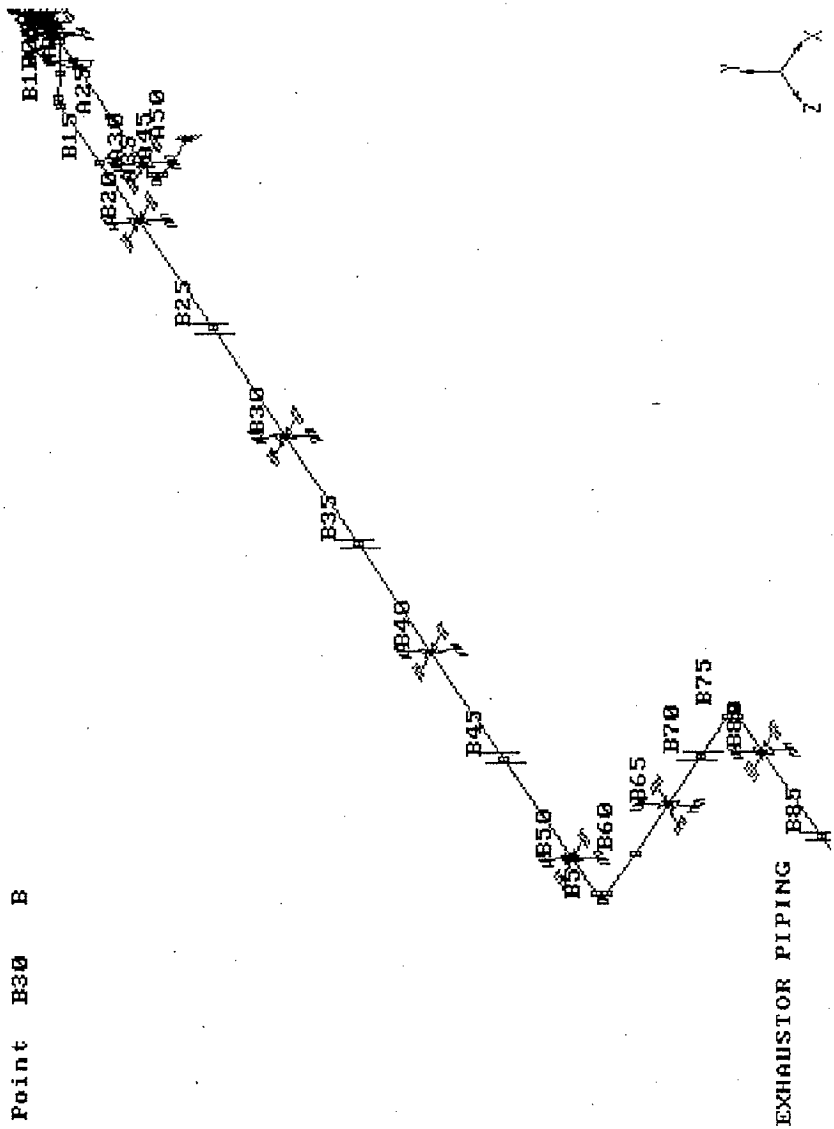
Point B30 B
B1
B15
B20
B25
B30
B35
B40
B45
B50
B55
B60
B65
B70
B75
B85
EXHAUSTOR PIPING
Y
Z

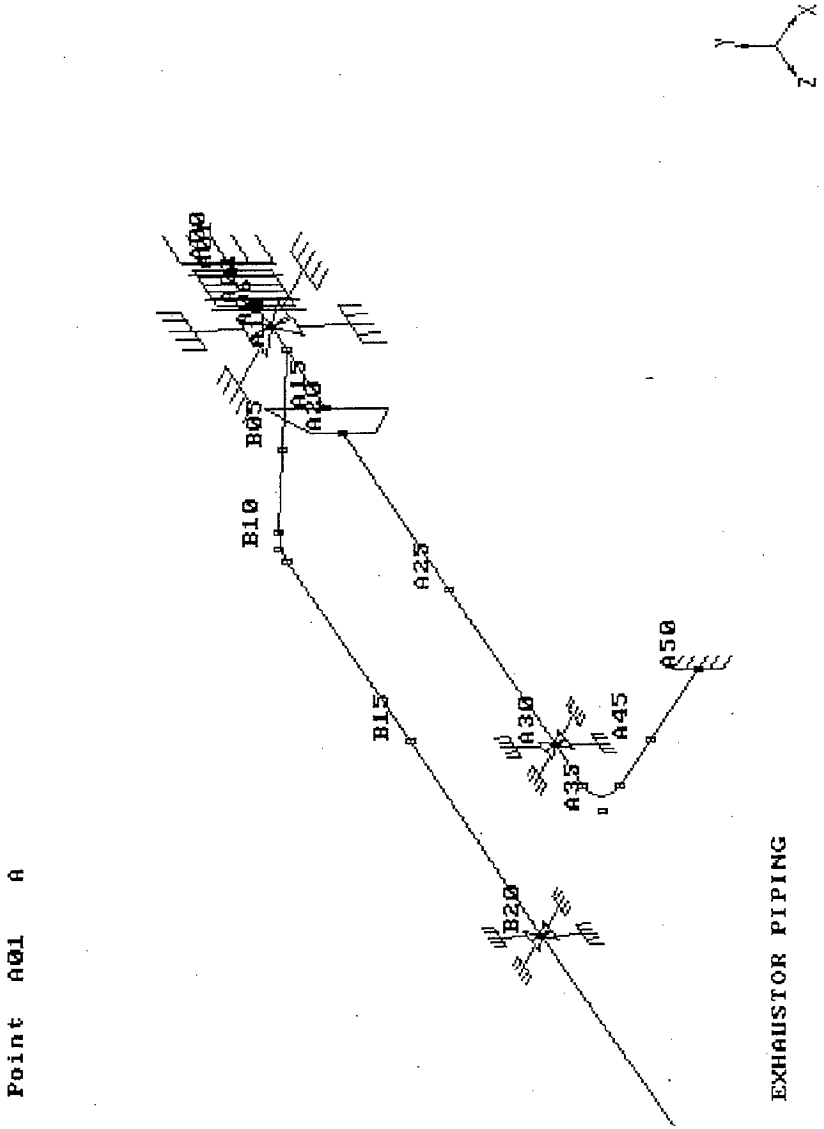
Point A01 A
A00
A05
A10
A15
A20
B05
B10
B15
B20
A25
A30
A35
A45
A50
X
Y
Z
EXHAUSTOR PIPING

APPENDIX C: DESIGN CALCULATIONS FOR TANKS BY-105/106 INSTALLATION

Fluor Daniel Northwest	CALCULATION IDENTIFICATION AND INDEX	Page 1 of ~~24~~ 21 Date 4-14-97

This sheet shows the status and description of the attached Design Analysis sheets.

Discipline Mechanical WO/Job No. POUX00 Calculation No. M-3

Project No. & Name 241-BY-105/106 500 CFM Exhauster Installation

Calculation Item

These calculations apply to:

Dwg. No. ECN 618793 Rev. No.

Dwg. No. Rev. No.

Other (Study, CDR) Rev. No.

The status of these calculations is:

[] Preliminary Calculations

[X] Final Calculations

[] Check Calculations (On Calculation Dated)

[] Void Calculation (Reason Voided)

Incorporated in Final Drawings? [] Yes [X] No

This calculation verified by independent "check" calculations? [] Yes [] No

Original and Revised Calculation Approvals:

	Rev. 0 Signature/Date	Rev. 1 Signature/Date	Rev. 2 Signature/Date
Originator	5-29-97		
Checked by	5-29-97		
Approved by	5/29/97		
Checked Against Approved Vendor Data			

INDEX

Design Analysis Page No.	Description
3	Analysis of Piping
3	Analysis of Piping Support
5	Exhauster Inlet Analysis
8	Displacement at Expansion Joints
10	Reactions at Tank Connections
14	Missile Impact Analysis
~~15~~ 14	Wind Loading Analysis
~~17~~ 15	Ventilation Pressure Losses
	Attachments
	Miscellaneous Vendor and Analysis Information
	Autopipe Analysis

Fluor Daniel Northwest, Inc.

Calc. No. M-3
Revision 0
Page No. 2 of 21

DESIGN ANALYSIS

Client LMHC
Subject 241-BY-105/106 500 CFM Exhauster Installation
Location 241-BY-105/106

WO/Job No. E40690
Date 4/14/97 By C. M. Keller
Checked 5/28/97 By D. A. Moody
Revised By

OBJECTIVE:

Perform analysis on BY-105/106 exhauster installation (ECN 618793) to verify stresses are within acceptable values and to determine expected pressure drop in the ventilation ducting.

CRITERIA:

The exhauster and associated piping are analyzed using Safety Class 2 design loads provided in reference 1. Piping is analyzed using criteria specified in the ASME B31.3 Process Piping Code. Structural members have been analyzed using criteria specified in reference 3.

ASSUMPTIONS/GIVENS:

Piping stresses and support reactions are contained in the piping analysis provided in the Attachments section. Analysis of the exhauster condensate piping in reference 6 is considered a governing case.

CALCULATION METHOD: Hand calculations and Autopipe analysis have been used to verify adequacy of the design.

REFERENCES:

1) Design of Expansion Anchors, GC-ANCR-01, Rev 1, ICF Kaiser Hanford Company

2) Minimum Design Loads for Buildings and Other Structures ASCE 7-88, A.S.C.E.

3) Manual of Steel Construction, Allowable Stress Design, 9th Edition, American Institute of Steel Construction, 1989

4) Marks Standard Handbook for Mechanical Engineers, 9th edition, McGraw-Hill

5) 1993 ASHRAE Handbook Fundamentals, American Society of Heating, Refrigeration and Air-Conditioning Engineers, Inc.

6) Installation Piping Analysis, Job #E40690, Calculation M-2 Rev 0, C. M. Keller, 1997

7) Mechanical Engineering Design, 4th edition, Shigley and Mitchell, McGraw-Hill

8) Cameron Hydraulic Data, 16th Edition, Ingersoll-Rand, 1979.

9) Design Loads for facilities, GC-LOAD-01, Rev 1, ICF Kaiser Hanford Company

10) Installation Piping Analysis, Job #P4H514, Calculation M-1 Rev 1, B. M. Koons, 4/30/96

KAISER ENGINEERS
HANFORD

DESIGN ANALYSIS

Calc. No. M-3
Revision 0
Page No. 3 of 21

Client	WO/Job No. E40690	
Subject	Date 4/14/97	By CM KELLER
	Checked 5/28/97	By DA MOODY
Location	Revised	By

1) ATTACHED AUTOPIPE ANALYSIS DETERMINED PIPING STRESSES TO BE WITHIN ALLOWABLES PER ASME B31.3 PROCESS PIPING CODE.

2) ANALYZE PIPE SUPPORTS USING REACTION FORCES FROM AUTOPIPE ANALYSIS AND WIND LOADING DETERMINED IN CALCULATION M-2.

WORST CASE HORIZONTAL LOADING IS SUPPORT B65. MAXIMUM LOADING OCCURS DUE TO GRAVITY, THERMAL AND WIND LOADS.

VERTICAL 504#
HORIZONTAL 50# (PARALLEL TO PIPE RUN)
HORIZONTAL 162# (PERPENDICULAR TO PIPE RUN)
HORIZ. WIND 344#

CHECK OVERTURNING OF SUPPORT

ELEVATION AT PIPE ℄ IS:

$$653.10' - \frac{(28' + 27.7')\left(\frac{1/8''\ \text{SLOPE}}{\text{FT}}\right)}{12} = 652.5'$$

AVG GRADE ELEVATION IS: $\frac{1}{2}(648' + 649') = 648.5'$

DISTANCE FROM GRADE TO PIPE ℄ IS:

$$(652.5' - 648.5')\,12 = 48''$$

KAISER ENGINEERS
HANFORD

DESIGN ANALYSIS

Calc. No. M-3
Revision 0
Page No. 4 of 21

Client	WO/Job No. E40690	
Subject	Date 4/14/97	By CM KELLER
	Checked 5/28/97	By DA MOODY
Location	Revised	By

OVERTURNING MOMENT IS:

$$M_o = (344 + 162)(48) = 24288 \text{ in}\cdot\text{lb}$$

RESTORING MOMENT IS: ($\rho_{concrete} = 150\ \#/ft^3$)

$$M_R = \left[9 ft^3 (150\ \#/ft^3) + 504\#\right](18'') = 33372 \text{ in}\cdot\text{lb}$$

$$2/3\ M_R = 22248 \text{ in}\cdot\text{lb}$$

$$24288 > 22248 \text{ in}\cdot\text{lb} \quad \text{NOT OK}$$

CHECK WITH 3'X4' CONCRETE BASE

$$M_R = \left[12(150) + 504\right](24'') = 55296 \text{ in}\cdot\text{lb}$$

$$2/3\ M_R = 36864 \text{ in}\cdot\text{lb}$$

$$24288 < 36864 \quad \text{OK}$$

∴ Concrete base for anchors needs to be increased to 3'X4' for a 2/3 safety margin for overturning.

3) Maximum bending moment on the pipe support is only slightly (<10%) greater than used in support analysis for calculation M-2. Margin of safety in that analysis justifies not analyzing the pipe supports for this installation. Support design was determined adequate in calculation M-2.

KAISER ENGINEERS
HANFORD

DESIGN ANALYSIS

Calc. No. M-3
Revision 0
Page No. 5 of 21

Client	WO/Job No. E40690	
Subject	Date 4/14/97	By CRAIG M. KELLER
	Checked 5/28/97	By DA MOODY
Location	Revised	By

(4) EVALUATE STRESS ON EXHAUSTER INLET:

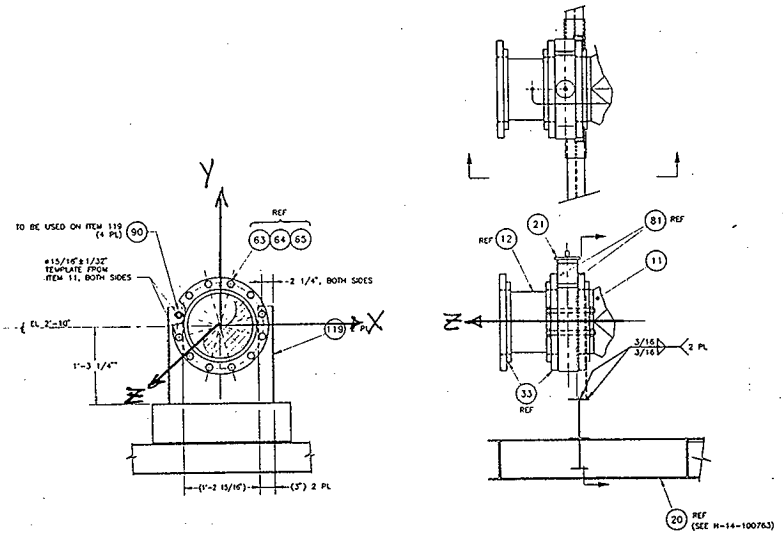

CHECK STRESS ON INLET SUPPORT PN 119.

USE RESTRAINT REACTIONS FROM PIPING ANALYSIS FOR POINT A00 ANCHOR. SUPPORT IS 3X2X1/4 CS ANGLE.

ANGLE PROPERTIES: ref

$A = 1.19\ in^2$ $\quad \sigma_y = 36\ KSI$, $\sigma_{ALL} = .6\sigma_y = 22\ KSI$

$I_{xx} = .392\ in^4$ $\quad I_{zz} = 1.09\ in^4$

$S_{xx} = .260\ in^4$ $\quad S_{zz} = .542\ in^4$

KAISER ENGINEERS
HANFORD

DESIGN ANALYSIS

Calc. No. M-3
Revision 0
Page No. 6 of 21

Client	WO/Job No. E40690	
Subject	Date 4/14/97	By CRAIG M. KELLER
	Checked 5/28/97	By DA MOODY
Location	Revised	By

REACTIONS ON EXHAUSTER INLET:

$F_x = 26^{\#}$ $\quad M_x = 193\ ft\cdot lb$

$F_y = 408^{\#}$ $\quad M_y = 10\ ft\cdot lb$

$F_z = 32^{\#}$ $\quad M_z = 9\ ft\cdot lb$

REACTIONS ON INLET SUPPORT ARE AS FOLLOWS:

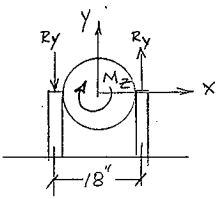

REACTION DUE TO M_z:

$9\ ft\cdot lb = 2R_y(9/12')$ $\Rightarrow R_y = 6^{\#}$

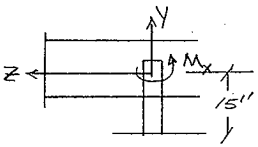

REACTION DUE TO M_x:

$193\ ft\cdot lb = 2R_x(15''/12)$ $\Rightarrow R_z = 77.2^{\#}$

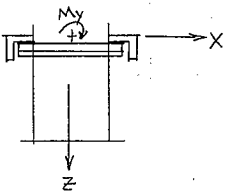

REACTION DUE TO M_y:

$10\ ft\cdot lb = 2R_z(9/12'')$ $\Rightarrow R_z = 6.7^{\#}$

TOTAL SUPPORT FORCES:

$F_x = 26^{\#}$

$F_y = 408^{\#} + 6^{\#} = 414^{\#}$

$F_z = 32^{\#} + 77.2 + 6.7^{\#} = 116^{\#}$

KAISER ENGINEERS
HANFORD

DESIGN ANALYSIS

Calc. No. M-3
Revision 0
Page No. 7 of 21

Client	WO/Job No. E40690	
Subject	Date 4-14-97	By CRAIG M. KELLER
	Checked 5-28-97	By D.A. MOODY
Location	Revised	By

For Combined compression and bending,

$$\frac{\sigma_a}{S_a} + \frac{\sigma_{bx}}{S_{bx}} + \frac{\sigma_{bz}}{S_{bz}} \leq 1 \quad \text{ref 3 eq H1-3}$$

where, σ_a = Axial compressive stress

σ_{bx} = Bending stress in x-dir

σ_{bz} = Bending stress in z-dir

S_a, S_{bx}, S_{bz} = Allowable stresses = 22 ksi

$$\sigma_a = \frac{F_y}{A} = \frac{414^{\#}}{1.19 in^2} = 348 \text{ psi}$$

$$\sigma_{bx} = \frac{F_x(15'')}{S_{xx}} = \frac{26(15)}{.260} = 1500 \text{ psi}$$

$$\sigma_{bz} = \frac{F_z(15'')}{S_{zz}} = \frac{116(15)}{.542} = 3210 \text{ psi}$$

$$\frac{348 + 1500 + 3210}{22\,000} = .23 < 1 \quad \text{OK}$$

KAISER ENGINEERS
HANFORD

DESIGN ANALYSIS

Calc. No. MA-3
Revision 0
Page No. 8 of 21

Client	WO/Job No. E40690	
Subject	Date 4-14-97	By CRAIG M. KELLER
	Checked 5/28/97	By DA MOODY
Location	Revised	By

(3) CHECK DISPLACEMENT AT EXPANSION JOINT LOCATIONS:

ϕ12" EXPANSION JOINT, PATHWAY 12CSFF508C-M1

ALLOWABLE DISPLACEMENTS:

AXIAL: 3.28"

LATERAL: 0.55"

ANGULAR: 10°

TORSION: .055°

CALCULATED DISPLACEMENT POINT A02 IN PIPING ANALYSIS

TRANSLATION:	ROTATION:
X - .009" (LATERAL)	X - .086° (ANGULAR)
Y - .059" (LATERAL)	Y - .035° (ANGULAR)
Z - .051" (AXIAL)	Z - .002° (TORSION)

∴ TRANSLATION AND ROTATIONS ARE WITHIN ALLOWABLE VALUES FOR ϕ12" EXPANSION JOINT AT EXHAUSTER INLET.

ϕ6" EXPANSION JOINT, PATHWAY 6CSFF5012C-M1

ALLOWABLE DISPLACEMENTS:

AXIAL: 2.46"

LATERAL: .84"

ANGULAR: 10°

TORSION: .089°

KAISER ENGINEERS
HANFORD

DESIGN ANALYSIS

Calc. No. M-3
Revision 0
Page No. 9 of 21

Client	WO/Job No.	E40690	
Subject	Date 4-14-97	By	CRAIG M. KELLER
	Checked 5-28-97	By	D A MOODY
Location	Revised	By	

CALCULATED DISPLACEMENTS AT POINT C70 (B4-105 INLET):

	TRANSLATION	ROTATION
X	.033" (LATERAL)	.010° (ANGULAR)
Y	.005" (LATERAL)	.016° (ANGULAR)
Z	.155" (AXIAL)	.005° (TORSION)

CALCULATED DISPLACEMENTS AT POINT B175 (B4-106 INLET)

	TRANSLATION	ROTATION
X	.314 < .222 LATERAL, .222 AXIAL	.196° (ANG + TORS)
Y	.089 (LATERAL)	.098° (ANGULAR)
Z	.177 < .125 LATERAL, .125 AXIAL	.022° (ANG + TORS)

∴ TRANSLATION AND ROTATIONS ARE WITHIN ALLOWABLE VALUES FOR ϕ 6" EXPANSION JOINTS AT BOTH LOCATIONS.

KAISER ENGINEERS
HANFORD

DESIGN ANALYSIS

Calc. No. M-3
Revision 0
Page No. 10 of 21

Client	WO/Job No.	E40690	
Subject	Date 4-14-97	By	CRAIG M. KELLER
	Checked 5-28-97	By	DA MOODY
Location	Revised	By	

(6) CHECK REACTIONS AT TANK CONNECTIONS:

TANK BY-105: ANCHOR POINT C80 IN PIPING ANALYSIS

$F_x = 7$ $M_x = 128$

$F_y = 98$ $M_y = 8$

$F_z = 19$ $M_z = 3$

∴ REACTIONS AT TANK BY-105 12" RISER ARE TO SMALL TO JUSTIFY FURTHER ANALYSIS.

TANK BY-106: ANCHOR PT B200 IN ANALYSIS

$F_x = 108^{\#}$ $M_x = 935$ ft·lb

$F_y = 908$ $M_y = 119$

$F_z = 102$ $M_z = 827$

(7) POINT B200 IS PIPING ATTACHMENT TO CONDENSOR PIT COVER PLATE. ANALYZE STRESS IN WELD ATTACHMENT OF PIPE TO PLATE, PLATE STRESSES, AND PLATE ATTACHMENT TO CONDENSOR PIT.

KAISER ENGINEERS
HANFORD

Calc. No. NA-3
Revision 0
Page No. 11 of 21

DESIGN ANALYSIS

Client	WO/Job No.	E40690	
Subject	Date	4-14-97	By CRAIG M. KELLER
	Checked	5-28-97	By DA MOODY
Location	Revised		By

PT B200 IN CONNECTION PT

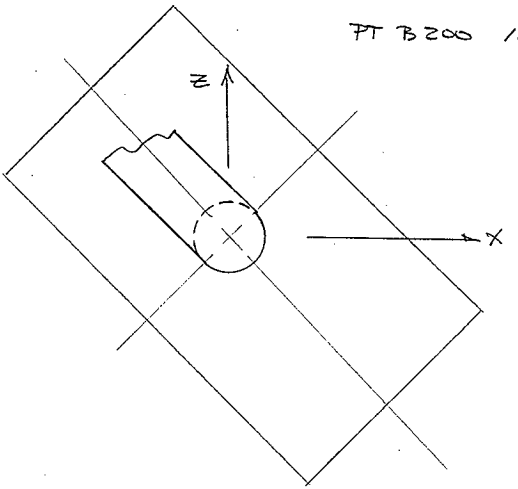

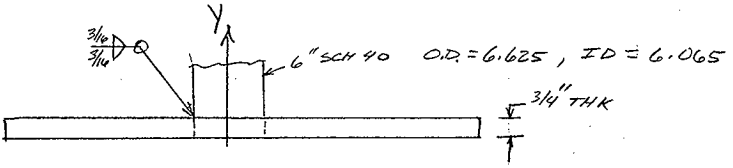

WELD LOADING

$F_x = 108^{\#}$ HORIZONTAL SHEAR

$F_y = 908^{\#}$ NORMAL STRESS

$F_z = 102^{\#}$ HORIZONTAL SHEAR

$M_x = 935$ ft·lb Bending STRESS

$M_y = 119$ ft·lb TORSION (PRODUCES SHEAR)

$M_z = 827$ ft·lb Bending STRESS

KAISER ENGINEERS
HANFORD

DESIGN ANALYSIS

Calc. No. AA-3
Revision 0
Page No. 12 of 21

Client	WO/Job No. E40690	
Subject	Date 4-14-97	By CRAIG M. KELLER
	Checked 5-28-97	By DA MOODY
Location	Revised	By

ALLOWABLE WELD STRESS IS SAME AS PIPE

per ASME B31.3 $\sigma_{all} = 16.7$ KSI

WELD AREA $= (.707\, h\, \pi D)\, 2$ BOTH WELDS

$= (.707)(.188)(\pi)(6.625)(2) = 5.53\ in^2$

Shear Stress due to torsion LOAD My: ref 7 sect 9-3

$$\tau = \frac{Mr}{J}$$

$J = .707\, h\, J_u$ J_u = Unit Polar Moment of Inertia

$J_u = 2\pi r^3$

$J = .707(.188)(2\pi)(3.31\ in)^3 = 30.29\ in^4$

$J_{TOTAL} = 2(30.29) = 60.57\ in^4$ for Both Welds

$$\tau = \frac{119\ ft\text{-}lb\ (12\ in/ft)(3.31'')}{60.57\ in^4} = 78\ psi$$

Shear Stress due to Shear Forces Fx & Fz:

$$\tau' = \frac{F}{A} = \frac{(108^2 + 102^2)^{1/2}}{5.53\ in^2} = 27\ psi$$

TOTAL Shear $\tau_{TOT} = 78 + 27 = 105\ psi$

KAISER ENGINEERS
HANFORD

DESIGN ANALYSIS

Calc. No. M-3
Revision 0
Page No. 13 of 21

Client
Subject
Location

WO/Job No. E40690
Date 4-14-97 By CRAIG M. KELLER
Checked 5-28-97 By DA MOODY
Revised By

Normal Stress due to Bending Moments M_x & M_z:

$$\sigma = \frac{Mc}{I} \qquad I = .707\,h\,I_u \qquad \text{ref 7 Sect 9-4}$$

I_u = Unit Moment of Inertia

$$I_u = \pi r^3 = 113.9\ in^3$$

$$\sigma_{bx} = \frac{M_x c}{I} = \frac{935\,ft\text{-}lb\,(12\,in/ft)(3.13)}{.707\,(.188)(113.9)\ 2} = 1160\ psi \text{ per Weld}$$

$$\sigma_{bz} = \frac{M_z c}{I} = \frac{827\,(12)(3.13)}{.707\,(.188)(113.9)(2)} = 1026\ psi \text{ per Weld}$$

Normal Stress due to Force F_y:

$$\sigma_y = \frac{F_y}{A} = \frac{908}{5.53} = 164\ psi \text{ per Weld}$$

By comparing Normal AND Shear stresses on the welds to allowable STRESS (16.7 ksi), the weld size is adequate.

(8) Cover Plate is 60" x 42" x 3/4"

Analyze plate for DISTRIBUTED LOAD of 250 psf.

Distributed load is due to potential operations ACTIVITIES.

KAISER ENGINEERS
HANFORD

Calc. No. M-3
Revision 0
Page No. 14 of 21

DESIGN ANALYSIS

Client	WO/Job No. E40690	
Subject	Date 4-14-97	By CRAIG M. KELLER
	Checked 5-28-97	By D A MOODY
Location	Revised	By

MAXIMUM plate STRESS $S_m = K \frac{W R^2}{t^2}$ ref 4 pg 5-52

$R/r = \frac{60}{42} = 1.4 \Rightarrow K = .487$ Table 5.2.20

$$S_m = .487 \frac{250\ \#/ft^2 \left(\frac{1\ ft^2}{144\ in^2}\right)(60\ in)^2}{(.75\ in)^2} = 5411\ psi \quad OK$$

∴ Plate THICKNESS IS ADEQUATE.

(9) Analysis for MISSILE IMPACT AND WIND LOADING ON THE VENTILATION DUCTWORK HAS Previously been performed IN CALCULATION M-2. SATISFACTORY RESULTS IN THAT ANALYSIS IS APPLICABLE TO THIS INSTALLATION.

ANALYTICAL CALCULATIONS

Page 15 of 21

Subject Calc 4-3 JOB E40690

Originator A.F. Wellner Date 4-2-97

Checker C.M. KELLER Date 4-14-97

(12) Calculate expected pressure drop from atmosphere to exhauster inlet for both runs of ductwork.

Use Saturated air at 140°F.

Use Q = 250 CFM per duct run.

Assume 1" wg pressure drop for inlet filter

Determine ΔP for the following:

1) inlet HEPA filter and riser (both tanks)
2) Outlet riser and tee connection (BY-105)
3) Ductwork riser to exhauster - long run (BY-106)
4) Ductwork riser to exhauster - short run (BY-105)
5) Exhauster inlet fitting
6) Outlet riser (BY-106)

1) Inlet filter + riser (Typical arrangement)

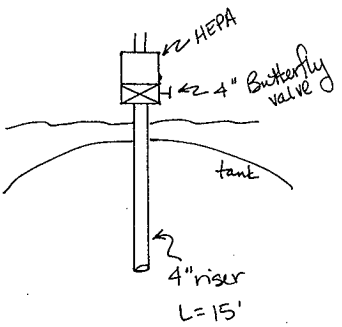

Hepa filter ΔP = 1" WG

Equivalent length method

Riser L = 15'
Entrance loss Le = 20' } Ref. 4
4" Butterfly valve Le = 15.1' Ref. 8

$Le_{inlet} = 15 + 20 + 15.1 = \underline{\underline{50.1'}}$

ANALYTICAL CALCULATIONS

Page 16 of 21

Subject Calc M-3 JOB E40690

Originator A.F. Wellner Date 4-2-97

Checker C.M. KELLER Date 4-14-97

2) Outlet Riser & tee connection tank BY-105

Assume loss for side outlet on a 12 X 6 reducing tee is equivalent to a 12" side outlet tee followed by a 12 X 6 contraction

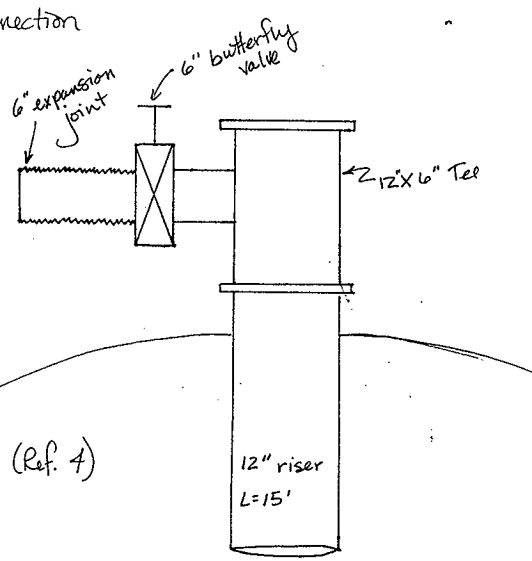

Use equivalent feet method:

Exit loss $L_e = 47'$
12" riser $L = 15'$
12" side out tee $L_e = 60'$
12"X 6" contraction $L_e = 11'$
(Ref. 4)

6" Butterfly valve $L_e = 22.7'$ (Ref. 8)
6" Expansion joint $L_e = 8'$ estimated

Total $L_{e_{12"riser}} = 47 + 15 + 60 + 11 = \underline{133'}$

4) Ductwork (BY-105) [Note 3) follows on next page, out of sequence]

2 6" 45° elbows $L_e = 8'$ each
6" pipe $L = 7'\ 3.75" + 10' + 8.6 = 25.9'$
↑ conservative

6" butterfly valve $L_e = 22.7'$
6" expansion joint $L_e = 8'$

$L_{e_{105}} = 8 + 8 + 25.9 \cancel{= 41.9} + 22.7 + 8 = 72.6'$

ANALYTICAL CALCULATIONS

Page 17 of 24

Subject Calc M-3 JOB E40690

Originator A.F. Wellner Date 4-2-97

Checker C.M. KELLER Date 4-14-97

3) Ductwork - long run (BY-106)

3 6" 45° elbow $L_e = 8'$ each
2 6" 90° long radius elbow $L_e = 10'$ each } Ref. 4

6" pipe $L = 59' 2.5" + 28' + 33' 8.5" + 10' + 12.6' + 11.1'$
$= 154.6'$

$L_{e_{106}} = 8 + 8 + 8 + 10 + 10 + 154.6 = \underline{\underline{198.6'}}$

6) Outlet riser (BY-106)

Air exits the tank through a 24" pipe. The pipe ~~is~~ run is short and exits into a condenser pit. This pit is 3' x 6' x 12' (approx). Assume the losses are negliable in this area.

6" exit $L_e = 25'$
6" 90° LR. elbow $L_e = 10'$ } Ref. 4
6" btrfly valve $L_e = 22.7'$ Ref. 8
6" exp. joint $L_e = 8'$ estimated

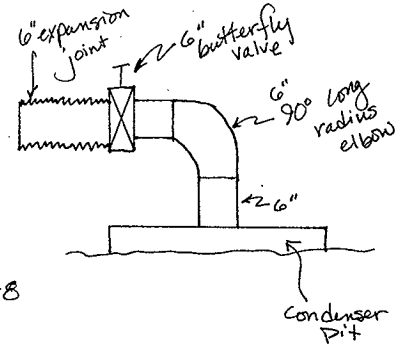

Total $L_{e_{106\,out}} = 25 + 10 + 22.7 + 8$
$= \underline{\underline{65.7'}}$

ANALYTICAL CALCULATIONS

Page 18 of 21

Subject Calc M-3 JOB E40690

Originator A.F. Wellner Date 4-2-97

Checker C.M. KELLER Date 4-14-97

5) Exhauster inlet fitting

Use Ref. 5

Use EDS-10 Symmetrical Wye, 60°, with reduction

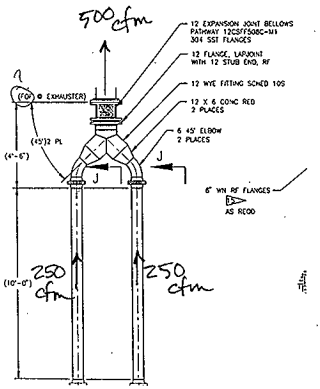

$A_{b_1} = A_{b_2} = \pi r^2 = \pi 3^2 = 28.3 \text{ in}^2$

$A_c = \pi 6^2 = 113 \text{ in}^2$

$\frac{A_{b_1}}{A_c} = \frac{A_{b_2}}{A_c} = .25$ round to .3

$Q_{b_1} = Q_{b_2} = 250$ cfm

$Q_c = 500$ cfm

$\frac{Q_{b_1}}{Q_c} = \frac{Q_{b_2}}{Q_c} = .5$

$C_{b_1} = 0.86$

$C_{b_2} = 0.86$

Calculate loss: $\Delta p = C p_v$ p. 32.6, eqn 29

Δp = pressure loss (in. W.G.)

C = loss coefficient

p_v = velocity pressure (in. W.G.)

$p_v = \rho \left(\frac{V}{1097}\right)^2$ V = velocity (fpm)

ρ = air density (lbm/ft³)

For ~~air~~ saturated air @ 140°F

$\rho = .0613$ lbm/ft³ Ref. 6

$V = 1246$ ft/min for 250 cfm in 6" sch. 40 pipe $V = \frac{Q}{A}$

ANALYTICAL CALCULATIONS

Page 19 of 21

Subject Calc M-3 JOB E40690

Originator A.F. Wellner Date 4-2-97

Checker C.M. KELLER Date 4-14-97

$$P_v = .0613 \frac{lbm}{ft^3} \left(\frac{1246\ ft/min}{1097} \right)^2 = .0791 \text{ in. W.G.}$$

$$\Delta p = 0.86(.0791) = .068 \text{ in. W.G.}$$

Δp is same for both sides of wye exhauster inlet.

Determine pressure losses for 250 cfm in the remaining piping system (4" inlet riser, 12" outlet, 105 duct, 106 outlet, 106 duct)

$$\Delta p = f\left(\frac{12L}{D}\right) \rho \left(\frac{V}{1097}\right)^2$$ p 32.4 eqn 19

Δp = pressure loss (in W.G.)

f = friction factor (Moody diagram)

L = duct length

D = duct diameter

ρ = .0613 lbm/ft3 (from above)

V = velocity (fpm)

R_e = Reynold's number = $\frac{VD}{\nu}$

ν = kinematic viscosity = 2.12 E-4

$$V = \frac{Q}{A} = \frac{250\ cfm}{(\pi/4)(D/12)^2}$$

= 2865 fpm 4" duct

= 1246 fpm 6" duct

= 318 fpm 12" duct

ANALYTICAL CALCULATIONS

Page 20 of 21

Subject Calc M-3 JOB E40690

Originator A.F. Wellner Date 4-2-97

Checker C.M. KELLER Date 4-14-97

$$Re = \frac{VD}{\nu} = \frac{(2865)(4/12)}{(2.12\,E\text{-}4)(60)}$$

~~75 E4~~

= 75000 4" duct

= 49000 6" duct

= 25000 12" duct

Roughness $\epsilon = .00015'$ (steel duct)

$$\epsilon/D = \frac{.00015}{4/12}$$

= .0005 4" duct

= .0003 6" duct

= .00015 12" duct

Friction factors (Moody diagram)

f = 0.021 4" duct

= 0.022 6" duct

= 0.024 12" duct

Calculate Δp for 100' of duct with 250 cfm

$$\Delta p = f\left(\frac{12L}{D}\right)\rho\left(\frac{V}{1097}\right)^2$$

4" duct $\Delta p = .021\left(\frac{12(100)}{4}\right)(.0613)\left(\frac{2865}{1097}\right)^2$

$\Delta p_4 = 2.6$ in W.G./100'

$\Delta p_6 = 0.35$ in W.G./100'

$\Delta p_{12} = 0.01$ in W.G./100'

ANALYTICAL CALCULATIONS

Page 21 of 21

Subject Calc M-3 JOB E40690

Originator A.F. Wellner Date 4-2-97

Checker C.M. KELLER Date 4-14-97

Calculate Δp for each duct run from tank inlet to exhauster inlet.

for BY-105

$$\Delta p_{105} = \underset{\text{hepa}}{1 \text{ in WG}} + \underset{\text{tank inlet}}{(50.1')(2.6 \text{ in WG}/100')} + \underset{\text{tank ~~riser~~ outlet}}{133'(.01 \text{ in W.G}/100')}$$
$$+ \underset{\text{duct run}}{\cancel{41.9'}\ 72.6'(0.35 \text{ in W.G.}/100')} + \underset{\text{exhauster inlet}}{.068 \text{ in W.G.}}$$

$\Delta p_{105} = 2.63$ in. W.G.

for BY-106

$$\Delta p_{106} = 1 \text{ in WG} + (50.1')(2.6 \text{ in WG}/100') + (65.7')(0.35 \text{ in WG}/100')$$
$$+ (198.6')(0.35 \text{ in WG}/100') + .068 \text{ in WG}$$

$\Delta p_{106} = 3.29$ in W.G.

Note: Most of the losses ~~of~~ are due to the tank inlet loss, which is 2.3 in W.G.

* A difference of ~~0.8~~ 0.7 in W.G. exists in the two duct runs. This is a small amount and should not cause any problems in balancing the whole system.

```
 *                          *******  **  *******   *******
***                 **      **    **  **  **    **  **
** **              ******    **    **  **  **    **  **
**   **    **   **  **   *****  *******  **  *******   *****
*********   **   **  **  **   **  **      **  **        **
**       **  **   **  **  **   **  **      **  **        **
**         **  *****   **   *****  **      **  **        *******
```

Pipe Stress Analysis and Design Program

Version: 4.60.03

Edition: Plus-DOS

Developed and Maintained by

Engineering Design Automation, Inc.
1600 Riviera Ave., Suite 300
Walnut Creek, CA 94596


```
*************************************************************
**                                                         **
**              AUTOPIPE SYSTEM DATA LISTING               **
**                                                         **
*************************************************************
```

SYSTEM NAME : BY105A

PROJECT ID : EXHAUSTOR PIPING
TANK BY-105 TO BY-106

PREPARED BY : M. Ahmed
M.M. AHMED

CHECKED BY : H. P. Shrivastava 4/9/97
H.SHRIVASTAVA

PIPING CODE : B31.3

AMBIENT TEMP. (deg F) : 70.0

COMPONENT LIBRARY : AUTOPIPE

MATERIAL LIBRARY : AUTOB313

MODEL REVISION NUMBER : 25

POINT DATA LISTING

POINT NAME	TYPE	OFFSETS (ft) X	Y	Z	PIPE ID	DESCRIPTION
*** SEGMENT A						
A00	Run	0	0	-0.50	12-IN	
A01	Flex	0	0	0.50		Wt= 137 lb , Ar= 121.0 sq.in Axial= 282.0 Tors= 14417.0 Y-Shear= 1665.0 Bend= 10.0 Z-Shear= 1665.0 Bend= 10.0
A02	Run	0	0	0.95		
A05	Run	0	0	0.05		
A10	Tee	0	0	0.75		
*** SEGMENT B						
A10	Tee	0	0	1.75	12-IN	
B05	Redu	0.88	0	0.88		
B10	Run	0.47	0	0.47	6-IN	
B15	Bend	0.22	0	0.22		Long Elbow, Radius = 9.00 inch Bend angle change = 45.00 deg SIF - In 2.27, Out = 1.89 Flex = 6.590
B20	Run	0	0	0.42		
B25	Run	0	0	1.00		
B30	Run	0	0	8.74		
B35	Run	0	0	0.99		
B40	Bend	0	0	0.50		Long Elbow, Radius = 9.00 inch Bend angle change = 45.00 deg SIF - In 2.27, Out = 1.89 Flex = 6.590
B50	Run	3.33	0	3.33		
B55	Bend	3.52	0	3.52		Long Elbow, Radius = 9.00 inch Bend angle change = 45.00 deg SIF - In 2.27, Out = 1.89 Flex = 6.590
B60	Run	0.72	0	0		
B65	Run	6.00	0	0		
B85	Run	10.00	0	0		
B90	Run	10.00	0	0		
B95	Run	6.65	0	0		
B100	Bend	0.75	0	0		Long Elbow, Radius = 9.00 inch Bend angle change = 90.00 deg Mid point at 50.00 percent SIF - In 2.27, Out = 1.89 Flex = 6.590
B105	Run	0	0	-6.50		
B107	Run	0	0	-8.00		
B110	Run	0	0	-7.00		

POINT DATA LISTING

POINT NAME	TYPE	OFFSETS (ft) X	Y	Z	PIPE ID	DESCRIPTION
B120	Run	0	0	-5.75		
B125	Bend	0	0	-0.75		Long Elbow, Radius = 9.00 inch Bend angle change = 90.00 deg SIF - In 2.27, Out = 1.89 Flex = 6.590
B130	Run	0.75	0	0		
B135	Run	5.00	0	0		
B140	Run	10.00	0	0		
B145	Run	10.00	0	0		
B150	Run	10.00	0	0		
B155	Run	10.00	0	0		
B160	Run	14.21	0	0		
B165	Bend	0.31	0	0		Long Elbow, Radius = 9.00 inch Bend angle change = 45.00 deg Mid point at 50.00 percent SIF - In 2.27, Out = 1.89 Flex = 6.590
B170	Run	4.41	0	4.41		
B175	Flex	2.38	0	2.38		Wt= 41 lb , Ar= 28.9 sq.in Axial= 240.0 Tors= 1833.0 Y-Shear= 338.0 Bend= 2.3 Z-Shear= 338.0 Bend= 2.3
B180	Valv	0.63	0	0.63		Rating = 150, Weight = 212 lb Surface factor = 4.30, SIF = 1.00
B185	Run	0.71	0	0.71		
B190	Bend	0.53	0	0.53		Long Elbow, Radius = 9.00 inch Bend angle change = 90.00 deg Mid point at 50.00 percent SIF - In 2.27, Out = 1.89 Flex = 6.590
B195	Run	0	-2.33	0		
B200	Run	0	-1.00	0		
*** SEGMENT C						
A10	Tee	0	0	1.75	12-IN	
C05	Redu	-0.88	0	0.88		
C10	Run	-0.47	0	0.47	6-IN	
C15	Bend	-0.22	0	0.22		Long Elbow, Radius = 9.00 inch Bend angle change = 45.00 deg SIF - In 2.27, Out = 1.89 Flex = 6.590
C20	Run	0	0	0.42		
C25	Run	0	0	1.00		

POINT DATA LISTING

POINT NAME	TYPE	OFFSETS (ft) X	Y	Z	PIPE ID	DESCRIPTION
C30	Run	0	0	8.73		
C35	Run	0	0	0.46		
C40	Bend	0	0	0.31		Long Elbow, Radius = 9.00 inch Bend angle change = 45.00 deg SIF - In 2.27, Out = 1.89 Flex = 6.590
C45	Run	0.22	0	0.22		
C50	Run	2.42	0	2.42		
C55	Run	2.42	0	2.42		
C60	Bend	0.22	0	0.22		Long Elbow, Radius = 9.00 inch Bend angle change = 45.00 deg SIF - In 2.27, Out = 1.89 Flex = 6.590
C65	Run	0	0	0.31		
C67	Run	0	0	2.61		
C70	Flex	0	0	2.00		Wt= 41 lb , Ar= 28.9 sq.in Axial= 240.0 Tors= 1833.0 Y-Shear= 338.0 Bend= 2.3 Z-Shear= 338.0 Bend= 2.3
C75	Run	0	0	0.88		
C80	Run	0	0	1.50		

Total weight of empty pipes : 4148 lb

COMPONENT DATA LISTING

POINT NAME	COORDINATE(ft) X	Y	Z	DATA TYPE	DESCRIPTION
*** SEGMENT A					
A00	0.00	0.00	-0.50	ANCHOR	Rigid Thermal movements : None 2 mass point(s)
				FLANGE	Weld neck SIF = 1.00 Rating = 150, Weight = 80 lb 2 mass point(s)
A01	0.00	0.00	0.00		
				FLANGE	Weld neck SIF = 1.00 Rating = 150, Weight = 80 lb 2 mass point(s)
A02	0.00	0.00	0.95		
				FLANGE	Weld neck SIF = 1.00 Rating = 150, Weight = 80 lb 2 mass point(s)
A05	0.00	0.00	1.00		
A10	0.00	0.00	1.75	TEE	Unreinforced tee SIF - In = 1.00, Out = 1.00
				INCLIN	ID : A10 1, Connected to Ground Skewed at : 0.000-0.707 0.707 Stiffness = RIGID
*** SEGMENT B					
A10	0.00	0.00	1.75	TEE	Unreinforced tee SIF - In = 1.00, Out = 1.00 2 mass point(s)
B05	0.88	0.00	2.63		2 mass point(s)
B10	1.35	0.00	3.10		2 mass point(s)
B15 N	1.35	0.00	3.10		2 mass point(s)
B15	1.56	0.00	3.32	TI	
B15 F	1.56	0.00	3.63		2 mass point(s)
B20	1.56	0.00	3.74		2 mass point(s)
				FLANGE	Weld neck SIF = 1.00 Rating = 150, Weight = 24 lb
B25	1.56	0.00	4.74	GUIDE	ID : B25 1, Connected to Ground Stiffness = RIGID Gap-down = 0.00, Above = 0.12 inch Gap-left = 0.12, Right = 0.12 inch Friction = 0.20 Gaps set Weightless 2 mass point(s)
B30	1.56	0.00	13.48	GUIDE	ID : B35 1, Connected to Ground Stiffness = RIGID Gap-down = 0.00, Above = 0.12 inch Gap-left = 0.12, Right = 0.12 inch Friction = 0.20 Gaps set Weightless 2 mass point(s)
B35	1.56	0.00	14.47		2 mass point(s)
				FLANGE	Weld neck SIF = 1.00 Rating = 150, Weight = 24 lb
B40 N	1.56	0.00	14.65		2 mass point(s)

COMPONENT DATA LISTING

POINT NAME	COORDINATE(ft) X	Y	Z	DATA TYPE	DESCRIPTION
B40	1.56	0.00	14.97	TI	
B40 F	1.78	0.00	15.18		2 mass point(s)
B50	4.89	0.00	18.30		2 mass point(s)
B55 N	8.20	0.00	21.60		2 mass point(s)
B55	8.41	0.00	21.82	TI	
B55 F	8.73	0.00	21.82		2 mass point(s)
B60	9.14	0.00	21.82		2 mass point(s)
				FLANGE	Weld neck SIF = 1.00
					Rating = 150, Weight = 24 lb
B65	15.14	0.00	21.82	GUIDE	ID : B65 1, Connected to Ground
					Stiffness = RIGID
					Gap-down = 0.00, Above = 0.12 inch
					Gap-left = 0.12, Right = 0.12 inch
					Friction = 0.20
					Gaps set Weightless
					2 mass point(s)
B85	25.14	0.00	21.82		2 mass point(s)
				FLANGE	Weld neck SIF = 1.00
					Rating = 150, Weight = 24 lb
B90	35.14	0.00	21.82	GUIDE	ID : B90 1, Connected to Ground
					Stiffness = RIGID
					Gap-down = 0.00, Above = 0.13 inch
					Gap-left = 0.13, Right = 0.13 inch
					Friction = 0.20
					Gaps set Weightless
					2 mass point(s)
B95	41.78	0.00	21.82		2 mass point(s)
				FLANGE	Weld neck SIF = 1.00
					Rating = 150, Weight = 24 lb
B100N	41.79	0.00	21.82		2 mass point(s)
B100	42.53	0.00	21.82	TI	
B100M	42.32	0.00	21.60		2 mass point(s)
B100F	42.53	0.00	21.07		2 mass point(s)
B105	42.53	0.00	15.32	GUIDE	ID : B105 1, Connected to Ground
					Stiffness = RIGID
					Gap-down = 0.00, Above = 0.12 inch
					Gap-left = 0.12, Right = 0.12 inch
					Friction = 0.20
					Gaps set Weightless
					2 mass point(s)
B107	42.53	0.00	7.32		2 mass point(s)
				FLANGE	Weld neck SIF = 1.00
					Rating = 150, Weight = 24 lb
B110	42.53	0.00	0.32	GUIDE	ID : B110 1, Connected to Ground
					Stiffness = RIGID
					Gap-down = 0.00, Above = 0.12 inch
					Gap-left = 0.12, Right = 0.12 inch
					Friction = 0.20
					Gaps set Weightless

COMPONENT DATA LISTING

POINT NAME	COORDINATE(ft) X	Y	Z	DATA TYPE	DESCRIPTION
					2 mass point(s)
B120	42.53	0.00	-5.43		2 mass point(s)
B125N	42.53	0.00	-5.44		2 mass point(s)
B125	42.53	0.00	-6.18	TI	
B125F	43.28	0.00	-6.18		2 mass point(s)
B130	43.28	0.00	-6.18		2 mass point(s)
				FLANGE	Weld neck SIF = 1.00
					Rating = 150, Weight = 24 lb
B135	48.28	0.00	-6.18	GUIDE	ID : B135 1, Connected to Ground
					Stiffness = RIGID
					Gap-down = 0.00, Above = 0.13 inch
					Gap-left = 0.13, Right = 0.13 inch
					Friction = 0.20
					Gaps set Weightless
					2 mass point(s)
B140	58.28	0.00	-6.18		2 mass point(s)
				FLANGE	Weld neck SIF = 1.00
					Rating = 150, Weight = 24 lb
B145	68.29	0.00	-6.18	GUIDE	ID : B145 1, Connected to Ground
					Stiffness = RIGID
					Gap-down = 0.00, Above = 0.12 inch
					Gap-left = 0.12, Right = 0.12 inch
					Friction = 0.20
					Gaps set Weightless
				LINE	ID : B145 2, Connected to Ground
					Stiffness = RIGID
					Gap-Back = 0.12, Forward = 0.12 inch
					Gaps set Weightless
					2 mass point(s)
B150	78.29	0.00	-6.18		2 mass point(s)
				FLANGE	Weld neck SIF = 1.00
					Rating = 150, Weight = 24 lb
B155	88.28	0.00	-6.18	GUIDE	ID : B155 1, Connected to Ground
					Stiffness = RIGID
					Gap-down = 0.00, Above = 0.13 inch
					Gap-left = 0.13, Right = 0.13 inch
					Friction = 0.20
					Gaps set Weightless
					2 mass point(s)
B160	102.49	0.00	-6.18		2 mass point(s)
B165N	102.50	0.00	-6.18		2 mass point(s)
B165	102.80	0.00	-6.18	TI	
B165M	102.78	0.00	-6.13		2 mass point(s)
B165F	103.02	0.00	-5.96		2 mass point(s)
B170	107.21	0.00	-1.77	GUIDE	ID : B170 1, Connected to Ground
					Stiffness = RIGID
					Gap-down = 0.00, Above = 0.13 inch
					Gap-left = 0.13, Right = 0.13 inch
					Friction = 0.20

COMPONENT DATA LISTING

POINT NAME	---COORDINATE(ft)--- X	Y	Z	DATA TYPE	DESCRIPTION
					Gaps set Weightless
					2 mass point(s)
B175	109.60	0.00	0.61		2 mass point(s)
				FLANGE	Weld neck SIF = 1.00
					Rating = 150, Weight = 24 lb
B180	110.23	0.00	1.24		2 mass point(s)
B185	110.94	0.00	1.95		2 mass point(s)
B190N	110.94	0.00	1.95		2 mass point(s)
B190	111.47	0.00	2.48	TI	
B190M	111.31	-0.22	2.32		2 mass point(s)
B190F	111.47	-0.75	2.48		2 mass point(s)
B195	111.47	-2.33	2.48		2 mass point(s)
				FLANGE	Weld neck SIF = 1.00
					Rating = 150, Weight = 24 lb
				FLANGE	Weld neck SIF = 1.00
					Rating = 150, Weight = 24 lb
B200	111.47	-3.33	2.48	ANCHOR	Rigid
					Thermal movements : None
*** SEGMENT C					
A10	0.00	0.00	1.75	TEE	Unreinforced tee
					SIF - In = 1.00, Out = 1.00
					2 mass point(s)
C05	-0.88	0.00	2.63		2 mass point(s)
C10	-1.35	0.00	3.10		2 mass point(s)
C15 N	-1.35	0.00	3.10		2 mass point(s)
C15	-1.56	0.00	3.32	TI	
C15 F	-1.56	0.00	3.63		2 mass point(s)
C20	-1.56	0.00	3.74		2 mass point(s)
				FLANGE	Weld neck SIF = 1.00
					Rating = 150, Weight = 24 lb
C25	-1.56	0.00	4.74	GUIDE	ID : C25 1, Connected to Ground
					Stiffness = RIGID
					Gap-down = 0.00, Above = 0.12 inch
					Gap-left = 0.12, Right = 0.12 inch
					Friction = 0.20
					Gaps set Weightless
					2 mass point(s)
C30	-1.56	0.00	13.46	GUIDE	ID : C30 1, Connected to Ground
					Stiffness = RIGID
					Gap-down = 0.00, Above = 0.12 inch
					Gap-left = 0.12, Right = 0.12 inch
					Friction = 0.20
					Gaps set Weightless
					2 mass point(s)
C35	-1.56	0.00	13.93		2 mass point(s)
				FLANGE	Weld neck SIF = 1.00
					Rating = 150, Weight = 24 lb
C40 N	-1.56	0.00	13.93		2 mass point(s)

COMPONENT DATA LISTING

POINT NAME	---COORDINATE(ft)--- X	Y	Z	DATA TYPE	DESCRIPTION
C40	-1.56	0.00	14.24	TI	
C40 F	-1.35	0.00	14.46		2 mass point(s)
C45	-1.35	0.00	14.46		2 mass point(s)
C50	1.08	0.00	16.88		2 mass point(s)
C55	3.50	0.00	19.30		2 mass point(s)
C60 N	3.50	0.00	19.30		2 mass point(s)
C60	3.72	0.00	19.52	TI	
C60 F	3.72	0.00	19.83		2 mass point(s)
C65	3.72	0.00	19.83		2 mass point(s)
C67	3.72	0.00	22.44	GUIDE	ID : C67 1, Connected to Ground
					Stiffness = RIGID
					Gap-down = 0.00, Above = 0.13 inch
					Gap-left = 0.13, Right = 0.13 inch
					Friction = 0.20
					Gaps set Weightless
					2 mass point(s)
C70	3.72	0.00	24.44		2 mass point(s)
C75	3.72	0.00	25.32		2 mass point(s)
C80	3.72	0.00	26.82	ANCHOR	Rigid
					Thermal movements : None

Number of points in the system : 243

P I P E D A T A L I S T I N G

Pipe ID/ Material	Nom/ Sch	O.D. inch	-----Thickness(inch)----- W.Th.	Corr	Mill	Insu	Ling	Spec Grav	Weight(lb/ft) Pipe	Other	Total
12-IN A312-TP304L	12 10S	12.750	0.180	0	0.02	2.00	0	0	24.73	4.51	29.24
6-IN A312-TP304L	6 40	6.625	0.280	0	0.04	2.00	0	0	19.42	2.63	22.05

M A T E R I A L D A T A L I S T I N G

Material Name	Pipe ID	Density lb/cu.ft	Pois. Ratio	Temper. deg F	Modulus E6 psi	Expans. in/100ft	Allow. psi
A312-TP304L	12-IN	501.0	0.30	70.0	28.30		16700.0
				150.0		0.8985	16700.0
A312-TP304L	6-IN	501.0	0.30	70.0	28.30		16700.0
				150.0		0.8985	16700.0

TEMPERATURE AND PRESSURE DATA

POINT NAME	CASE 1 PRESS. psi	CASE 1 TEMPER deg F	CASE 1 EXPAN. in/100ft	CASE 2 PRESS. psi	CASE 2 TEMPER deg F	CASE 2 EXPAN. in/100ft	CASE 3 PRESS. psi	CASE 3 TEMPER deg F	CASE 3 EXPAN. in/100ft
*** SEGMENT A									
A00	50.00	150	0.898						
A10	50.00	150	0.898						
*** SEGMENT B									
A10	50.00	150	0.898						
B10	50.00	150	0.898						
B200	50.00	150	0.898						
*** SEGMENT C									
A10	50.00	150	0.898						
C10	50.00	150	0.898						
C80	50.00	150	0.898						

ANALYSIS SUMMARY

Current model revision number : 25

Static - Date and Time of analysis ..... Apr 9, 1997 10:46 AM
Model Revision Number 25
Number of load cases 3
Load cases analyzed ..... GR T1 P1
Gaps/Friction/Yielding considered ..... Yes
Tolerance - Force, Displacement ..... 100.00 lb 0.0162 in
Friction - Factor, tolerance 1.00 0.10
Hanger design run ..... No
Cut short included ..... No
Occasional load analysis type ..... Nonlinear
Non-linear analysis summary file BY105A.LOG
Base load cases for nonlinear analysis
GR = None
T1 = GR
P1 = T1
Weight of contents included ..... Yes
Number of mass points per span 2
Pressure stiffening case 0
Water elevation for buoyancy loads .... Not considered

Modal - Date and Time of analysis ..... Apr 9, 1997 10:46 AM
Model Revision Number 25
Number of modes 64
Cutoff frequency (Hz) 100.0
Weight of contents included ..... Yes
Number of mass points per span 2
Pressure stiffening case 0
Water elevation for buoyancy loads .... Not considered

Response - Date and Time of analysis ..... Apr 9, 1997 10:48 AM
Model Revision Number 25
Number of load cases 1
Load cases analyzed R1
Date and time of modal analysis ..... Apr 9, 1997 10:46 AM
Number of modes 64
Cutoff frequency (Hz) 100.0
Model revision of modal analysis 25
Weight of contents included ..... Yes
Number of mass points per span 2
Pressure stiffening case 0
Water elevation for buoyancy loads .... Not considered

CODE COMPLIANCE COMBINATIONS

Combination	Category	Method	Load	Factor	Allowable	Remarks
GR + Max P	Sustain	Sum	Gravity	1.00	Automatic	Default
			Max Long	1.00		
Cold to T1	Expansion	Sum	Thermal 1	1.00	Automatic	Default
Sus. + R1	Occasion	Abs sum	Response 1	1.00	Automatic	Default
			Max Sus	1.00		
Max P	Hoop		Max Hoop	1.00	Automatic	Default

OTHER USER COMBINATIONS

Combination	Method	Load	Factor	Remarks
GR	Sum	Gravity	1.00	Default
T1	Sum	Thermal 1	1.00	Default
R1	Sum	Response 1	1.00	Default
GR+T1	Sum	Gravity	1.00	User
		Thermal 1	1.00	
TOTAL	Abs sum	GR+T1	1.00	User
		Response 1	1.00	

CODE COMPLIANCE

Y - Factor 0.40
Weld efficiency factor 1.00
Range reduction factor 1.00
Design Pressure Factor 1.00
Minimum stress ratio used in reports... 0.00
Include corrosion in stress calcs. .... Y
Include torsion in code stress ..... N
Include axial force in code stress .... N
Longitudinal pressure calculation PD/4t
Include rigorous pressure ..... N

RESPONSE SPECTRUM LOAD CASES :

Number of load cases analysed : 1

Load case 1 - R1

Missing mass : Yes
ZPA : No

Combination method : SRSS

X- Spectrum : SC2&3
Multiplier : 1.00

SC2&3

Freq(Hz)	Grav( )	Freq(Hz)	Grav( )	Freq(Hz)	Grav( )
0.100	0.01	0.160	0.02	0.250	0.04
0.400	0.06	0.600	0.09	1.100	0.17
1.640	0.25	8.000	0.25	12.000	0.20
20.000	0.16	33.000	0.12	100.000	0.12

Y- Spectrum : SC2&3
Multiplier : 0.67

SC2&3

Freq(Hz)	Grav( )	Freq(Hz)	Grav( )	Freq(Hz)	Grav( )
0.100	0.01	0.160	0.02	0.250	0.04
0.400	0.06	0.600	0.09	1.100	0.17
1.640	0.25	8.000	0.25	12.000	0.20
20.000	0.16	33.000	0.12	100.000	0.12

Z- Spectrum : SC2&3
Multiplier : 1.00

SC2&3

Freq(Hz)	Grav( )	Freq(Hz)	Grav( )	Freq(Hz)	Grav( )
0.100	0.01	0.160	0.02	0.250	0.04
0.400	0.06	0.600	0.09	1.100	0.17
1.640	0.25	8.000	0.25	12.000	0.20
20.000	0.16	33.000	0.12	100.000	0.12

F R E Q U E N C I E S

Mode Number	Frequency (Rads/sec)	Frequency (Hertz)	Period (Sec)	Participation factors X	Y	Z
1	40.8442	6.5006	0.154	0.025	-0.509	-0.018
2	46.2726	7.3645	0.136	0.844	0.020	-0.433
3	50.1897	7.9879	0.125	-0.151	-0.011	0.927
4	54.5562	8.6829	0.115	0.111	0.056	0.743
5	60.6447	9.6519	0.104	-1.277	-0.107	-0.846
6	67.4778	10.7394	0.093	0.220	-0.125	-0.395
7	72.9473	11.6099	0.086	0.221	-0.339	-1.149
8	76.1971	12.1271	0.082	-0.062	0.038	0.358
9	88.6147	14.1035	0.071	0.021	0.021	-0.176
10	89.1773	14.1930	0.070	0.262	0.186	0.181
11	91.7375	14.6005	0.068	-0.096	0.073	0.238
12	94.1530	14.9849	0.067	-0.578	-0.132	0.518
13	94.6746	15.0679	0.066	0.006	0.459	0.294
14	94.7149	15.0743	0.066	-0.002	0.105	-0.062
15	95.1935	15.1505	0.066	-0.103	0.030	0.006
16	95.3515	15.1757	0.066	0.036	-0.058	-0.111
17	96.7111	15.3920	0.065	0.517	0.003	-0.189
18	103.1916	16.4235	0.061	0.007	0.680	0.016
19	108.5483	17.2760	0.058	-0.794	0.025	0.791
20	110.2278	17.5433	0.057	-0.660	-0.794	-0.606
21	112.7832	17.9500	0.056	-0.037	0.451	-0.201
22	116.2506	18.5019	0.054	-0.002	0.198	0.777
23	119.6339	19.0403	0.053	0.048	-0.286	0.595
24	126.5198	20.1362	0.050	0.128	-0.007	-0.160

F R E Q U E N C I E S

Mode Number	Frequency (Rads/sec)	Frequency (Hertz)	Period (Sec)	Participation factors X	Y	Z
25	129.7317	20.6474	0.048	0.016	0.020	1.874
26	138.8725	22.1022	0.045	-0.001	-1.429	0.102
27	154.5663	24.6000	0.041	0.004	0.009	-0.035
28	155.4631	24.7427	0.040	-0.004	-0.014	-0.004
29	155.6375	24.7705	0.040	0.014	0.045	-0.049
30	157.0314	24.9923	0.040	0.000	-0.497	-0.037
31	175.4769	27.9280	0.036	0.033	0.009	-0.009
32	176.5639	28.1010	0.036	0.077	0.220	0.069
33	176.7980	28.1383	0.036	0.082	-0.005	-0.213
34	178.9646	28.4831	0.035	0.001	-0.196	-0.007
35	189.7171	30.1944	0.033	0.938	0.004	0.107
36	198.8696	31.6511	0.032	-0.026	0.493	0.006
37	200.7962	31.9577	0.031	0.195	0.070	-0.066
38	213.9692	34.0542	0.029	0.178	0.000	-0.620
39	219.7859	34.9800	0.029	-0.003	1.524	-0.002
40	222.3701	35.3913	0.028	-0.046	0.001	-0.126
41	224.0901	35.6650	0.028	0.008	-0.011	-0.012
42	254.9862	40.5823	0.025	-0.667	0.891	-0.667
43	308.7799	49.1439	0.020	0.001	0.000	0.227
44	316.7410	50.4109	0.020	-0.019	-0.075	-0.022
45	316.7859	50.4180	0.020	0.170	-0.008	0.116
46	319.7994	50.8977	0.020	0.008	0.065	0.053
47	325.8000	51.8527	0.019	-0.102	0.000	-0.197
48	342.5323	54.5157	0.018	-0.004	-0.431	0.002
49	357.9724	56.9731	0.018	-0.009	0.008	0.119

BY105A EXHAUSTOR PIPING FLUOR DANIEL NORTHWEST, INC.
04/09/97 TANK BY-105 TO BY-106 AutoPIPE+4.60 RESULT PAGE 6

F R E Q U E N C I E S

Mode Number	Frequency (Rads/sec)	Frequency (Hertz)	Period (Sec)	Participation factors X	Y	Z
50	365.6446	58.1941	0.017	0.006	0.007	0.042
51	386.4347	61.5030	0.016	-0.040	0.000	0.013
52	389.6849	62.0203	0.016	0.001	-0.045	-0.001
53	418.1972	66.5581	0.015	-0.005	0.185	0.123
54	431.2346	68.6331	0.015	-0.214	-0.038	-0.034
55	477.4528	75.9890	0.013	0.015	0.482	0.145
56	495.8765	78.9212	0.013	0.156	0.186	-0.015
57	549.4174	87.4425	0.011	0.200	-0.007	0.022
58	556.8023	88.6178	0.011	0.003	0.058	0.005
59	563.7591	89.7250	0.011	0.479	0.000	0.104
60	565.6142	90.0203	0.011	0.001	-0.176	0.001
61	588.5236	93.6664	0.011	0.102	-0.098	0.073
62	618.5141	98.4396	0.010	-1.200	0.001	0.107
63	620.6320	98.7766	0.010	0.083	-0.170	0.033
64	621.4155	98.9013	0.010	-0.422	0.049	-0.146

BY105A EXHAUSTOR PIPING FLUOR DANIEL NORTHWEST, INC.
04/09/97 TANK BY-105 TO BY-106 AutoPIPE+4.60 RESULT PAGE 7

D I S P L A C E M E N T S

Point name	Load combination	TRANSLATIONS (in) X	Y	Z	ROTATIONS (deg) X	Y	Z
*** Segment A begin ***							
A00	GR	0.000	0.000	0.000	0.000	0.000	0.000
	T1	0.000	0.000	0.000	0.000	0.000	0.000
	R1	0.000	0.000	0.000	0.000	0.000	0.000
	GR+T1	0.000	0.000	0.000	0.000	0.000	0.000
	TOTAL	0.000	0.000	0.000	0.000	0.000	0.000
A01	GR	0.000	0.000	0.000	0.000	0.000	0.000
	T1	0.000	0.000	0.004	0.000	0.000	0.000
	R1	0.000	0.000	0.000	0.000	0.000	0.000
	GR+T1	0.000	0.000	0.004	0.000	0.000	0.000
	TOTAL	0.000	0.000	0.004	0.000	0.000	0.000
A02	GR	0.001	-0.029	-0.022	-0.043	-0.001	-0.002
	T1	0.003	-0.019	-0.021	-0.027	-0.026	0.000
	R1	0.005	0.011	0.008	0.016	0.008	0.000
	GR+T1	0.004	-0.047	-0.043	-0.070	-0.027	-0.001
	TOTAL	0.009	0.059	0.051	0.086	0.035	0.002
A05	GR	0.001	-0.028	-0.022	-0.043	-0.001	-0.002
	T1	0.003	-0.018	-0.021	-0.027	-0.026	0.000
	R1	0.005	0.011	0.008	0.016	0.008	0.000
	GR+T1	0.003	-0.047	-0.042	-0.070	-0.027	-0.001
	TOTAL	0.009	0.058	0.051	0.086	0.035	0.002
A10	GR	0.001	-0.022	-0.022	-0.043	-0.001	-0.002
	T1	-0.001	-0.014	-0.014	-0.027	-0.026	0.000
	R1	0.004	0.008	0.008	0.016	0.008	0.000
	GR+T1	-0.001	-0.036	-0.036	-0.069	-0.027	-0.002
	TOTAL	0.005	0.044	0.044	0.086	0.035	0.002
*** Segment A end ***							
*** Segment B begin ***							
A10	GR	0.001	-0.022	-0.022	-0.043	-0.001	-0.002
	T1	-0.001	-0.014	-0.014	-0.027	-0.026	0.000
	R1	0.004	0.008	0.008	0.016	0.008	0.000
	GR+T1	-0.001	-0.036	-0.036	-0.069	-0.027	-0.002
	TOTAL	0.005	0.044	0.044	0.086	0.035	0.002
B05	GR	0.000	-0.014	-0.021	-0.042	-0.001	-0.001
	T1	0.002	-0.009	-0.001	-0.027	-0.027	0.001
	R1	0.003	0.005	0.009	0.016	0.008	0.001
	GR+T1	0.002	-0.023	-0.023	-0.069	-0.028	0.000
	TOTAL	0.005	0.028	0.032	0.085	0.036	0.001

BY105A EXHAUSTOR PIPING — FLUOR DANIEL NORTHWEST, INC.
04/09/97 TANK BY-105 TO BY-106 — AutoPIPE+4.60 RESULT PAGE 8

D I S P L A C E M E N T S

Point name	Load combination	TRANSLATIONS (in) X	Y	Z	ROTATIONS (deg) X	Y	Z
B10	GR	0.000	-0.010	-0.021	-0.041	-0.001	-0.001
	T1	0.003	-0.006	0.006	-0.026	-0.028	0.001
	R1	0.002	0.004	0.009	0.016	0.008	0.001
	GR+T1	0.004	-0.016	-0.016	-0.068	-0.029	0.000
	TOTAL	0.005	0.020	0.025	0.083	0.036	0.001
B15 N	GR	0.000	-0.010	-0.021	-0.041	-0.001	-0.001
	T1	0.003	-0.006	0.006	-0.026	-0.028	0.001
	R1	0.002	0.004	0.009	0.016	0.008	0.001
	GR+T1	0.004	-0.016	-0.016	-0.068	-0.029	0.000
	TOTAL	0.005	0.020	0.025	0.083	0.036	0.001
B15 F	GR	0.000	-0.006	-0.021	-0.029	-0.001	-0.004
	T1	0.001	-0.004	0.012	-0.018	-0.046	-0.001
	R1	0.001	0.002	0.009	0.011	0.005	0.001
	GR+T1	0.001	-0.010	-0.010	-0.046	-0.047	-0.005
	TOTAL	0.002	0.012	0.019	0.057	0.052	0.006
B20	GR	0.000	-0.005	-0.021	-0.028	-0.001	-0.004
	T1	0.000	-0.003	0.013	-0.017	-0.046	-0.001
	R1	0.001	0.002	0.009	0.010	0.005	0.001
	GR+T1	0.000	-0.009	-0.009	-0.046	-0.048	-0.005
	TOTAL	0.001	0.011	0.018	0.056	0.053	0.006
B25	GR	0.000	0.000	-0.021	-0.022	-0.001	-0.004
	T1	-0.010	0.000	0.022	-0.013	-0.051	-0.001
	R1	0.000	0.000	0.009	0.008	0.005	0.001
	GR+T1	-0.010	0.000	0.000	-0.035	-0.052	-0.005
	TOTAL	0.010	0.000	0.010	0.044	0.057	0.005
B30	GR	-0.002	0.000	-0.021	0.017	-0.001	-0.003
	T1	-0.118	0.000	0.100	0.006	-0.056	0.001
	R1	0.000	0.000	0.009	0.004	0.008	0.001
	GR+T1	-0.120	0.000	0.079	0.023	-0.057	-0.001
	TOTAL	0.120	0.000	0.088	0.027	0.066	0.002
B35	GR	-0.002	-0.004	-0.021	0.020	-0.001	-0.002
	T1	-0.129	-0.001	0.109	0.006	-0.052	0.002
	R1	0.002	0.001	0.009	0.004	0.011	0.001
	GR+T1	-0.132	-0.005	0.088	0.026	-0.053	-0.001
	TOTAL	0.134	0.006	0.097	0.030	0.064	0.002
B40 N	GR	-0.002	-0.005	-0.021	0.021	-0.001	-0.002
	T1	-0.131	-0.001	0.111	0.005	-0.052	0.002
	R1	0.002	0.001	0.009	0.004	0.011	0.001
	GR+T1	-0.134	-0.006	0.089	0.026	-0.053	-0.001
	TOTAL	0.136	0.007	0.099	0.031	0.064	0.002

BY105A EXHAUSTOR PIPING — FLUOR DANIEL NORTHWEST, INC.
04/09/97 TANK BY-105 TO BY-106 — AutoPIPE+4.60 RESULT PAGE 9

D I S P L A C E M E N T S

Point name	Load combination	TRANSLATIONS (in) X	Y	Z	ROTATIONS (deg) X	Y	Z
B40 F	GR	-0.002	-0.008	-0.021	0.027	-0.001	-0.004
	T1	-0.134	-0.002	0.117	0.004	-0.032	0.002
	R1	0.004	0.002	0.009	0.005	0.016	0.002
	GR+T1	-0.137	-0.010	0.096	0.031	-0.033	-0.002
	TOTAL	0.141	0.011	0.105	0.036	0.049	0.003
B50	GR	-0.003	-0.026	-0.021	0.027	-0.001	0.006
	T1	-0.120	-0.003	0.159	0.003	-0.010	0.003
	R1	0.015	0.005	0.009	0.006	0.015	0.002
	GR+T1	-0.123	-0.029	0.138	0.031	-0.011	0.009
	TOTAL	0.138	0.034	0.147	0.037	0.026	0.010
B55 N	GR	-0.004	-0.034	-0.020	0.024	-0.001	0.021
	T1	-0.090	-0.003	0.188	0.003	0.013	0.003
	R1	0.022	0.008	0.014	0.007	0.006	0.004
	GR+T1	-0.093	-0.037	0.168	0.027	0.012	0.023
	TOTAL	0.115	0.045	0.182	0.033	0.018	0.027
B55 F	GR	-0.004	-0.032	-0.020	0.021	-0.001	0.028
	T1	-0.084	-0.003	0.187	0.003	0.031	0.003
	R1	0.022	0.008	0.014	0.006	0.006	0.005
	GR+T1	-0.088	-0.035	0.167	0.024	0.030	0.030
	TOTAL	0.110	0.043	0.181	0.030	0.037	0.036
B60	GR	-0.004	-0.030	-0.020	0.021	-0.001	0.029
	T1	-0.080	-0.003	0.184	0.003	0.033	0.003
	R1	0.022	0.008	0.014	0.006	0.007	0.005
	GR+T1	-0.084	-0.033	0.164	0.024	0.032	0.031
	TOTAL	0.106	0.040	0.178	0.030	0.039	0.036
B65	GR	-0.004	0.000	-0.019	0.019	-0.001	0.007
	T1	-0.026	0.000	0.139	0.002	0.030	0.002
	R1	0.022	0.000	0.000	0.006	0.011	0.006
	GR+T1	-0.030	0.000	0.120	0.022	0.030	0.008
	TOTAL	0.052	0.000	0.120	0.028	0.041	0.015
B85	GR	-0.004	-0.021	-0.018	0.017	0.000	-0.003
	T1	0.063	0.001	0.117	0.002	-0.005	0.000
	R1	0.022	0.009	0.014	0.006	0.003	0.001
	GR+T1	0.060	-0.020	0.099	0.018	-0.005	-0.003
	TOTAL	0.082	0.029	0.113	0.025	0.009	0.004
B90	GR	-0.004	0.000	-0.017	0.014	0.000	0.005
	T1	0.153	0.000	0.142	0.001	-0.015	-0.001
	R1	0.022	0.000	0.000	0.007	0.015	0.006
	GR+T1	0.149	0.000	0.125	0.015	-0.015	0.004
	TOTAL	0.172	0.000	0.125	0.021	0.030	0.010

BY105A EXHAUSTOR PIPING — FLUOR DANIEL NORTHWEST, INC.
04/09/97 TANK BY-105 TO BY-106 — AutoPIPE+4.60 RESULT PAGE 10

D I S P L A C E M E N T S

Point name	Load combination	TRANSLATIONS (in) X	Y	Z	ROTATIONS (deg) X	Y	Z
B95	GR	-0.004	-0.010	-0.017	0.012	0.000	-0.010
	T1	0.213	-0.001	0.152	0.001	0.008	0.000
	R1	0.022	0.008	0.024	0.007	0.016	0.006
	GR+T1	0.209	-0.010	0.135	0.013	0.008	-0.011
	TOTAL	0.231	0.019	0.159	0.019	0.024	0.016
B100N	GR	-0.004	-0.010	-0.017	0.012	0.000	-0.010
	T1	0.213	-0.001	0.152	0.001	0.008	0.000
	R1	0.022	0.008	0.024	0.007	0.016	0.006
	GR+T1	0.209	-0.010	0.135	0.013	0.008	-0.011
	TOTAL	0.231	0.019	0.159	0.019	0.024	0.016
B100M	GR	-0.004	-0.010	-0.017	0.012	0.000	-0.009
	T1	0.216	-0.001	0.148	0.001	0.035	0.000
	R1	0.022	0.009	0.025	0.007	0.014	0.005
	GR+T1	0.213	-0.011	0.131	0.013	0.035	-0.009
	TOTAL	0.235	0.020	0.156	0.020	0.050	0.014
B100F	GR	-0.004	-0.009	-0.017	0.011	0.000	-0.008
	T1	0.213	-0.001	0.141	0.001	0.062	0.000
	R1	0.020	0.008	0.026	0.007	0.017	0.005
	GR+T1	0.209	-0.010	0.124	0.012	0.062	-0.009
	TOTAL	0.229	0.018	0.150	0.019	0.079	0.013
B105	GR	-0.004	0.000	-0.017	-0.001	0.000	-0.005
	T1	0.124	0.000	0.090	0.000	0.078	0.000
	R1	0.000	0.000	0.026	0.006	0.013	0.003
	GR+T1	0.120	0.000	0.072	-0.001	0.078	-0.005
	TOTAL	0.120	0.000	0.098	0.006	0.091	0.008
B107	GR	-0.004	-0.010	-0.017	0.000	0.000	0.000
	T1	-0.002	0.000	0.018	0.000	0.075	0.000
	R1	0.007	0.004	0.026	0.001	0.003	0.002
	GR+T1	-0.006	-0.010	0.001	0.000	0.075	0.000
	TOTAL	0.013	0.014	0.027	0.001	0.078	0.003
B110	GR	-0.005	0.000	-0.017	0.006	0.000	0.004
	T1	-0.115	0.000	-0.045	0.000	0.081	0.000
	R1	0.000	0.000	0.026	0.005	0.004	0.003
	GR+T1	-0.120	0.000	-0.062	0.006	0.081	0.004
	TOTAL	0.120	0.000	0.088	0.010	0.085	0.008
B120	GR	-0.005	-0.001	-0.017	-0.005	0.000	0.008
	T1	-0.209	0.000	-0.097	0.000	0.067	0.000
	R1	0.001	0.006	0.026	0.006	0.003	0.005
	GR+T1	-0.214	-0.001	-0.114	-0.005	0.067	0.008
	TOTAL	0.216	0.007	0.140	0.011	0.070	0.013

BY105A EXHAUSTOR PIPING — FLUOR DANIEL NORTHWEST, INC.
04/09/97 TANK BY-105 TO BY-106 — AutoPIPE+4.60 RESULT PAGE 11

D I S P L A C E M E N T S

Point name	Load combination	TRANSLATIONS (in) X	Y	Z	ROTATIONS (deg) X	Y	Z
B125N	GR	-0.005	-0.001	-0.017	-0.005	0.000	0.008
	T1	-0.209	0.000	-0.097	0.000	0.067	0.000
	R1	0.001	0.006	0.026	0.006	0.003	0.005
	GR+T1	-0.214	-0.001	-0.114	-0.005	0.067	0.008
	TOTAL	0.216	0.007	0.140	0.011	0.070	0.013
B125F	GR	-0.005	-0.001	-0.017	-0.013	0.000	0.006
	T1	-0.210	0.000	-0.109	0.000	0.013	0.000
	R1	0.000	0.006	0.024	0.006	0.021	0.006
	GR+T1	-0.215	-0.001	-0.126	-0.013	0.013	0.006
	TOTAL	0.215	0.008	0.149	0.019	0.034	0.011
B130	GR	-0.005	-0.001	-0.017	-0.013	0.000	0.006
	T1	-0.210	0.000	-0.109	0.000	0.013	0.000
	R1	0.000	0.006	0.023	0.006	0.021	0.006
	GR+T1	-0.215	-0.001	-0.126	-0.013	0.013	0.006
	TOTAL	0.215	0.008	0.149	0.019	0.034	0.011
B135	GR	-0.005	0.000	-0.017	-0.026	0.000	-0.010
	T1	-0.165	0.000	-0.108	0.000	-0.010	0.000
	R1	0.000	0.000	0.000	0.007	0.020	0.006
	GR+T1	-0.170	0.000	-0.125	-0.026	-0.010	-0.010
	TOTAL	0.170	0.000	0.125	0.033	0.030	0.016
B140	GR	-0.005	-0.032	-0.017	-0.052	0.000	0.000
	T1	-0.075	0.000	-0.073	0.000	-0.020	0.000
	R1	0.000	0.008	0.019	0.011	0.003	0.001
	GR+T1	-0.080	-0.032	-0.090	-0.052	-0.020	0.000
	TOTAL	0.081	0.040	0.109	0.063	0.023	0.001
B145	GR	-0.005	0.000	-0.017	-0.078	0.000	0.009
	T1	0.015	0.000	-0.037	-0.001	-0.012	0.000
	R1	0.000	0.000	0.000	0.016	0.010	0.005
	GR+T1	0.009	0.000	-0.053	-0.078	-0.012	0.009
	TOTAL	0.009	0.000	0.053	0.094	0.022	0.014
B150	GR	-0.005	-0.005	-0.016	-0.104	0.000	0.004
	T1	0.104	0.000	-0.027	-0.001	0.000	0.000
	R1	0.000	0.008	0.015	0.021	0.003	0.001
	GR+T1	0.099	-0.005	-0.043	-0.104	0.000	0.004
	TOTAL	0.099	0.013	0.058	0.125	0.003	0.005
B155	GR	-0.005	0.000	-0.015	-0.130	0.000	-0.024
	T1	0.194	0.000	-0.027	-0.001	-0.002	0.000
	R1	0.000	0.000	0.000	0.026	0.016	0.007
	GR+T1	0.189	0.000	-0.043	-0.130	-0.002	-0.025
	TOTAL	0.189	0.000	0.043	0.156	0.018	0.032

D I S P L A C E M E N T S

Point name	Load combination	TRANSLATIONS (in) X	Y	Z	ROTATIONS (deg) X	Y	Z
B160	GR	-0.005	-0.142	-0.014	-0.166	-0.001	-0.034
	T1	0.321	-0.001	0.022	-0.001	-0.040	0.000
	R1	0.000	0.028	0.039	0.032	0.003	0.008
	GR+T1	0.316	-0.143	0.008	-0.168	-0.041	-0.034
	TOTAL	0.316	0.171	0.047	0.200	0.044	0.042
B165N	GR	-0.005	-0.142	-0.014	-0.166	-0.001	-0.034
	T1	0.321	-0.001	0.022	-0.001	-0.040	0.000
	R1	0.000	0.028	0.039	0.032	0.003	0.008
	GR+T1	0.316	-0.143	0.008	-0.168	-0.041	-0.034
	TOTAL	0.316	0.171	0.047	0.200	0.044	0.042
B165M	GR	-0.005	-0.142	-0.014	-0.168	-0.001	-0.027
	T1	0.323	-0.001	0.025	-0.001	-0.049	0.000
	R1	0.000	0.028	0.039	0.033	0.008	0.007
	GR+T1	0.318	-0.143	0.011	-0.169	-0.050	-0.028
	TOTAL	0.318	0.171	0.050	0.202	0.058	0.034
B165F	GR	-0.005	-0.137	-0.014	-0.172	-0.001	-0.022
	T1	0.324	-0.001	0.029	-0.001	-0.058	0.000
	R1	0.001	0.027	0.038	0.034	0.015	0.005
	GR+T1	0.318	-0.138	0.016	-0.173	-0.059	-0.022
	TOTAL	0.319	0.165	0.054	0.207	0.073	0.027
B170	GR	-0.006	0.000	-0.013	-0.168	-0.001	-0.017
	T1	0.303	0.000	0.126	-0.001	-0.072	0.000
	R1	0.019	0.000	0.019	0.035	0.025	0.003
	GR+T1	0.297	0.000	0.113	-0.169	-0.072	-0.017
	TOTAL	0.316	0.000	0.132	0.204	0.097	0.020
B175	GR	-0.006	0.072	-0.013	-0.161	-0.001	-0.020
	T1	0.288	0.001	0.183	-0.001	-0.072	0.000
	R1	0.032	0.016	0.007	0.034	0.026	0.003
	GR+T1	0.282	0.072	0.170	-0.162	-0.072	-0.020
	TOTAL	0.314	0.089	0.177	0.196	0.098	0.022
B180	GR	-0.009	-0.028	-0.011	-0.063	-0.002	0.055
	T1	-0.010	0.031	-0.011	0.001	0.000	-0.002
	R1	0.004	0.004	0.004	0.010	0.008	0.010
	GR+T1	-0.020	0.002	-0.022	-0.062	-0.002	0.053
	TOTAL	0.024	0.006	0.026	0.071	0.010	0.063
B185	GR	-0.009	-0.011	-0.011	-0.063	-0.002	0.055
	T1	-0.004	0.030	-0.004	0.001	0.000	-0.002
	R1	0.003	0.002	0.003	0.010	0.008	0.010
	GR+T1	-0.013	0.019	-0.016	-0.062	-0.002	0.053
	TOTAL	0.017	0.021	0.019	0.071	0.010	0.063

D I S P L A C E M E N T S

Point name	Load combination	TRANSLATIONS (in) X	Y	Z	ROTATIONS (deg) X	Y	Z
B190N	GR	-0.009	-0.011	-0.011	-0.063	-0.002	0.055
	T1	-0.004	0.030	-0.004	0.001	0.000	-0.002
	R1	0.003	0.002	0.003	0.010	0.008	0.010
	GR+T1	-0.013	0.020	-0.016	-0.062	-0.002	0.053
	TOTAL	0.017	0.021	0.019	0.071	0.010	0.063
B190M	GR	-0.007	-0.002	-0.009	-0.045	-0.001	0.039
	T1	-0.001	0.028	-0.001	0.001	0.000	-0.002
	R1	0.003	0.000	0.002	0.008	0.006	0.008
	GR+T1	-0.008	0.026	-0.010	-0.044	-0.001	0.037
	TOTAL	0.011	0.026	0.012	0.052	0.007	0.046
B190F	GR	-0.004	0.000	-0.005	-0.019	0.000	0.016
	T1	0.000	0.023	0.000	0.001	0.000	-0.001
	R1	0.002	0.000	0.002	0.005	0.004	0.005
	GR+T1	-0.004	0.023	-0.005	-0.018	0.000	0.015
	TOTAL	0.006	0.023	0.006	0.023	0.004	0.020
B195	GR	-0.001	0.000	-0.001	-0.007	0.000	0.006
	T1	0.000	0.009	0.000	0.000	0.000	-0.001
	R1	0.000	0.000	0.000	0.003	0.002	0.003
	GR+T1	-0.001	0.009	-0.001	-0.007	0.000	0.006
	TOTAL	0.001	0.009	0.001	0.009	0.002	0.008
B200	GR	0.000	0.000	0.000	0.000	0.000	0.000
	T1	0.000	0.000	0.000	0.000	0.000	0.000
	R1	0.000	0.000	0.000	0.000	0.000	0.000
	GR+T1	0.000	0.000	0.000	0.000	0.000	0.000
	TOTAL	0.000	0.000	0.000	0.000	0.000	0.000

*** Segment B end ***

*** Segment C begin ***

A10	GR	0.001	-0.022	-0.022	-0.043	-0.001	-0.002
	T1	-0.001	-0.014	-0.014	-0.027	-0.026	0.000
	R1	0.004	0.008	0.008	0.016	0.008	0.000
	GR+T1	-0.001	-0.036	-0.036	-0.069	-0.027	-0.002
	TOTAL	0.005	0.044	0.044	0.086	0.035	0.002
C05	GR	0.000	-0.013	-0.022	-0.042	-0.001	-0.003
	T1	-0.014	-0.009	-0.011	-0.027	-0.026	0.000
	R1	0.003	0.005	0.008	0.016	0.008	0.000
	GR+T1	-0.014	-0.023	-0.033	-0.068	-0.027	-0.003
	TOTAL	0.016	0.028	0.041	0.085	0.035	0.003

D I S P L A C E M E N T S

Point name	Load combination	TRANSLATIONS (in) X	Y	Z	ROTATIONS (deg) X	Y	Z
C10	GR	0.000	-0.009	-0.022	-0.041	-0.001	-0.003
	T1	-0.021	-0.006	-0.009	-0.026	-0.025	0.000
	R1	0.002	0.004	0.008	0.016	0.008	0.000
	GR+T1	-0.020	-0.015	-0.031	-0.067	-0.026	-0.003
	TOTAL	0.022	0.019	0.040	0.083	0.034	0.004
C15 N	GR	0.000	-0.009	-0.022	-0.041	-0.001	-0.003
	T1	-0.021	-0.006	-0.009	-0.026	-0.025	0.000
	R1	0.002	0.004	0.008	0.016	0.008	0.000
	GR+T1	-0.020	-0.015	-0.031	-0.067	-0.026	-0.003
	TOTAL	0.022	0.019	0.040	0.083	0.034	0.004
C15 F	GR	0.000	-0.005	-0.022	-0.026	-0.001	0.001
	T1	-0.025	-0.004	-0.005	-0.018	-0.017	0.002
	R1	0.001	0.002	0.008	0.011	0.005	0.001
	GR+T1	-0.025	-0.009	-0.027	-0.044	-0.018	0.002
	TOTAL	0.026	0.011	0.036	0.055	0.023	0.004
C20	GR	0.000	-0.005	-0.022	-0.025	-0.001	0.000
	T1	-0.025	-0.003	-0.004	-0.018	-0.016	0.002
	R1	0.001	0.002	0.008	0.011	0.005	0.001
	GR+T1	-0.025	-0.008	-0.026	-0.043	-0.017	0.002
	TOTAL	0.026	0.010	0.035	0.053	0.022	0.004
C25	GR	0.000	0.000	-0.022	-0.018	-0.001	0.000
	T1	-0.029	0.000	0.005	-0.014	-0.014	0.002
	R1	0.000	0.000	0.008	0.008	0.004	0.001
	GR+T1	-0.029	0.000	-0.018	-0.032	-0.016	0.002
	TOTAL	0.029	0.000	0.026	0.040	0.019	0.003
C30	GR	-0.003	0.000	-0.022	0.006	-0.002	-0.008
	T1	-0.041	0.000	0.083	0.006	0.001	0.004
	R1	0.000	0.000	0.009	0.004	0.002	0.003
	GR+T1	-0.044	0.000	0.061	0.012	0.000	-0.003
	TOTAL	0.044	0.000	0.069	0.016	0.002	0.006
C35	GR	-0.003	-0.001	-0.022	0.006	-0.002	-0.008
	T1	-0.041	-0.001	0.087	0.006	0.002	0.004
	R1	0.000	0.000	0.009	0.004	0.002	0.003
	GR+T1	-0.044	-0.001	0.065	0.012	0.001	-0.003
	TOTAL	0.044	0.002	0.074	0.016	0.002	0.007
C40 N	GR	-0.003	-0.001	-0.022	0.006	-0.002	-0.008
	T1	-0.041	-0.001	0.087	0.006	0.002	0.004
	R1	0.000	0.000	0.009	0.004	0.002	0.003
	GR+T1	-0.044	-0.001	0.065	0.012	0.001	-0.003
	TOTAL	0.044	0.002	0.074	0.016	0.002	0.007

D I S P L A C E M E N T S

Point name	Load combination	TRANSLATIONS (in) X	Y	Z	ROTATIONS (deg) X	Y	Z
C40 F	GR	-0.003	-0.002	-0.022	0.005	-0.002	-0.008
	T1	-0.038	-0.001	0.091	0.004	0.011	0.005
	R1	0.000	0.001	0.009	0.003	0.002	0.004
	GR+T1	-0.041	-0.003	0.070	0.009	0.009	-0.003
	TOTAL	0.042	0.003	0.078	0.012	0.011	0.007
C45	GR	-0.003	-0.002	-0.022	0.005	-0.002	-0.008
	T1	-0.038	-0.001	0.091	0.004	0.011	0.005
	R1	0.000	0.001	0.009	0.003	0.002	0.004
	GR+T1	-0.041	-0.003	0.070	0.009	0.009	-0.003
	TOTAL	0.042	0.003	0.078	0.012	0.011	0.007
C50	GR	-0.004	-0.007	-0.021	-0.001	-0.002	-0.007
	T1	-0.010	0.000	0.106	0.003	0.016	0.005
	R1	0.001	0.001	0.009	0.002	0.001	0.004
	GR+T1	-0.014	-0.007	0.085	0.002	0.014	-0.002
	TOTAL	0.015	0.008	0.095	0.005	0.015	0.006
C55	GR	-0.005	-0.008	-0.020	-0.008	-0.002	-0.006
	T1	0.020	0.001	0.120	0.003	0.017	0.005
	R1	0.001	0.002	0.010	0.002	0.000	0.004
	GR+T1	0.016	-0.007	0.100	-0.006	0.015	0.000
	TOTAL	0.017	0.008	0.109	0.008	0.015	0.004
C60 N	GR	-0.005	-0.008	-0.020	-0.008	-0.002	-0.006
	T1	0.020	0.001	0.120	0.003	0.017	0.005
	R1	0.001	0.002	0.010	0.002	0.000	0.004
	GR+T1	0.016	-0.007	0.100	-0.006	0.015	0.000
	TOTAL	0.017	0.008	0.109	0.008	0.015	0.004
C60 F	GR	-0.005	-0.007	-0.020	-0.012	-0.002	-0.004
	T1	0.024	0.001	0.124	0.002	0.016	0.006
	R1	0.001	0.001	0.010	0.003	0.002	0.004
	GR+T1	0.019	-0.006	0.104	-0.010	0.014	0.001
	TOTAL	0.021	0.007	0.113	0.013	0.016	0.005
C65	GR	-0.005	-0.007	-0.020	-0.012	-0.002	-0.004
	T1	0.024	0.001	0.124	0.002	0.016	0.006
	R1	0.001	0.001	0.010	0.003	0.002	0.004
	GR+T1	0.019	-0.006	0.104	-0.010	0.014	0.001
	TOTAL	0.021	0.007	0.113	0.013	0.016	0.005
C67	GR	-0.006	0.000	-0.020	-0.012	-0.002	-0.004
	T1	0.032	0.000	0.147	0.002	0.015	0.005
	R1	0.000	0.000	0.010	0.003	0.003	0.004
	GR+T1	0.027	0.000	0.127	-0.009	0.013	0.001
	TOTAL	0.027	0.000	0.137	0.012	0.016	0.005

BY105A EXHAUSTOR PIPING FLUOR DANIEL NORTHWEST, INC.
04/09/97 TANK BY-105 TO BY-106 AutoPIPE+4.60 RESULT PAGE 16

D I S P L A C E M E N T S

Point name	Load combination	TRANSLATIONS (in) X	Y	Z	ROTATIONS (deg) X	Y	Z
C70	GR	-0.007	0.004	-0.020	-0.010	-0.002	-0.004
	T1	0.039	-0.001	0.165	0.002	0.015	0.005
	R1	0.001	0.001	0.010	0.003	0.003	0.004
	GR+T1	0.032	0.003	0.145	-0.008	0.013	0.001
	TOTAL	0.033	0.005	0.155	0.010	0.016	0.005
C75	GR	0.000	0.000	0.000	-0.001	0.000	0.000
	T1	0.000	0.000	-0.013	0.000	0.000	0.000
	R1	0.000	0.000	0.000	0.000	0.000	0.000
	GR+T1	0.000	0.000	-0.013	-0.001	0.000	0.000
	TOTAL	0.000	0.000	0.013	0.001	0.000	0.000
C80	GR	0.000	0.000	0.000	0.000	0.000	0.000
	T1	0.000	0.000	0.000	0.000	0.000	0.000
	R1	0.000	0.000	0.000	0.000	0.000	0.000
	GR+T1	0.000	0.000	0.000	0.000	0.000	0.000
	TOTAL	0.000	0.000	0.000	0.000	0.000	0.000

*** Segment C end ***

BY105A EXHAUSTOR PIPING FLUOR DANIEL NORTHWEST, INC.
04/09/97 TANK BY-105 TO BY-106 AutoPIPE+4.60 RESULT PAGE 17

R E S T R A I N T R E A C T I O N S

Point name	Load combination	FORCES (lb) X	Y	Z	Result	MOMENTS (ft-lb) X	Y	Z	Result
A00	Anchor								
	GR	0	-386	-2	386	181	0	-8	181
	T1	1	-4	-2	4	3	1	1	4
	R1	25	19	28	42	9	9	2	12
	GR+T1	1	-389	-4	389	184	1	-7	184
	TOTAL	26	408	32	410	193	10	9	193
A10	Inclined								
	GR	0	-4	4	5	0	0	0	0
	T1	0	315	-315	445	0	0	0	0
	R1	0	158	158	223	0	0	0	0
	GR+T1	0	311	-311	440	0	0	0	0
	TOTAL	0	469	469	663	0	0	0	0
B25	Guide								
	GR	0	-412	0	412	0	0	0	0
	T1	-28	-200	59	210	0	0	0	0
	R1	82	118	0	144	0	0	0	0
	GR+T1	-28	-612	59	616	0	0	0	0
	TOTAL	110	730	59	741	0	0	0	0
B30	Guide								
	GR	0	-251	0	251	0	0	0	0
	T1	-56	59	42	91	0	0	0	0
	R1	147	46	0	154	0	0	0	0
	GR+T1	-56	-192	42	204	0	0	0	0
	TOTAL	203	238	42	316	0	0	0	0
B65	Guide								
	GR	0	-500	0	500	0	0	0	0
	T1	-50	-5	162	170	0	0	0	0
	R1	0	38	88	96	0	0	0	0
	GR+T1	-50	-504	162	532	0	0	0	0
	TOTAL	50	542	251	599	0	0	0	0
B90	Guide								
	GR	0	-393	0	393	0	0	0	0
	T1	57	2	72	92	0	0	0	0
	R1	0	34	89	96	0	0	0	0
	GR+T1	57	-392	72	402	0	0	0	0
	TOTAL	57	425	161	458	0	0	0	0
B105	Guide								
	GR	0	-335	0	335	0	0	0	0
	T1	145	-1	37	150	0	0	0	0
	R1	102	29	0	106	0	0	0	0
	GR+T1	145	-336	37	368	0	0	0	0
	TOTAL	248	365	37	442	0	0	0	0

R E S T R A I N T R E A C T I O N S

Point name	Load combination	FORCES (lb) X	Y	Z	Result	MOMENTS (ft-lb) X	Y	Z	Result
B110	Guide								
	GR	0	-259	0	259	0	0	0	0
	T1	-153	1	-38	158	0	0	0	0
	R1	81	32	0	87	0	0	0	0
	GR+T1	-153	-258	-38	302	0	0	0	0
	TOTAL	234	290	38	374	0	0	0	0
B135	Guide								
	GR	0	-425	0	425	0	0	0	0
	T1	-92	-1	-76	120	0	0	0	0
	R1	0	25	115	117	0	0	0	0
	GR+T1	-92	-426	-76	442	0	0	0	0
	TOTAL	92	451	190	498	0	0	0	0
B145	Guide								
	GR	0	-444	0	444	0	0	0	0
	T1	12	0	-31	34	0	0	0	0
	R1	0	29	82	87	0	0	0	0
	GR+T1	12	-443	-31	445	0	0	0	0
	TOTAL	12	473	113	486	0	0	0	0
B145	Line Stp								
	GR	0	0	0	0	0	0	0	0
	T1	0	0	0	0	0	0	0	0
	R1	150	0	0	150	0	0	0	0
	GR+T1	0	0	0	0	0	0	0	0
	TOTAL	150	0	0	150	0	0	0	0
B155	Guide								
	GR	0	-518	0	518	0	0	0	0
	T1	90	-1	-13	91	0	0	0	0
	R1	0	31	67	74	0	0	0	0
	GR+T1	90	-518	-13	526	0	0	0	0
	TOTAL	90	549	80	563	0	0	0	0
B170	Guide								
	GR	0	-359	0	359	0	0	0	0
	T1	104	2	8	104	0	0	0	0
	R1	34	15	34	51	0	0	0	0
	GR+T1	104	-358	8	373	0	0	0	0
	TOTAL	138	373	42	400	0	0	0	0
B200	Anchor								
	GR	0	-835	0	835	-706	0	600	927
	T1	22	-1	18	28	57	-6	-70	91
	R1	87	72	84	141	286	113	297	427
	GR+T1	22	-836	18	837	-649	-6	530	838
	TOTAL	108	908	102	920	935	119	827	1254

R E S T R A I N T R E A C T I O N S

Point name	Load combination	FORCES (lb) X	Y	Z	Result	MOMENTS (ft-lb) X	Y	Z	Result
C25	Guide								
	GR	0	-435	0	435	0	0	0	0
	T1	-59	-225	9	233	0	0	0	0
	R1	72	132	0	150	0	0	0	0
	GR+T1	-59	-660	9	663	0	0	0	0
	TOTAL	131	792	9	803	0	0	0	0
C30	Guide								
	GR	0	-145	0	145	0	0	0	0
	T1	-5	62	11	63	0	0	0	0
	R1	39	42	0	57	0	0	0	0
	GR+T1	-5	-82	11	83	0	0	0	0
	TOTAL	44	124	11	132	0	0	0	0
C67	Guide								
	GR	0	-240	0	240	0	0	0	0
	T1	10	-4	44	45	0	0	0	0
	R1	21	11	0	23	0	0	0	0
	GR+T1	10	-244	44	248	0	0	0	0
	TOTAL	31	255	44	260	0	0	0	0
C80	Anchor								
	GR	0	-94	-2	94	-125	1	-3	125
	T1	2	0	14	14	0	-3	3	5
	R1	5	3	6	9	3	6	2	7
	GR+T1	1	-94	13	95	-125	-3	1	125
	TOTAL	7	98	19	100	128	8	3	128

G L O B A L F O R C E S & M O M E N T S

Point name	Load combination	FORCES (lb) X	Y	Z	Result	MOMENTS (ft-lb) X	Y	Z	Result
*** Segment A begin ***									
A00	GR	0	306	2	306	-181	0	8	181
	T1	-1	4	2	4	-3	-1	-1	4
	R1	16	14	20	29	9	9	2	12
	GR+T1	-1	309	4	309	-184	-1	7	184
	TOTAL	17	323	25	324	193	10	9	193
A01 -	GR	0	291	2	291	-31	0	8	32
	T1	-1	4	2	4	-2	0	-1	2
	R1	15	13	20	28	3	2	2	4
	GR+T1	-1	295	4	295	-33	0	7	34
	TOTAL	16	308	24	309	35	2	9	37
A01 +	GR	0	74	2	74	-31	0	8	32
	T1	-1	4	2	4	-2	0	-1	2
	R1	8	10	16	20	3	2	2	4
	GR+T1	-1	78	4	78	-33	0	7	34
	TOTAL	9	88	20	91	35	2	9	37
A02 -	GR	0	-200	2	200	-26	0	8	27
	T1	-1	4	2	4	2	1	-1	2
	R1	8	9	16	20	2	2	2	3
	GR+T1	-1	-196	4	197	-24	1	7	25
	TOTAL	9	205	20	207	26	2	9	28
A02 +	GR	0	-280	2	280	-26	0	8	27
	T1	-1	4	2	4	2	1	-1	2
	R1	15	23	18	32	2	2	2	3
	GR+T1	-1	-276	4	276	-24	1	7	25
	TOTAL	16	299	22	300	26	2	9	28
A05	GR	0	-281	2	281	-40	0	8	41
	T1	-1	4	2	4	2	1	-1	2
	R1	16	23	18	33	2	2	2	4
	GR+T1	-1	-278	4	278	-38	1	7	39
	TOTAL	17	301	22	303	41	3	9	42
A10	GR	0	-303	2	303	-259	0	8	260
	T1	-1	4	2	4	5	1	-1	5
	R1	17	26	19	36	20	14	2	25
	GR+T1	-1	-300	4	300	-255	1	7	255
	TOTAL	18	326	23	327	275	15	9	276

*** Segment A end ***

*** Segment B begin ***

G L O B A L F O R C E S & M O M E N T S

Point name	Load combination	FORCES (lb) X	Y	Z	Result	MOMENTS (ft-lb) X	Y	Z	Result
A10	GR	0	-163	0	163	-62	1	-316	322
	T1	52	-144	239	284	-24	185	-244	307
	R1	44	80	88	127	27	67	139	157
	GR+T1	52	-308	239	393	-86	186	-560	596
	TOTAL	96	388	326	516	113	253	699	752
B05	GR	0	-200	0	200	-221	1	-158	272
	T1	52	-144	239	284	-150	349	-117	397
	R1	44	83	84	126	95	57	68	130
	GR+T1	52	-344	239	422	-371	349	-275	579
	TOTAL	96	427	323	544	466	406	343	707
B10	GR	0	-218	0	218	-319	1	-59	325
	T1	52	-144	239	284	-218	436	-50	490
	R1	45	84	83	126	134	67	29	152
	GR+T1	52	-363	239	437	-537	437	-109	701
	TOTAL	97	446	321	558	671	504	138	850
B15 N	GR	0	-218	0	218	-319	1	-59	325
	T1	52	-144	239	284	-218	436	-50	490
	R1	45	84	83	126	134	67	29	152
	GR+T1	52	-363	239	437	-537	437	-109	701
	TOTAL	97	446	321	558	671	504	138	850
B15 F	GR	0	-231	0	231	-439	1	-10	439
	T1	52	-144	239	284	-295	461	-18	548
	R1	45	84	81	125	178	68	11	191
	GR+T1	52	-376	239	448	-733	462	-28	867
	TOTAL	97	460	320	568	911	530	39	1055
B20 -	GR	0	-234	0	234	-464	0	-10	464
	T1	52	-144	239	284	-310	456	-18	552
	R1	45	84	81	125	187	67	11	199
	GR+T1	52	-378	239	450	-774	456	-28	899
	TOTAL	97	462	320	570	962	523	39	1096
B20 +	GR	0	-258	0	258	-464	0	-10	464
	T1	52	-144	239	284	-310	456	-18	552
	R1	46	85	78	124	187	67	11	199
	GR+T1	52	-402	239	470	-774	456	-28	899
	TOTAL	98	487	317	589	962	523	39	1096
B25 -	GR	0	-280	0	280	-733	0	-10	733
	T1	52	-144	239	284	-455	404	-18	608
	R1	47	85	77	124	272	73	11	282
	GR+T1	52	-424	239	489	-1187	404	-28	1255
	TOTAL	99	509	315	607	1459	477	39	1536

G L O B A L F O R C E S & M O M E N T S

Point name	Load combination	FORCES (lb) X	Y	Z	Result	MOMENTS (ft-lb) X	Y	Z	Result
B25 +	GR	0	133	0	133	-733	0	-10	733
	T1	79	56	180	204	-455	404	-18	608
	R1	35	34	73	88	272	73	11	282
	GR+T1	80	188	180	272	-1187	404	-28	1255
	TOTAL	115	222	253	356	1459	477	39	1536
B30 -	GR	0	-60	0	60	-415	-1	-10	415
	T1	79	56	180	204	31	-290	-18	292
	R1	33	37	60	78	77	277	11	287
	GR+T1	80	-4	180	197	-384	-291	-28	483
	TOTAL	113	41	240	268	461	567	39	732
B30 +	GR	0	191	0	191	-415	-1	-10	415
	T1	135	-3	138	194	31	-290	-18	292
	R1	115	17	57	130	77	277	11	287
	GR+T1	135	187	138	269	-384	-291	-28	483
	TOTAL	251	205	195	378	461	567	39	732
B35 -	GR	0	169	0	169	-237	-1	-10	237
	T1	135	-3	138	194	28	-424	-18	425
	R1	115	17	56	129	62	164	11	176
	GR+T1	135	166	138	255	-209	-425	-28	475
	TOTAL	251	182	194	366	272	589	39	650
B35 +	GR	0	145	0	145	-237	-1	-10	237
	T1	135	-3	138	194	28	-424	-18	425
	R1	114	16	53	127	62	164	11	176
	GR+T1	135	142	138	240	-209	-425	-28	475
	TOTAL	250	157	192	352	272	589	39	650
B40 N	GR	0	141	0	141	-210	-1	-10	210
	T1	135	-3	138	194	27	-450	-18	451
	R1	114	16	53	127	60	143	11	155
	GR+T1	135	137	138	237	-183	-451	-28	487
	TOTAL	250	153	191	350	243	593	39	642
B40 F	GR	0	128	0	128	-139	-1	-39	144
	T1	135	-3	138	194	25	-491	-17	492
	R1	113	15	51	125	53	94	10	108
	GR+T1	135	124	138	230	-113	-492	-57	508
	TOTAL	249	139	189	342	166	586	67	613
B50	GR	0	31	0	31	107	-2	-285	305
	T1	135	-3	138	194	16	-482	-7	482
	R1	104	8	50	116	24	115	42	125
	GR+T1	135	27	138	196	123	-483	-293	578
	TOTAL	240	36	188	307	146	598	335	701

G L O B A L F O R C E S & M O M E N T S

Point name	Load combination	FORCES (lb) X	Y	Z	Result	MOMENTS (ft-lb) X	Y	Z	Result
B55 N	GR	0	-72	0	72	39	-2	-217	220
	T1	135	-3	138	194	5	-472	3	472
	R1	90	8	57	107	10	272	53	277
	GR+T1	135	-75	138	208	44	-474	-214	521
	TOTAL	225	84	195	310	54	746	267	794
B55 F	GR	0	-85	0	85	22	-2	-175	176
	T1	135	-3	138	194	4	-428	5	428
	R1	87	10	58	105	9	263	52	268
	GR+T1	135	-88	138	213	26	-430	-170	463
	TOTAL	223	98	197	313	35	693	222	728
B60 -	GR	0	-94	0	94	22	-2	-138	140
	T1	135	-3	138	194	4	-371	6	371
	R1	86	10	59	105	9	240	50	246
	GR+T1	135	-97	138	217	26	-373	-132	397
	TOTAL	222	108	197	316	35	614	182	641
B60 +	GR	0	-118	0	118	22	-2	-138	140
	T1	135	-3	138	194	4	-371	6	371
	R1	78	16	64	102	9	240	50	246
	GR+T1	135	-121	138	229	26	-373	-132	397
	TOTAL	213	138	202	324	35	614	182	641
B65 -	GR	0	-251	0	251	22	-2	969	969
	T1	135	-3	138	194	4	459	25	459
	R1	62	21	69	95	9	193	90	213
	GR+T1	135	-254	138	319	26	456	994	1094
	TOTAL	197	275	207	397	35	650	1084	1264
B65 +	GR	0	249	0	249	22	-2	969	969
	T1	185	1	-24	187	4	459	25	459
	R1	51	23	33	65	9	193	90	213
	GR+T1	186	250	-24	313	26	456	994	1094
	TOTAL	237	274	57	366	35	650	1084	1264
B85 -	GR	0	28	0	28	22	-2	-417	417
	T1	185	1	-24	187	4	218	10	219
	R1	26	10	23	37	9	161	112	197
	GR+T1	186	30	-24	189	26	216	-406	461
	TOTAL	212	40	47	221	35	377	518	642
B85 +	GR	0	4	0	4	22	-2	-417	417
	T1	185	1	-24	187	4	218	10	219
	R1	17	9	22	29	9	161	112	197
	GR+T1	186	6	-24	187	26	216	-406	461
	TOTAL	202	15	46	208	35	377	518	642

BY105A EXHAUSTOR PIPING
04/09/97 TANK BY-105 TO BY-106

FLUOR DANIEL NORTHWEST, INC.
AutoPIPE+4.60 RESULT PAGE 24

G L O B A L F O R C E S & M O M E N T S

Point name	Load combination	FORCES (lb) X	Y	Z	Result	MOMENTS (ft-lb) X	Y	Z	Result
B90 -	GR	0	-216	0	216	22	-2	643	643
	T1	185	1	-24	187	4	-21	-4	22
	R1	30	23	30	48	9	231	78	244
	GR+T1	186	-215	-24	285	26	-24	639	640
	TOTAL	215	237	54	325	35	255	717	761
B90 +	GR	0	177	0	177	22	-2	643	643
	T1	128	0	-96	160	4	-21	-4	22
	R1	40	16	68	81	9	231	78	244
	GR+T1	128	177	-96	239	26	-24	639	640
	TOTAL	168	193	164	304	35	255	717	761
B95 -	GR	0	31	0	31	22	-2	-48	53
	T1	128	0	-96	160	4	-657	-2	657
	R1	57	11	61	84	9	219	25	220
	GR+T1	128	30	-96	163	26	-660	-50	662
	TOTAL	186	41	156	246	35	878	75	882
B95 +	GR	0	7	0	7	22	-2	-48	53
	T1	128	0	-96	160	4	-657	-2	657
	R1	66	9	54	85	9	219	25	220
	GR+T1	128	6	-96	160	26	-660	-50	662
	TOTAL	194	15	149	246	35	878	75	882
B100N	GR	0	6	0	6	22	-2	-48	53
	T1	128	0	-96	160	4	-658	-2	658
	R1	66	9	53	85	9	219	25	221
	GR+T1	128	6	-96	160	26	-660	-50	662
	TOTAL	195	15	149	246	35	879	75	883
B100M	GR	0	-6	0	6	22	-2	-48	53
	T1	128	0	-96	160	5	-680	-1	680
	R1	69	9	51	86	9	232	24	233
	GR+T1	128	-7	-96	160	27	-682	-50	685
	TOTAL	197	16	147	246	36	914	73	918
B100F	GR	0	-19	0	19	29	-2	-46	54
	T1	128	0	-96	160	5	-633	-1	633
	R1	74	12	47	89	10	210	23	211
	GR+T1	128	-20	-96	161	34	-635	-47	638
	TOTAL	203	32	142	250	44	845	70	849
B105 -	GR	0	-146	0	146	506	-1	-46	508
	T1	128	0	-96	160	7	105	-1	105
	R1	81	17	37	91	86	282	23	295
	GR+T1	128	-147	-96	217	513	103	-47	525
	TOTAL	210	163	132	297	598	385	70	715

BY105A.OUT 4-9-97 10:48a

BY105A EXHAUSTOR PIPING
04/09/97 TANK BY-105 TO BY-106

FLUOR DANIEL NORTHWEST, INC.
AutoPIPE+4.60 RESULT PAGE 25

G L O B A L F O R C E S & M O M E N T S

Point name	Load combination	FORCES (lb) X	Y	Z	Result	MOMENTS (ft-lb) X	Y	Z	Result
B105 +	GR	0	188	0	188	506	-1	-46	508
	T1	-17	1	-133	134	7	105	-1	105
	R1	28	18	32	46	86	282	23	295
	GR+T1	-17	189	-133	232	513	103	-47	525
	TOTAL	44	207	165	269	598	385	70	715
B107 -	GR	0	12	0	12	-297	0	-46	300
	T1	-17	1	-133	134	2	-30	-1	30
	R1	27	8	33	43	89	116	23	147
	GR+T1	-17	13	-133	134	-294	-31	-47	300
	TOTAL	43	21	165	172	383	146	70	416
B107 +	GR	0	-12	0	12	-297	0	-46	300
	T1	-17	1	-133	134	2	-30	-1	30
	R1	31	13	40	52	89	116	23	147
	GR+T1	-17	-11	-133	134	-294	-31	-47	300
	TOTAL	48	24	173	181	383	146	70	416
B110 -	GR	0	-166	0	166	327	1	-46	330
	T1	-17	1	-133	134	-2	-149	-1	149
	R1	38	21	54	70	73	138	23	158
	GR+T1	-17	-166	-133	213	325	-148	-47	361
	TOTAL	55	187	187	270	398	286	70	495
B110 +	GR	0	93	0	93	327	1	-46	330
	T1	136	0	-94	166	-2	-149	-1	149
	R1	53	15	62	83	73	138	23	158
	GR+T1	136	92	-94	190	325	-148	-47	361
	TOTAL	189	107	156	267	398	286	70	495
B120	GR	0	-34	0	34	160	1	-46	166
	T1	136	0	-94	166	1	634	-1	634
	R1	52	10	79	95	33	223	23	226
	GR+T1	136	-35	-94	169	161	635	-47	657
	TOTAL	189	45	173	260	194	858	70	883
B125N	GR	0	-34	0	34	160	1	-46	166
	T1	136	0	-94	166	1	634	-1	634
	R1	52	10	80	96	33	223	23	227
	GR+T1	136	-35	-94	169	161	636	-47	657
	TOTAL	189	45	174	260	194	858	70	883
B125F	GR	0	-60	0	60	192	2	-8	193
	T1	136	0	-94	166	1	665	-1	665
	R1	53	9	83	99	37	200	22	205
	GR+T1	136	-61	-94	176	194	667	-9	695
	TOTAL	189	70	177	268	231	867	31	898

BY105A EXHAUSTOR PIPING FLUOR DANIEL NORTHWEST, INC.
04/09/97 TANK BY-105 TO BY-106 AutoPIPE+4.60 RESULT PAGE 26

G L O B A L F O R C E S & M O M E N T S

Point name	Load combination	FORCES (lb) X	Y	Z	Result	MOMENTS (ft-lb) X	Y	Z	Result
B130 -	GR	0	-60	0	60	192	2	-8	193
	T1	136	0	-94	166	1	665	-1	665
	R1	53	9	83	99	37	200	22	205
	GR+T1	136	-61	-94	176	194	667	-9	694
	TOTAL	189	70	177	268	231	867	31	898
B130 +	GR	0	-84	0	84	192	2	-8	193
	T1	136	0	-94	166	1	665	-1	665
	R1	54	11	90	105	37	200	22	205
	GR+T1	136	-85	-94	186	194	667	-9	694
	TOTAL	190	96	184	281	231	867	31	898
B135 -	GR	0	-195	0	195	192	1	689	716
	T1	136	0	-94	166	1	194	1	194
	R1	57	15	95	111	37	280	55	288
	GR+T1	136	-195	-94	256	194	195	691	743
	TOTAL	193	210	189	342	231	476	745	914
B135 +	GR	0	231	0	231	192	1	689	716
	T1	229	0	-18	229	1	194	1	194
	R1	59	17	40	74	37	280	55	288
	GR+T1	229	231	-18	325	194	195	691	743
	TOTAL	288	248	58	385	231	476	745	914
B140 -	GR	0	10	0	10	192	1	-516	550
	T1	229	0	-18	229	1	9	0	10
	R1	69	8	21	73	37	225	99	249
	GR+T1	229	10	-18	230	194	11	-516	551
	TOTAL	298	18	39	301	231	236	614	697
B140 +	GR	0	-14	0	14	192	1	-516	550
	T1	229	0	-18	229	1	9	0	10
	R1	78	9	28	83	37	225	99	249
	GR+T1	229	-14	-18	230	194	11	-516	551
	TOTAL	306	23	47	311	231	236	614	697
B145 -	GR	0	-234	0	234	192	1	725	750
	T1	229	0	-18	229	1	-175	-1	175
	R1	91	20	50	106	37	205	71	220
	GR+T1	229	-234	-18	328	194	-174	723	769
	TOTAL	320	254	69	415	231	379	794	910
B145 +	GR	0	210	0	210	192	1	725	750
	T1	216	0	13	217	1	-175	-1	175
	R1	90	17	40	100	37	205	71	220
	GR+T1	216	209	13	301	194	-174	723	769
	TOTAL	306	226	53	385	231	379	794	910

BY105A EXHAUSTOR PIPING FLUOR DANIEL NORTHWEST, INC.
04/09/97 TANK BY-105 TO BY-106 AutoPIPE+4.60 RESULT PAGE 27

G L O B A L F O R C E S & M O M E N T S

Point name	Load combination	FORCES (lb) X	Y	Z	Result	MOMENTS (ft-lb) X	Y	Z	Result
B150 -	GR	0	-11	0	11	192	1	-268	330
	T1	216	0	13	217	1	-47	1	47
	R1	85	10	26	89	37	180	89	204
	GR+T1	216	-11	13	217	194	-46	-267	333
	TOTAL	301	21	39	304	231	226	357	481
B150 +	GR	0	-35	0	35	192	1	-268	330
	T1	216	0	13	217	1	-47	1	47
	R1	81	11	17	83	37	180	89	204
	GR+T1	216	-35	13	220	194	-46	-267	333
	TOTAL	297	46	30	302	231	226	357	481
B155 -	GR	0	-255	0	255	192	1	1184	1200
	T1	216	0	13	217	1	81	3	81
	R1	74	17	31	82	37	212	117	245
	GR+T1	216	-256	13	335	194	82	1187	1206
	TOTAL	290	273	44	401	231	294	1304	1357
B155 +	GR	0	262	0	262	192	1	1184	1200
	T1	126	0	26	128	1	81	3	81
	R1	70	18	53	89	37	212	117	245
	GR+T1	126	263	26	292	194	82	1187	1206
	TOTAL	196	281	78	351	231	294	1304	1357
B160	GR	0	-51	0	51	192	1	-315	370
	T1	126	0	26	128	1	443	-2	443
	R1	59	5	11	60	37	321	59	328
	GR+T1	126	-51	26	138	194	444	-317	579
	TOTAL	185	56	36	197	231	765	376	883
B165N	GR	0	-51	0	51	192	1	-315	369
	T1	126	0	26	128	1	443	-2	443
	R1	59	5	11	60	37	321	59	328
	GR+T1	126	-51	26	138	194	444	-317	579
	TOTAL	185	56	36	197	231	765	376	883
B165M	GR	0	-58	0	58	189	1	-300	355
	T1	126	0	26	128	1	444	-2	444
	R1	59	5	10	60	37	319	58	326
	GR+T1	126	-57	26	141	191	445	-302	570
	TOTAL	185	63	35	199	228	764	360	874
B165F	GR	0	-64	0	64	180	1	-285	337
	T1	126	0	26	128	1	430	-2	430
	R1	59	7	10	60	36	310	57	317
	GR+T1	126	-64	26	143	181	431	-287	549
	TOTAL	184	71	35	201	218	741	344	846

GLOBAL FORCES & MOMENTS

Point name	Load combination	FORCES (lb) X	Y	Z	Result	MOMENTS (ft-lb) X	Y	Z	Result
B170 -	GR	0	-195	0	195	-363	0	258	445
	T1	126	0	26	128	3	10	-4	11
	R1	53	12	23	59	16	38	25	49
	GR+T1	126	-194	26	233	-360	11	254	441
	TOTAL	179	207	49	278	376	49	279	471
B170 +	GR	0	164	0	164	-363	0	258	445
	T1	22	-1	18	28	3	10	-4	11
	R1	19	9	9	23	16	38	25	49
	GR+T1	22	163	18	166	-360	11	254	441
	TOTAL	41	172	27	179	376	49	279	471
B175 -	GR	0	90	0	90	-60	0	-45	75
	T1	22	-1	18	28	0	1	-1	1
	R1	11	6	6	14	11	1	11	15
	GR+T1	22	89	18	93	-60	1	-46	75
	TOTAL	33	95	23	103	71	2	57	91
B175 +	GR	0	25	0	25	-60	0	-45	75
	T1	22	-1	18	28	0	1	-1	1
	R1	5	4	4	8	11	1	11	15
	GR+T1	22	24	18	37	-60	1	-46	75
	TOTAL	27	28	22	45	71	2	57	91
B180	GR	0	-57	0	57	-57	0	-48	75
	T1	22	-1	18	28	-1	-1	0	1
	R1	16	18	15	28	11	1	11	16
	GR+T1	22	-58	18	64	-58	-1	-48	75
	TOTAL	38	76	33	91	68	3	59	91
B185	GR	0	-704	0	704	-327	0	222	395
	T1	22	-1	18	28	-2	-4	1	4
	R1	82	70	79	134	31	47	32	65
	GR+T1	22	-705	18	706	-329	-4	223	397
	TOTAL	103	775	97	788	360	51	254	444
B190N	GR	0	-704	0	704	-328	0	223	397
	T1	22	-1	18	28	-2	-4	1	4
	R1	82	70	79	134	31	47	32	65
	GR+T1	22	-705	18	706	-330	-4	224	398
	TOTAL	104	776	97	789	361	51	256	445
B190M	GR	0	-717	0	717	-593	0	488	768
	T1	22	-1	18	28	2	-5	-3	7
	R1	83	71	81	136	60	93	61	127
	GR+T1	22	-718	18	719	-592	-6	485	765
	TOTAL	105	789	98	802	652	99	546	856

GLOBAL FORCES & MOMENTS

Point name	Load combination	FORCES (lb) X	Y	Z	Result	MOMENTS (ft-lb) X	Y	Z	Result
B190F	GR	0	-730	0	730	-706	0	601	927
	T1	22	-1	18	28	11	-6	-15	19
	R1	84	71	82	137	93	113	97	175
	GR+T1	22	-731	18	732	-695	-6	586	909
	TOTAL	106	802	100	815	788	119	683	1050
B195 -	GR	0	-765	0	765	-706	0	600	927
	T1	22	-1	18	28	39	-6	-49	63
	R1	85	71	83	138	206	113	214	318
	GR+T1	22	-766	18	767	-667	-6	552	865
	TOTAL	107	837	100	850	872	119	766	1167
B195 +	GR	0	-813	0	813	-706	0	600	927
	T1	22	-1	18	28	39	-6	-49	63
	R1	86	72	84	140	206	113	214	318
	GR+T1	22	-814	18	815	-667	-6	552	865
	TOTAL	108	886	102	898	872	119	766	1167
B200	GR	0	-835	0	835	-706	0	600	927
	T1	22	-1	18	28	57	-6	-70	91
	R1	87	72	84	140	286	113	297	427
	GR+T1	22	-836	18	837	-649	-6	530	838
	TOTAL	108	908	102	920	935	119	827	1254
*** Segment B end ***									
*** Segment C begin ***									
A10	GR	0	-136	-2	136	-197	-1	325	380
	T1	-53	-167	79	192	28	-184	243	306
	R1	48	94	80	133	16	65	138	153
	GR+T1	-53	-303	77	317	-169	-184	567	620
	TOTAL	101	397	157	439	185	249	706	771
C05	GR	0	-173	-2	173	-332	1	189	383
	T1	-53	-167	79	192	-118	-206	97	257
	R1	49	97	77	133	74	39	55	100
	GR+T1	-53	-339	77	352	-450	-205	286	572
	TOTAL	103	436	153	474	524	244	342	671
C10	GR	0	-191	-2	191	-418	2	104	431
	T1	-53	-167	79	192	-196	-219	18	294
	R1	50	98	75	133	119	62	13	135
	GR+T1	-53	-358	77	370	-614	-217	122	663
	TOTAL	103	456	152	491	733	279	136	796

G L O B A L F O R C E S & M O M E N T S

Point name	Load combination	FORCES (lb) X	Y	Z	Result	MOMENTS (ft-lb) X	Y	Z	Result
C15 N	GR	0	-191	-2	191	-418	2	104	431
	T1	-53	-167	79	192	-196	-219	18	294
	R1	50	98	74	133	119	62	13	135
	GR+T1	-53	-358	77	370	-614	-217	122	663
	TOTAL	103	456	151	491	733	279	135	796
C15 F	GR	0	-204	-2	204	-523	2	61	527
	T1	-53	-167	79	192	-285	-208	-18	353
	R1	51	98	73	132	171	85	16	191
	GR+T1	-53	-371	77	383	-808	-205	42	835
	TOTAL	104	469	150	503	978	291	59	1022
C20 -	GR	0	-207	-2	207	-546	2	61	549
	T1	-53	-167	79	192	-303	-202	-18	365
	R1	51	98	73	132	181	89	16	203
	GR+T1	-53	-373	77	385	-848	-200	42	873
	TOTAL	104	472	150	506	1030	289	59	1071
C20 +	GR	0	-231	-2	231	-546	2	61	549
	T1	-53	-167	79	192	-303	-202	-18	365
	R1	52	99	70	132	181	89	16	203
	GR+T1	-53	-397	77	408	-848	-200	42	873
	TOTAL	106	496	147	528	1030	289	59	1071
C25 -	GR	0	-253	-2	253	-787	3	61	790
	T1	-53	-167	79	192	-470	-149	-18	493
	R1	53	99	68	131	280	131	16	310
	GR+T1	-53	-420	77	430	-1257	-147	42	1266
	TOTAL	106	519	145	549	1537	277	59	1563
C25 +	GR	0	183	-2	183	-787	3	61	790
	T1	6	58	69	91	-470	-149	-18	493
	R1	18	33	64	74	280	131	16	310
	GR+T1	6	241	68	250	-1257	-147	42	1266
	TOTAL	24	274	131	304	1537	277	59	1563
C30 -	GR	0	-10	-2	10	-33	5	61	69
	T1	6	58	69	91	37	-202	-18	206
	R1	19	37	48	63	23	26	16	39
	GR+T1	6	48	68	83	4	-197	42	201
	TOTAL	25	85	116	146	27	223	59	232
C30 +	GR	0	135	-2	135	-33	5	61	69
	T1	11	-4	58	60	37	-202	-18	206
	R1	24	10	44	51	23	26	16	39
	GR+T1	11	131	57	143	4	-197	42	201
	TOTAL	35	141	101	177	27	223	59	232

G L O B A L F O R C E S & M O M E N T S

Point name	Load combination	FORCES (lb) X	Y	Z	Result	MOMENTS (ft-lb) X	Y	Z	Result
C35 -	GR	0	125	-2	125	27	5	61	67
	T1	11	-4	58	60	35	-207	-18	211
	R1	23	10	43	50	22	26	16	38
	GR+T1	11	120	57	134	62	-202	42	216
	TOTAL	34	130	100	168	84	229	59	250
C35 +	GR	0	101	-2	101	27	5	61	67
	T1	11	-4	58	60	35	-207	-18	211
	R1	21	8	40	46	22	26	16	38
	GR+T1	11	96	57	113	62	-202	42	216
	TOTAL	32	104	97	146	84	229	59	250
C40 N	GR	0	101	-2	101	27	5	61	67
	T1	11	-4	58	60	35	-207	-18	211
	R1	21	8	40	46	22	26	16	38
	GR+T1	11	96	57	113	62	-202	42	216
	TOTAL	32	104	97	146	84	229	59	250
C40 F	GR	0	88	-2	88	78	5	41	88
	T1	11	-4	58	60	33	-201	-17	204
	R1	20	7	39	44	21	25	15	36
	GR+T1	11	83	57	102	110	-196	24	226
	TOTAL	31	91	96	135	131	221	39	259
C45	GR	0	88	-2	88	78	5	41	88
	T1	11	-4	58	60	33	-201	-17	204
	R1	19	7	37	42	21	25	15	36
	GR+T1	11	83	57	102	110	-196	24	226
	TOTAL	30	90	94	134	131	221	39	259
C50	GR	0	12	-2	12	198	2	-79	213
	T1	11	-4	58	60	23	-87	-8	90
	R1	16	4	27	32	22	32	7	39
	GR+T1	11	8	57	59	221	-85	-87	252
	TOTAL	27	12	84	89	243	117	94	285
C55	GR	0	-63	-2	63	136	-1	-17	137
	T1	11	-4	58	60	13	27	2	30
	R1	16	4	18	25	19	49	2	52
	GR+T1	11	-67	57	89	149	26	-15	152
	TOTAL	27	71	75	107	168	74	17	185
C60 N	GR	0	-63	-2	63	136	-1	-17	137
	T1	11	-4	58	60	13	27	2	30
	R1	16	4	18	24	19	49	2	52
	GR+T1	11	-67	57	89	149	26	-15	152
	TOTAL	27	72	75	107	168	74	17	185

BY105A EXHAUSTOR PIPING FLUOR DANIEL NORTHWEST, INC.
04/09/97 TANK BY-105 TO BY-106 AutoPIPE+4.60 RESULT PAGE 32

G L O B A L F O R C E S & M O M E N T S

Point name	Load combination	FORCES (lb) X	Y	Z	Result	MOMENTS (ft-lb) X	Y	Z	Result
C60 F	GR	0	-76	-2	76	99	-1	-3	99
	T1	11	-4	58	60	11	34	3	36
	R1	16	5	16	23	17	44	2	47
	GR+T1	11	-80	57	99	110	32	1	114
	TOTAL	27	85	73	116	127	76	3	148
C65	GR	0	-76	-2	76	99	-1	-3	99
	T1	11	-4	58	60	11	34	3	36
	R1	16	5	15	23	17	44	2	47
	GR+T1	11	-80	57	99	110	32	1	114
	TOTAL	28	86	72	115	127	76	3	148
C67 -	GR	0	-134	-2	134	-176	-1	-3	176
	T1	11	-4	58	60	0	4	3	5
	R1	18	7	10	21	8	9	2	12
	GR+T1	11	-138	57	150	-176	3	1	176
	TOTAL	29	145	67	162	184	12	3	184
C67 +	GR	0	106	-2	106	-176	-1	-3	176
	T1	2	0	14	14	0	4	3	5
	R1	6	6	7	11	8	9	2	12
	GR+T1	1	106	13	107	-176	3	1	176
	TOTAL	7	112	20	114	184	12	3	184
C70	GR	0	21	-2	21	-8	0	-3	9
	T1	2	0	14	14	0	1	3	3
	R1	2	1	3	4	0	0	2	2
	GR+T1	1	21	13	24	-8	1	1	8
	TOTAL	4	22	16	27	8	1	3	9
C75	GR	0	-61	-2	61	-8	0	-3	8
	T1	2	0	14	14	0	-1	3	3
	R1	3	1	4	5	0	0	2	2
	GR+T1	1	-61	13	63	-8	-1	1	8
	TOTAL	4	63	17	65	8	1	3	9
C80	GR	0	-94	-2	94	-125	1	-3	125
	T1	2	0	14	14	0	-3	3	5
	R1	5	3	5	8	3	6	2	7
	GR+T1	1	-94	13	95	-125	-3	1	125
	TOTAL	6	97	18	99	128	8	3	128

*** Segment C end ***

BY105A EXHAUSTOR PIPING FLUOR DANIEL NORTHWEST, INC.
04/09/97 TANK BY-105 TO BY-106 AutoPIPE+4.60 RESULT PAGE 33

ASME B31.3c (1992) CODE COMPLIANCE

Point name	Load combination	(Moments in ft-lb) In-Pl. Moment	Out-Pl. Moment	Torsion Moment	S.I.F In	S.I.F Out	Eq. no.	(Stress in psi) Load type	Code Stress	Code Allow.
*** Segment A begin ***										
A00	Max P						(3a)	HOOP	2010	16700
	GR + Max P	181	0		1.00	1.00	(18)	SUST	984	16700
	Cold to T1	3	1	1	1.00	1.00	(17)	DISP	2	25050
	Sus. + R1	189	9		1.00	1.00	(18)	OCC	990	22211
A01	Max P						(3a)	HOOP	2010	16700
	GR + Max P	31	0		1.00	1.00	(18)	SUST	903	16700
	Cold to T1	2	0	1	1.00	1.00	(17)	DISP	1	25050
	Sus. + R1	34	2		1.00	1.00	(18)	OCC	904	22211
A02	Max P						(3a)	HOOP	2010	16700
	GR + Max P	26	0		1.00	1.00	(18)	SUST	900	16700
	Cold to T1	2	1	1	1.00	1.00	(17)	DISP	1	25050
	Sus. + R1	28	2		1.00	1.00	(18)	OCC	901	22211
A05	Max P						(3a)	HOOP	2010	16700
	GR + Max P	40	0		1.00	1.00	(18)	SUST	907	16700
	Cold to T1	2	1	1	1.00	1.00	(17)	DISP	1	25050
	Sus. + R1	43	2		1.00	1.00	(18)	OCC	909	22211
A10	Max P						(3a)	HOOP	2010	16700
	GR + Max P	0	259		1.00	1.00	(18)	SUST	1027	16700
	Cold to T1	1	5	1	1.00	1.00	(17)	DISP	3	25050
	Sus. + R1	14	280		1.00	1.00	(18)	OCC	1040	22211
*** Segment A end ***										
*** Segment B begin ***										
A10	Max P						(3a)	HOOP	2010	16700
	GR + Max P	1	180		1.00	1.00	(18)	SUST	983	16700
	Cold to T1	185	156	189	1.00	1.00	(17)	DISP	167	25050
	Sus. + R1	68	262		1.00	1.00	(18)	OCC	1041	22211
B05	Max P						(3a)	HOOP	2010	16700
	GR + Max P	45	1		1.00	1.00	(18)	SUST	910	16700
	Cold to T1	23	349	189	1.00	1.00	(17)	DISP	216	25050
	Sus. + R1	65	57		1.00	1.00	(18)	OCC	943	22211
B10	Max P						(3a)	HOOP	656	16700
	GR + Max P	184	1		1.00	1.00	(18)	SUST	555	16700
	Cold to T1	119	436	189	1.00	1.00	(17)	DISP	692	25050
	Sus. + R1	258	67		1.00	1.00	(18)	OCC	696	22211

BY105A EXHAUSTOR PIPING FLUOR DANIEL NORTHWEST, INC.
04/09/97 TANK BY-105 TO BY-106 AutoPIPE+4.60 RESULT PAGE 34

ASME B31.3c (1992) CODE COMPLIANCE

Point name	Load combination	(Moments in ft-lb) In-Pl. Moment	Out-Pl. Moment	Torsion Moment	S.I.F In	S.I.F Out	Eq. no.	(Stress in psi) Load type	Code Stress	Code Allow.
B15 N-	Max P						(3a)	HOOP	656	16700
	GR + Max P	184	1		1.00	1.00	(18)	SUST	556	16700
	Cold to T1	119	436	189	1.00	1.00	(17)	DISP	693	25050
	Sus. + R1	258	67		1.00	1.00	(18)	OCC	697	22211
B15 N+	Max P						(3a)	HOOP	656	16700
	GR + Max P	1	184		2.27	1.89	(18)	SUST	786	16700
	Cold to T1	436	119	189	2.27	1.89	(17)	DISP	1457	25050
	Sus. + R1	67	258		2.27	1.89	(18)	OCC	1077	22211
B15 F-	Max P						(3a)	HOOP	656	16700
	GR + Max P	1	439		2.27	1.89	(18)	SUST	1466	16700
	Cold to T1	461	295	18	2.27	1.89	(17)	DISP	1672	25050
	Sus. + R1	69	617		2.27	1.89	(18)	OCC	1989	22211
B15 F+	Max P						(3a)	HOOP	656	16700
	GR + Max P	439	1		1.00	1.00	(18)	SUST	915	16700
	Cold to T1	295	461	18	1.00	1.00	(17)	DISP	774	25050
	Sus. + R1	617	69		1.00	1.00	(18)	OCC	1185	22211
B20	Max P						(3a)	HOOP	656	16700
	GR + Max P	464	0		1.00	1.00	(18)	SUST	951	16700
	Cold to T1	310	456	18	1.00	1.00	(17)	DISP	779	25050
	Sus. + R1	651	68		1.00	1.00	(18)	OCC	1232	22211
B25	Max P						(3a)	HOOP	656	16700
	GR + Max P	733	0		1.00	1.00	(18)	SUST	1331	16700
	Cold to T1	455	404	18	1.00	1.00	(17)	DISP	859	25050
	Sus. + R1	1005	74		1.00	1.00	(18)	OCC	1729	22211
B30	Max P						(3a)	HOOP	656	16700
	GR + Max P	415	1		1.00	1.00	(18)	SUST	882	16700
	Cold to T1	31	290	18	1.00	1.00	(17)	DISP	413	25050
	Sus. + R1	492	277		1.00	1.00	(18)	OCC	1287	22211
B35	Max P						(3a)	HOOP	656	16700
	GR + Max P	237	1		1.00	1.00	(18)	SUST	630	16700
	Cold to T1	28	424	18	1.00	1.00	(17)	DISP	601	25050
	Sus. + R1	299	165		1.00	1.00	(18)	OCC	878	22211
B40 N-	Max P						(3a)	HOOP	656	16700
	GR + Max P	210	1		1.00	1.00	(18)	SUST	592	16700
	Cold to T1	27	450	18	1.00	1.00	(17)	DISP	637	25050
	Sus. + R1	270	144		1.00	1.00	(18)	OCC	811	22211
B40 N+	Max P						(3a)	HOOP	656	16700
	GR + Max P	1	210		2.27	1.89	(18)	SUST	856	16700
	Cold to T1	450	27	18	2.27	1.89	(17)	DISP	1440	25050
	Sus. + R1	144	270		2.27	1.89	(18)	OCC	1340	22211

BY105A EXHAUSTOR PIPING FLUOR DANIEL NORTHWEST, INC.
04/09/97 TANK BY-105 TO BY-106 AutoPIPE+4.60 RESULT PAGE 35

ASME B31.3c (1992) CODE COMPLIANCE

Point name	Load combination	(Moments in ft-lb) In-Pl. Moment	Out-Pl. Moment	Torsion Moment	S.I.F In	S.I.F Out	Eq. no.	(Stress in psi) Load type	Code Stress	Code Allow.
B40 F-	Max P						(3a)	HOOP	656	16700
	GR + Max P	1	70		2.27	1.89	(18)	SUST	483	16700
	Cold to T1	491	30	6	2.27	1.89	(17)	DISP	1573	25050
	Sus. + R1	95	110		2.27	1.89	(18)	OCC	801	22211
B40 F+	Max P						(3a)	HOOP	656	16700
	GR + Max P	70	1		1.00	1.00	(18)	SUST	395	16700
	Cold to T1	30	491	6	1.00	1.00	(17)	DISP	695	25050
	Sus. + R1	110	95		1.00	1.00	(18)	OCC	539	22211
B50	Max P						(3a)	HOOP	656	16700
	GR + Max P	278	2		1.00	1.00	(18)	SUST	688	16700
	Cold to T1	16	482	6	1.00	1.00	(17)	DISP	681	25050
	Sus. + R1	309	117		1.00	1.00	(18)	OCC	857	22211
B55 N-	Max P						(3a)	HOOP	656	16700
	GR + Max P	180	2		1.00	1.00	(18)	SUST	551	16700
	Cold to T1	1	472	6	1.00	1.00	(17)	DISP	666	25050
	Sus. + R1	221	274		1.00	1.00	(18)	OCC	939	22211
B55 N+	Max P						(3a)	HOOP	656	16700
	GR + Max P	2	180		2.27	1.89	(18)	SUST	777	16700
	Cold to T1	472	1	6	2.27	1.89	(17)	DISP	1509	25050
	Sus. + R1	274	221		2.27	1.89	(18)	OCC	1654	22211
B55 F-	Max P						(3a)	HOOP	656	16700
	GR + Max P	2	175		2.27	1.89	(18)	SUST	761	16700
	Cold to T1	428	5	4	2.27	1.89	(17)	DISP	1370	25050
	Sus. + R1	265	226		2.27	1.89	(18)	OCC	1613	22211
B55 F+	Max P						(3a)	HOOP	656	16700
	GR + Max P	175	2		1.00	1.00	(18)	SUST	542	16700
	Cold to T1	5	428	4	1.00	1.00	(17)	DISP	605	25050
	Sus. + R1	226	265		1.00	1.00	(18)	OCC	920	22211
B60	Max P						(3a)	HOOP	656	16700
	GR + Max P	138	2		1.00	1.00	(18)	SUST	490	16700
	Cold to T1	6	371	4	1.00	1.00	(17)	DISP	525	25050
	Sus. + R1	188	242		1.00	1.00	(18)	OCC	837	22211
B65	Max P						(3a)	HOOP	656	16700
	GR + Max P	969	2		1.00	1.00	(18)	SUST	1665	16700
	Cold to T1	25	459	4	1.00	1.00	(17)	DISP	649	25050
	Sus. + R1	1059	195		1.00	1.00	(18)	OCC	1965	22211
B85	Max P						(3a)	HOOP	656	16700
	GR + Max P	417	2		1.00	1.00	(18)	SUST	884	16700
	Cold to T1	10	218	4	1.00	1.00	(17)	DISP	309	25050
	Sus. + R1	529	163		1.00	1.00	(18)	OCC	1162	22211

BY105A EXHAUSTOR PIPING FLUOR DANIEL NORTHWEST, INC.
04/09/97 TANK BY-105 TO BY-106 AutoPIPE+4.60 RESULT PAGE 36

ASME B31.3c (1992) CODE COMPLIANCE

Point name	Load combination	(Moments in ft-lb) In-Pl. Moment	Out-Pl. Moment	Torsion Moment	S.I.F In	S.I.F Out	Eq. no.	(Stress in psi) Load type	Code Stress	Code Allow.
B90	Max P						(3a)	HOOP	656	16700
	GR + Max P	643	2		1.00	1.00	(18)	SUST	1203	16700
	Cold to T1	4	21	4	1.00	1.00	(17)	DISP	31	25050
	Sus. + R1	721	233		1.00	1.00	(18)	OCC	1548	22211
B95	Max P						(3a)	HOOP	656	16700
	GR + Max P	48	2		1.00	1.00	(18)	SUST	364	16700
	Cold to T1	2	657	4	1.00	1.00	(17)	DISP	929	25050
	Sus. + R1	73	221		1.00	1.00	(18)	OCC	675	22211
B100N-	Max P						(3a)	HOOP	656	16700
	GR + Max P	48	2		1.00	1.00	(18)	SUST	364	16700
	Cold to T1	2	658	4	1.00	1.00	(17)	DISP	929	25050
	Sus. + R1	73	221		1.00	1.00	(18)	OCC	675	22211
B100N+	Max P						(3a)	HOOP	656	16700
	GR + Max P	2	48		2.27	1.89	(18)	SUST	424	16700
	Cold to T1	658	2	4	2.27	1.89	(17)	DISP	2104	25050
	Sus. + R1	221	73		2.27	1.89	(18)	OCC	1128	22211
B100M	Max P						(3a)	HOOP	656	16700
	GR + Max P	2	18		2.27	1.89	(18)	SUST	345	16700
	Cold to T1	680	2	4	2.27	1.89	(17)	DISP	2176	25050
	Sus. + R1	234	39		2.27	1.89	(18)	OCC	1090	22211
B100F-	Max P						(3a)	HOOP	656	16700
	GR + Max P	2	29		2.27	1.89	(18)	SUST	374	16700
	Cold to T1	633	5	1	2.27	1.89	(17)	DISP	2026	25050
	Sus. + R1	212	39		2.27	1.89	(18)	OCC	1046	22211
B100F+	Max P						(3a)	HOOP	656	16700
	GR + Max P	29	2		1.00	1.00	(18)	SUST	337	16700
	Cold to T1	5	633	1	1.00	1.00	(17)	DISP	894	25050
	Sus. + R1	39	212		1.00	1.00	(18)	OCC	634	22211
B105	Max P						(3a)	HOOP	656	16700
	GR + Max P	506	1		1.00	1.00	(18)	SUST	1010	16700
	Cold to T1	7	105	1	1.00	1.00	(17)	DISP	149	25050
	Sus. + R1	592	283		1.00	1.00	(18)	OCC	1426	22211
B107	Max P						(3a)	HOOP	656	16700
	GR + Max P	297	0		1.00	1.00	(18)	SUST	715	16700
	Cold to T1	2	30	1	1.00	1.00	(17)	DISP	43	25050
	Sus. + R1	385	116		1.00	1.00	(18)	OCC	920	22211
B110	Max P						(3a)	HOOP	656	16700
	GR + Max P	327	1		1.00	1.00	(18)	SUST	758	16700
	Cold to T1	2	149	1	1.00	1.00	(17)	DISP	210	25050
	Sus. + R1	400	139		1.00	1.00	(18)	OCC	978	22211

BY105A EXHAUSTOR PIPING FLUOR DANIEL NORTHWEST, INC.
04/09/97 TANK BY-105 TO BY-106 AutoPIPE+4.60 RESULT PAGE 37

ASME B31.3c (1992) CODE COMPLIANCE

Point name	Load combination	(Moments in ft-lb) In-Pl. Moment	Out-Pl. Moment	Torsion Moment	S.I.F In	S.I.F Out	Eq. no.	(Stress in psi) Load type	Code Stress	Code Allow.
B120	Max P						(3a)	HOOP	656	16700
	GR + Max P	160	1		1.00	1.00	(18)	SUST	521	16700
	Cold to T1	1	634	1	1.00	1.00	(17)	DISP	895	25050
	Sus. + R1	193	224		1.00	1.00	(18)	OCC	840	22211
B125N-	Max P						(3a)	HOOP	656	16700
	GR + Max P	160	1		1.00	1.00	(18)	SUST	521	16700
	Cold to T1	1	634	1	1.00	1.00	(17)	DISP	896	25050
	Sus. + R1	193	224		1.00	1.00	(18)	OCC	840	22211
B125N+	Max P						(3a)	HOOP	656	16700
	GR + Max P	1	160		2.27	1.89	(18)	SUST	721	16700
	Cold to T1	634	1	1	2.27	1.89	(17)	DISP	2029	25050
	Sus. + R1	224	193		2.27	1.89	(18)	OCC	1440	22211
B125F-	Max P						(3a)	HOOP	656	16700
	GR + Max P	2	7		2.27	1.89	(18)	SUST	316	16700
	Cold to T1	665	1	1	2.27	1.89	(17)	DISP	2129	25050
	Sus. + R1	202	29		2.27	1.89	(18)	OCC	959	22211
B125F+	Max P						(3a)	HOOP	656	16700
	GR + Max P	8	2		1.00	1.00	(18)	SUST	307	16700
	Cold to T1	1	665	1	1.00	1.00	(17)	DISP	940	25050
	Sus. + R1	30	202		1.00	1.00	(18)	OCC	592	22211
B130	Max P						(3a)	HOOP	656	16700
	GR + Max P	8	2		1.00	1.00	(18)	SUST	307	16700
	Cold to T1	1	665	1	1.00	1.00	(17)	DISP	940	25050
	Sus. + R1	30	202		1.00	1.00	(18)	OCC	591	22211
B135	Max P						(3a)	HOOP	656	16700
	GR + Max P	689	1		1.00	1.00	(18)	SUST	1269	16700
	Cold to T1	1	194	1	1.00	1.00	(17)	DISP	274	25050
	Sus. + R1	744	282		1.00	1.00	(18)	OCC	1673	22211
B140	Max P						(3a)	HOOP	656	16700
	GR + Max P	516	1		1.00	1.00	(18)	SUST	1024	16700
	Cold to T1	0	9	1	1.00	1.00	(17)	DISP	13	25050
	Sus. + R1	614	227		1.00	1.00	(18)	OCC	1372	22211
B145	Max P						(3a)	HOOP	656	16700
	GR + Max P	725	1		1.00	1.00	(18)	SUST	1319	16700
	Cold to T1	1	175	1	1.00	1.00	(17)	DISP	247	25050
	Sus. + R1	795	207		1.00	1.00	(18)	OCC	1626	22211
B150	Max P						(3a)	HOOP	656	16700
	GR + Max P	268	1		1.00	1.00	(18)	SUST	675	16700
	Cold to T1	1	47	1	1.00	1.00	(17)	DISP	67	25050
	Sus. + R1	358	181		1.00	1.00	(18)	OCC	959	22211

BY105A EXHAUSTOR PIPING FLUOR DANIEL NORTHWEST, INC.
04/09/97 TANK BY-105 TO BY-106 AutoPIPE+4.60 RESULT PAGE 38

ASME B31.3c (1992) CODE COMPLIANCE

Point name	Load combination	(Moments in ft-lb) In-Pl. Moment	Out-Pl. Moment	Torsion Moment	S.I.F In	S.I.F Out	(Stress in psi) Eq. no.	Load type	Code Stress	Code Allow.
B155	Max P						(3a)	HOOP	656	16700
	GR + Max P	1184	1		1.00	1.00	(18)	SUST	1968	16700
	Cold to T1	3	81	1	1.00	1.00	(17)	DISP	114	25050
	Sus. + R1	1301	214		1.00	1.00	(18)	OCC	2311	22211
B160	Max P						(3a)	HOOP	656	16700
	GR + Max P	315	1		1.00	1.00	(18)	SUST	741	16700
	Cold to T1	2	443	1	1.00	1.00	(17)	DISP	626	25050
	Sus. + R1	374	322		1.00	1.00	(18)	OCC	1202	22211
B165N-	Max P						(3a)	HOOP	656	16700
	GR + Max P	315	1		1.00	1.00	(18)	SUST	741	16700
	Cold to T1	2	443	1	1.00	1.00	(17)	DISP	626	25050
	Sus. + R1	374	322		1.00	1.00	(18)	OCC	1202	22211
B165N+	Max P						(3a)	HOOP	656	16700
	GR + Max P	1	314		2.27	1.89	(18)	SUST	1133	16700
	Cold to T1	443	2	1	2.27	1.89	(17)	DISP	1419	25050
	Sus. + R1	322	373		2.27	1.89	(18)	OCC	2171	22211
B165M	Max P						(3a)	HOOP	656	16700
	GR + Max P	1	349		2.27	1.89	(18)	SUST	1226	16700
	Cold to T1	444	2	1	2.27	1.89	(17)	DISP	1421	25050
	Sus. + R1	320	416		2.27	1.89	(18)	OCC	2262	22211
B165F-	Max P						(3a)	HOOP	656	16700
	GR + Max P	1	329		2.27	1.89	(18)	SUST	1174	16700
	Cold to T1	430	2	0	2.27	1.89	(17)	DISP	1376	25050
	Sus. + R1	311	396		2.27	1.89	(18)	OCC	2182	22211
B165F+	Max P						(3a)	HOOP	656	16700
	GR + Max P	329	1		1.00	1.00	(18)	SUST	760	16700
	Cold to T1	2	430	0	1.00	1.00	(17)	DISP	608	25050
	Sus. + R1	395	311		1.00	1.00	(18)	OCC	1208	22211
B170	Max P						(3a)	HOOP	656	16700
	GR + Max P	439	0		1.00	1.00	(18)	SUST	915	16700
	Cold to T1	5	10	0	1.00	1.00	(17)	DISP	16	25050
	Sus. + R1	465	38		1.00	1.00	(18)	OCC	980	22211
B175	Max P						(3a)	HOOP	656	16700
	GR + Max P	10	0		1.00	1.00	(18)	SUST	310	16700
	Cold to T1	1	1	0	1.00	1.00	(17)	DISP	2	25050
	Sus. + R1	11	1		1.00	1.00	(18)	OCC	312	22211
B185	Max P						(3a)	HOOP	656	16700
	GR + Max P	388	0		1.00	1.00	(18)	SUST	844	16700
	Cold to T1	2	4	0	1.00	1.00	(17)	DISP	6	25050
	Sus. + R1	430	47		1.00	1.00	(18)	OCC	933	22211

BY105A EXHAUSTOR PIPING FLUOR DANIEL NORTHWEST, INC.
04/09/97 TANK BY-105 TO BY-106 AutoPIPE+4.60 RESULT PAGE 39

ASME B31.3c (1992) CODE COMPLIANCE

Point name	Load combination	(Moments in ft-lb) In-Pl. Moment	Out-Pl. Moment	Torsion Moment	S.I.F In	S.I.F Out	(Stress in psi) Eq. no.	Load type	Code Stress	Code Allow.
B190N-	Max P						(3a)	HOOP	656	16700
	GR + Max P	390	0		1.00	1.00	(18)	SUST	846	16700
	Cold to T1	2	4	0	1.00	1.00	(17)	DISP	6	25050
	Sus. + R1	432	47		1.00	1.00	(18)	OCC	935	22211
B190N+	Max P						(3a)	HOOP	656	16700
	GR + Max P	390	0		2.27	1.89	(18)	SUST	1542	16700
	Cold to T1	2	4	0	2.27	1.89	(17)	DISP	12	25050
	Sus. + R1	431	47		2.27	1.89	(18)	OCC	1726	22211
B190M	Max P						(3a)	HOOP	656	16700
	GR + Max P	765	53		2.27	1.89	(18)	SUST	2747	16700
	Cold to T1	4	5	3	2.27	1.89	(17)	DISP	18	25050
	Sus. + R1	848	130		2.27	1.89	(18)	OCC	3085	22211
B190F-	Max P						(3a)	HOOP	656	16700
	GR + Max P	924	75		2.27	1.89	(18)	SUST	3259	16700
	Cold to T1	18	2	6	2.27	1.89	(17)	DISP	59	25050
	Sus. + R1	1042	139		2.27	1.89	(18)	OCC	3675	22211
B190F+	Max P						(3a)	HOOP	656	16700
	GR + Max P	706	601		1.00	1.00	(18)	SUST	1605	16700
	Cold to T1	11	15	6	1.00	1.00	(17)	DISP	27	25050
	Sus. + R1	799	697		1.00	1.00	(18)	OCC	1795	22211
B195	Max P						(3a)	HOOP	656	16700
	GR + Max P	706	600		1.00	1.00	(18)	SUST	1605	16700
	Cold to T1	39	49	6	1.00	1.00	(17)	DISP	89	25050
	Sus. + R1	912	815		1.00	1.00	(18)	OCC	2024	22211
B200	Max P						(3a)	HOOP	656	16700
	GR + Max P	706	600		1.00	1.00	(18)	SUST	1605	16700
	Cold to T1	57	70	6	1.00	1.00	(17)	DISP	128	25050
	Sus. + R1	992	898		1.00	1.00	(18)	OCC	2187	22211

*** Segment B end ***

*** Segment C begin ***

A10	Max P						(3a)	HOOP	2010	16700
	GR + Max P	1	90		1.00	1.00	(18)	SUST	935	16700
	Cold to T1	184	192	152	1.00	1.00	(17)	DISP	167	25050
	Sus. + R1	65	195		1.00	1.00	(18)	OCC	1002	22211
C05	Max P						(3a)	HOOP	2010	16700
	GR + Max P	101	1		1.00	1.00	(18)	SUST	940	16700
	Cold to T1	15	206	152	1.00	1.00	(17)	DISP	140	25050
	Sus. + R1	116	40		1.00	1.00	(18)	OCC	963	22211

ASME B31.3c (1992) CODE COMPLIANCE

Point name	Load combination	(Moments in ft-lb) In-Pl. Moment	Out-Pl. Moment	Torsion Moment	S.I.F In	S.I.F Out	Eq. no.	(Stress in psi) Load type	Code Stress	Code Allow.
C10	Max P						(3a)	HOOP	656	16700
	GR + Max P	222	2		1.00	1.00	(18)	SUST	609	16700
	Cold to T1	126	219	152	1.00	1.00	(17)	DISP	416	25050
	Sus. + R1	300	64		1.00	1.00	(18)	OCC	750	22211
C15 N-	Max P						(3a)	HOOP	656	16700
	GR + Max P	222	2		1.00	1.00	(18)	SUST	610	16700
	Cold to T1	126	219	152	1.00	1.00	(17)	DISP	416	25050
	Sus. + R1	300	64		1.00	1.00	(18)	OCC	750	22211
C15 N+	Max P						(3a)	HOOP	656	16700
	GR + Max P	2	222		2.27	1.89	(18)	SUST	888	16700
	Cold to T1	219	126	152	2.27	1.89	(17)	DISP	805	25050
	Sus. + R1	64	300		2.27	1.89	(18)	OCC	1175	22211
C15 F-	Max P						(3a)	HOOP	656	16700
	GR + Max P	2	523		2.27	1.89	(18)	SUST	1691	16700
	Cold to T1	208	285	18	2.27	1.89	(17)	DISP	1010	25050
	Sus. + R1	88	694		2.27	1.89	(18)	OCC	2221	22211
C15 F+	Max P						(3a)	HOOP	656	16700
	GR + Max P	523	2		1.00	1.00	(18)	SUST	1035	16700
	Cold to T1	285	208	18	1.00	1.00	(17)	DISP	499	25050
	Sus. + R1	694	88		1.00	1.00	(18)	OCC	1304	22211
C20	Max P						(3a)	HOOP	656	16700
	GR + Max P	546	2		1.00	1.00	(18)	SUST	1066	16700
	Cold to T1	303	202	18	1.00	1.00	(17)	DISP	515	25050
	Sus. + R1	727	92		1.00	1.00	(18)	OCC	1352	22211
C25	Max P						(3a)	HOOP	656	16700
	GR + Max P	787	3		1.00	1.00	(18)	SUST	1408	16700
	Cold to T1	470	149	18	1.00	1.00	(17)	DISP	697	25050
	Sus. + R1	1067	134		1.00	1.00	(18)	OCC	1844	22211
C30	Max P						(3a)	HOOP	656	16700
	GR + Max P	33	5		1.00	1.00	(18)	SUST	343	16700
	Cold to T1	37	202	18	1.00	1.00	(17)	DISP	291	25050
	Sus. + R1	56	32		1.00	1.00	(18)	OCC	392	22211
C35	Max P						(3a)	HOOP	656	16700
	GR + Max P	27	5		1.00	1.00	(18)	SUST	335	16700
	Cold to T1	35	207	18	1.00	1.00	(17)	DISP	298	25050
	Sus. + R1	49	32		1.00	1.00	(18)	OCC	383	22211
C40 N-	Max P						(3a)	HOOP	656	16700
	GR + Max P	27	5		1.00	1.00	(18)	SUST	335	16700
	Cold to T1	35	207	18	1.00	1.00	(17)	DISP	298	25050
	Sus. + R1	49	32		1.00	1.00	(18)	OCC	384	22211

ASME B31.3c (1992) CODE COMPLIANCE

Point name	Load combination	(Moments in ft-lb) In-Pl. Moment	Out-Pl. Moment	Torsion Moment	S.I.F In	S.I.F Out	Eq. no.	(Stress in psi) Load type	Code Stress	Code Allow.
C40 N+	Max P						(3a)	HOOP	656	16700
	GR + Max P	5	28		2.27	1.89	(18)	SUST	372	16700
	Cold to T1	207	35	19	2.27	1.89	(17)	DISP	671	25050
	Sus. + R1	32	49		2.27	1.89	(18)	OCC	475	22211
C40 F-	Max P						(3a)	HOOP	656	16700
	GR + Max P	5	27		2.27	1.89	(18)	SUST	369	16700
	Cold to T1	201	36	10	2.27	1.89	(17)	DISP	650	25050
	Sus. + R1	30	49		2.27	1.89	(18)	OCC	468	22211
C40 F+	Max P						(3a)	HOOP	656	16700
	GR + Max P	26	5		1.00	1.00	(18)	SUST	333	16700
	Cold to T1	36	201	11	1.00	1.00	(17)	DISP	289	25050
	Sus. + R1	48	30		1.00	1.00	(18)	OCC	380	22211
C45	Max P						(3a)	HOOP	656	16700
	GR + Max P	26	5		1.00	1.00	(18)	SUST	333	16700
	Cold to T1	36	201	11	1.00	1.00	(17)	DISP	289	25050
	Sus. + R1	48	30		1.00	1.00	(18)	OCC	380	22211
C50	Max P						(3a)	HOOP	656	16700
	GR + Max P	196	2		1.00	1.00	(18)	SUST	573	16700
	Cold to T1	22	87	11	1.00	1.00	(17)	DISP	127	25050
	Sus. + R1	215	34		1.00	1.00	(18)	OCC	625	22211
C55	Max P						(3a)	HOOP	656	16700
	GR + Max P	109	1		1.00	1.00	(18)	SUST	449	16700
	Cold to T1	8	27	11	1.00	1.00	(17)	DISP	42	25050
	Sus. + R1	123	50		1.00	1.00	(18)	OCC	521	22211
C60 N-	Max P						(3a)	HOOP	656	16700
	GR + Max P	109	1		1.00	1.00	(18)	SUST	449	16700
	Cold to T1	8	27	11	1.00	1.00	(17)	DISP	42	25050
	Sus. + R1	123	50		1.00	1.00	(18)	OCC	521	22211
C60 N+	Max P						(3a)	HOOP	656	16700
	GR + Max P	1	109		2.27	1.89	(18)	SUST	585	16700
	Cold to T1	27	8	11	2.27	1.89	(17)	DISP	90	25050
	Sus. + R1	50	123		2.27	1.89	(18)	OCC	746	22211
C60 F-	Max P						(3a)	HOOP	656	16700
	GR + Max P	1	99		2.27	1.89	(18)	SUST	559	16700
	Cold to T1	34	11	3	2.27	1.89	(17)	DISP	112	25050
	Sus. + R1	45	116		2.27	1.89	(18)	OCC	707	22211
C60 F+	Max P						(3a)	HOOP	656	16700
	GR + Max P	99	1		1.00	1.00	(18)	SUST	435	16700
	Cold to T1	11	34	3	1.00	1.00	(17)	DISP	50	25050
	Sus. + R1	116	45		1.00	1.00	(18)	OCC	502	22211

ASME B31.3c (1992) CODE COMPLIANCE

Point name	Load combination	In-Pl. Moment (Moments in ft-lb)	Out-Pl. Moment	Torsion Moment	S.I.F In	S.I.F Out	Eq. no.	Load type	Code Stress (Stress in psi)	Code Allow.
C65	Max P						(3a)	HOOP	656	16700
	GR + Max P	99	1		1.00	1.00	(18)	SUST	435	16700
	Cold to T1	11	34	3	1.00	1.00	(17)	DISP	50	25050
	Sus. + R1	116	45		1.00	1.00	(18)	OCC	502	22211
C67	Max P						(3a)	HOOP	656	16700
	GR + Max P	176	1		1.00	1.00	(18)	SUST	544	16700
	Cold to T1	0	4	3	1.00	1.00	(17)	DISP	7	25050
	Sus. + R1	184	9		1.00	1.00	(18)	OCC	561	22211
C70	Max P						(3a)	HOOP	656	16700
	GR + Max P	8	0		1.00	1.00	(18)	SUST	307	16700
	Cold to T1	0	1	3	1.00	1.00	(17)	DISP	5	25050
	Sus. + R1	8	1		1.00	1.00	(18)	OCC	308	22211
C75	Max P						(3a)	HOOP	656	16700
	GR + Max P	8	0		1.00	1.00	(18)	SUST	307	16700
	Cold to T1	0	1	3	1.00	1.00	(17)	DISP	5	25050
	Sus. + R1	8	1		1.00	1.00	(18)	OCC	308	22211
C80	Max P						(3a)	HOOP	656	16700
	GR + Max P	125	1		1.00	1.00	(18)	SUST	472	16700
	Cold to T1	0	3	3	1.00	1.00	(17)	DISP	6	25050
	Sus. + R1	128	6		1.00	1.00	(18)	OCC	481	22211

*** Segment C end ***

S Y S T E M S U M M A R Y

Maximum displacements (in)

Maximum X :	0.324	Point : B165F	Load Comb.: T1
Maximum Y :	0.171	Point : B165N	Load Comb.: TOTAL
Maximum Z :	0.188	Point : B55 N	Load Comb.: T1
Max. total:	0.371	Point : B175	Load Comb.: TOTAL

Maximum rotations (deg)

Maximum X :	0.207	Point : B165F	Load Comb.: TOTAL
Maximum Y :	0.098	Point : B175	Load Comb.: TOTAL
Maximum Z :	0.063	Point : B180	Load Comb.: TOTAL
Max. total:	0.227	Point : B170	Load Comb.: TOTAL

Maximum restraint forces(lb)

Maximum X :	248	Point : B105	Load Comb.: TOTAL
Maximum Y :	908	Point : B200	Load Comb.: TOTAL
Maximum Z :	469	Point : A10	Load Comb.: TOTAL
Max. total:	920	Point : B200	Load Comb.: TOTAL

Maximum restraint moments(ft-lb)

Maximum X :	935	Point : B200	Load Comb.: TOTAL
Maximum Y :	119	Point : B200	Load Comb.: TOTAL
Maximum Z :	827	Point : B200	Load Comb.: TOTAL
Max. total:	1254	Point : B200	Load Comb.: TOTAL

SYSTEM SUMMARY

Maximum pipe forces (lb)

Maximum X :	320	Point : B145	Load Comb.: TOTAL
Maximum Y :	908	Point : B200	Load Comb.: TOTAL
Maximum Z :	326	Point : A10	Load Comb.: TOTAL
Max. total:	920	Point : B200	Load Comb.: TOTAL

Maximum pipe moments (ft-lb)

Maximum X :	1537	Point : C25	Load Comb.: TOTAL
Maximum Y :	914	Point : B100M	Load Comb.: TOTAL
Maximum Z :	1304	Point : B155	Load Comb.: TOTAL
Max. total:	1563	Point : C25	Load Comb.: TOTAL

SYSTEM SUMMARY

Maximum sustained stress

Point : B190F
Stress psi : 3259
Allowable psi : 16700
Ratio : 0.20
Load combination : GR + Max P

Maximum displacement stress

Point : B100M
Stress psi : 2176
Allowable psi : 25050
Ratio : 0.09
Load combination : Cold to T1

Maximum occasional stress

Point : B190F
Stress psi : 3675
Allowable psi : 22211
Ratio : 0.17
Load combination : Sus. + R1

Maximum hoop stress

Point : A00
Stress psi : 2010
Allowable psi : 16700
Ratio : 0.12
Load combination : Max P

Maximum sustained stress ratio

Point : B190F
Stress psi : 3259
Allowable psi : 16700
Ratio : 0.20
Load combination : GR + Max P

Maximum displacement stress ratio

Point : B100M
Stress psi : 2176
Allowable psi : 25050
Ratio : 0.09
Load combination : Cold to T1

S Y S T E M S U M M A R Y

Maximum occasional stress ratio

Point		: B190F
Stress	psi	: 3675
Allowable	psi	: 22211
Ratio		: 0.17
Load combination		: Sus. + R1

Maximum hoop stress ratio

Point		: A00
Stress	psi	: 2010
Allowable	psi	: 16700
Ratio		: 0.12
Load combination		: Max P

* * * The system satisfies ASME B31.3 code requirements * * *
* * * for the selected options * * *

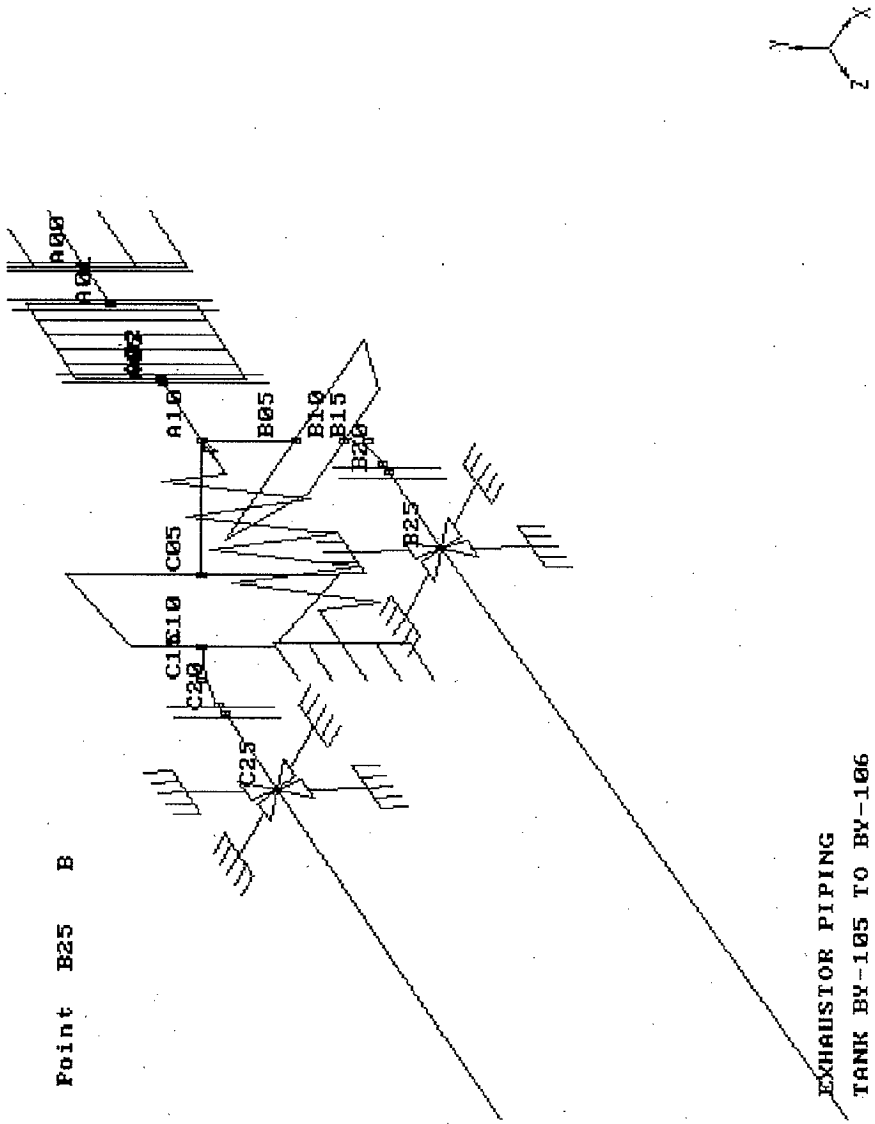
A00
A05
A10
B05
B10
B15
B20
B25
C05
C10
C20
C25
Point B25 B
EXHAUSTOR PIPING
TANK BY-105 TO BY-106
X
Y
Z

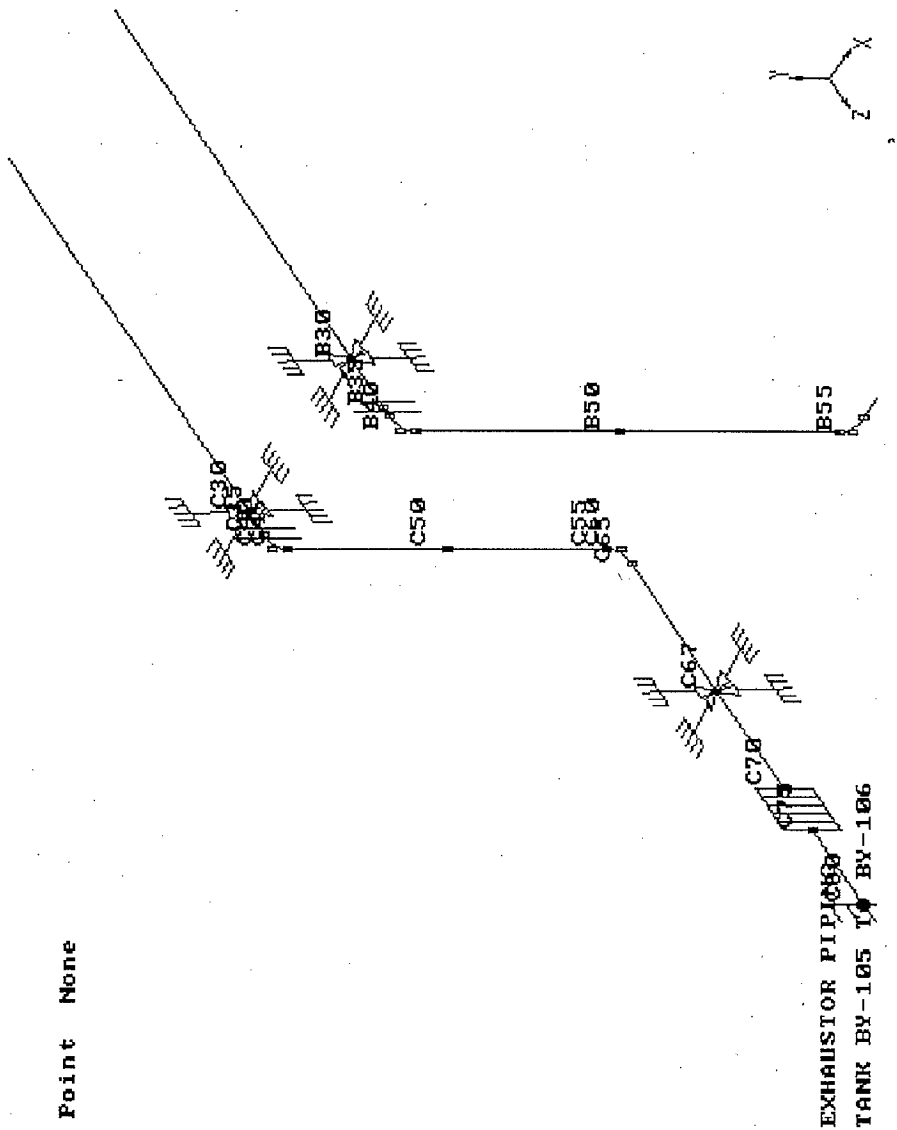
Point None
EXHAUSTOR PIPING
TANK BY-105 TO BY-106
B30
B50
B55
C20
C50
C55
C67
C70
X
Y
Z

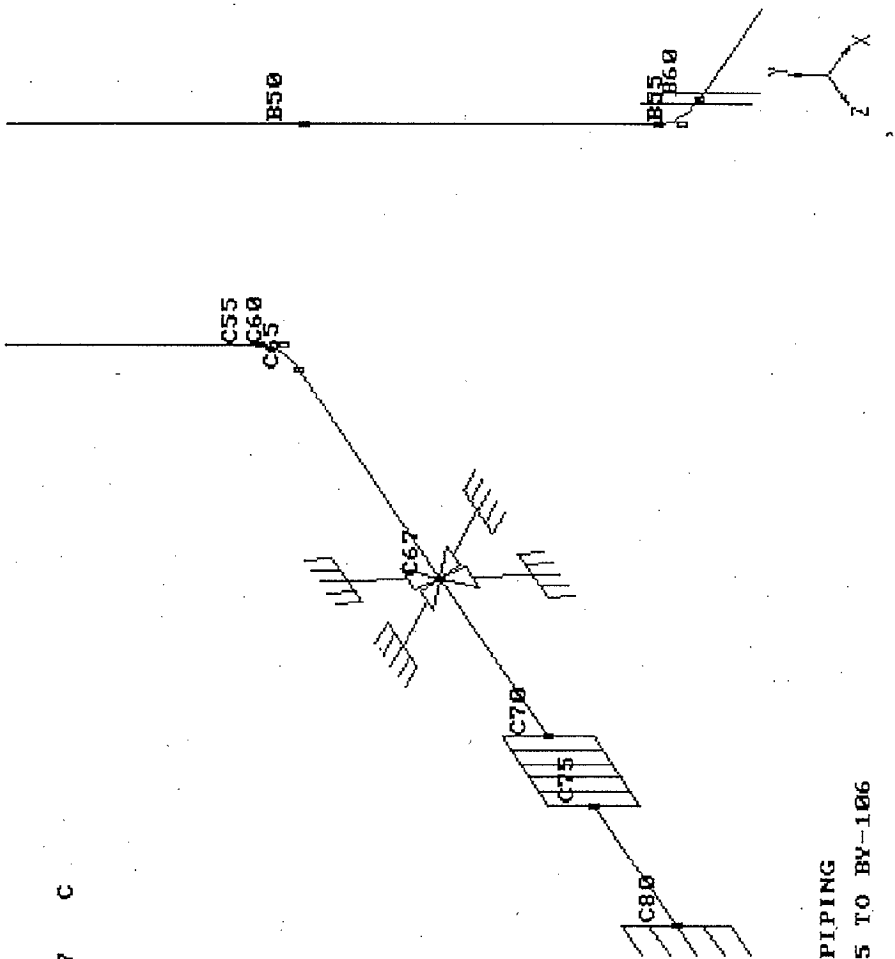

Point C67 C

EXHAUSTOR PIPING
TANK BY-105 TO BY-106

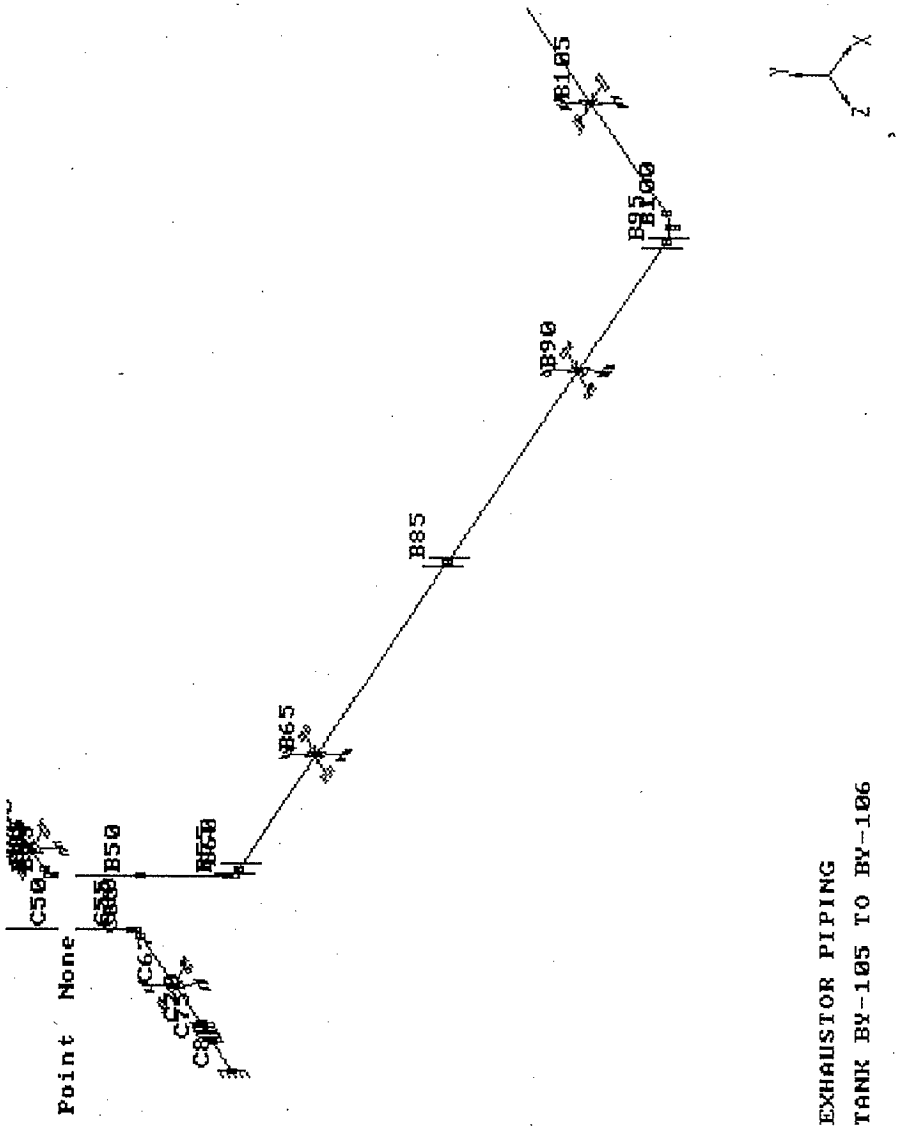

EXHAUSTOR PIPING
TANK BY-105 TO BY-106

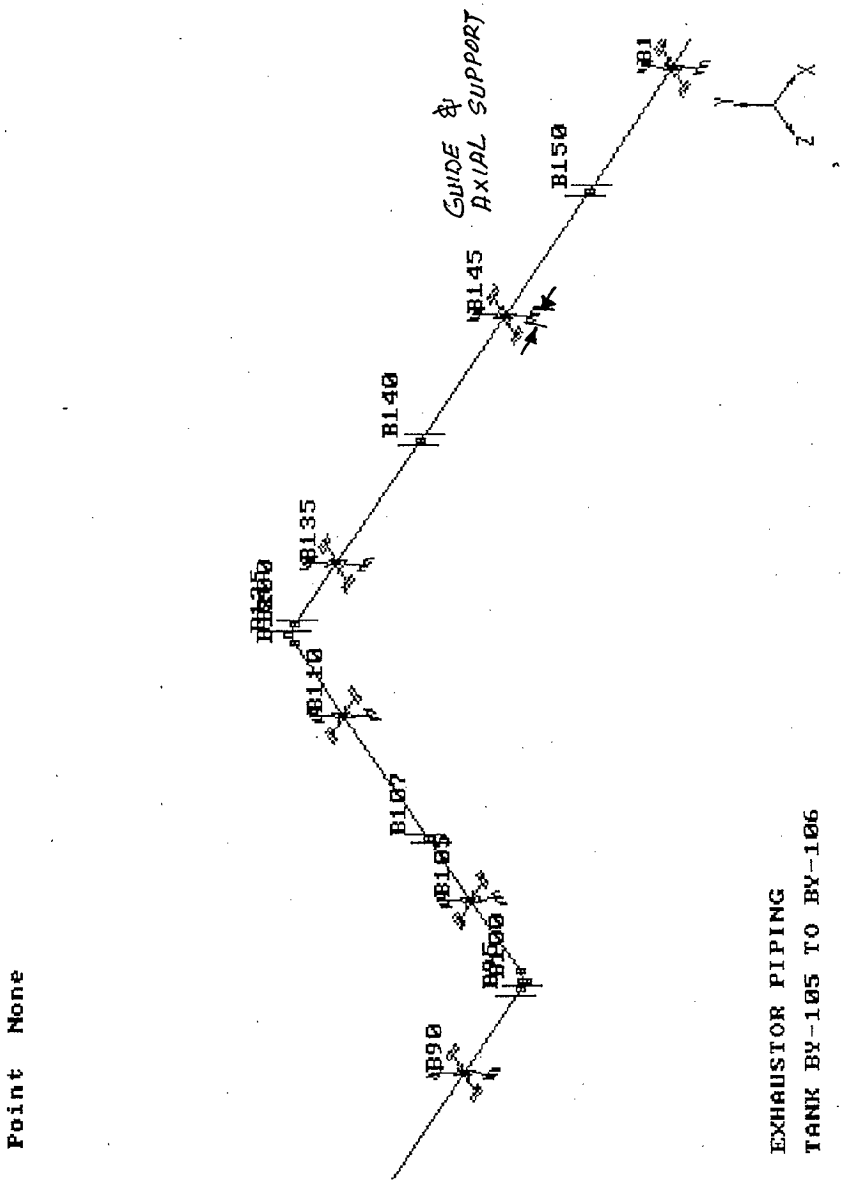
Point None
B90
B107
B135
B140
B145
B150
B1
GUIDE & AXIAL SUPPORT
EXHAUSTOR PIPING
TANK BY-105 TO BY-106

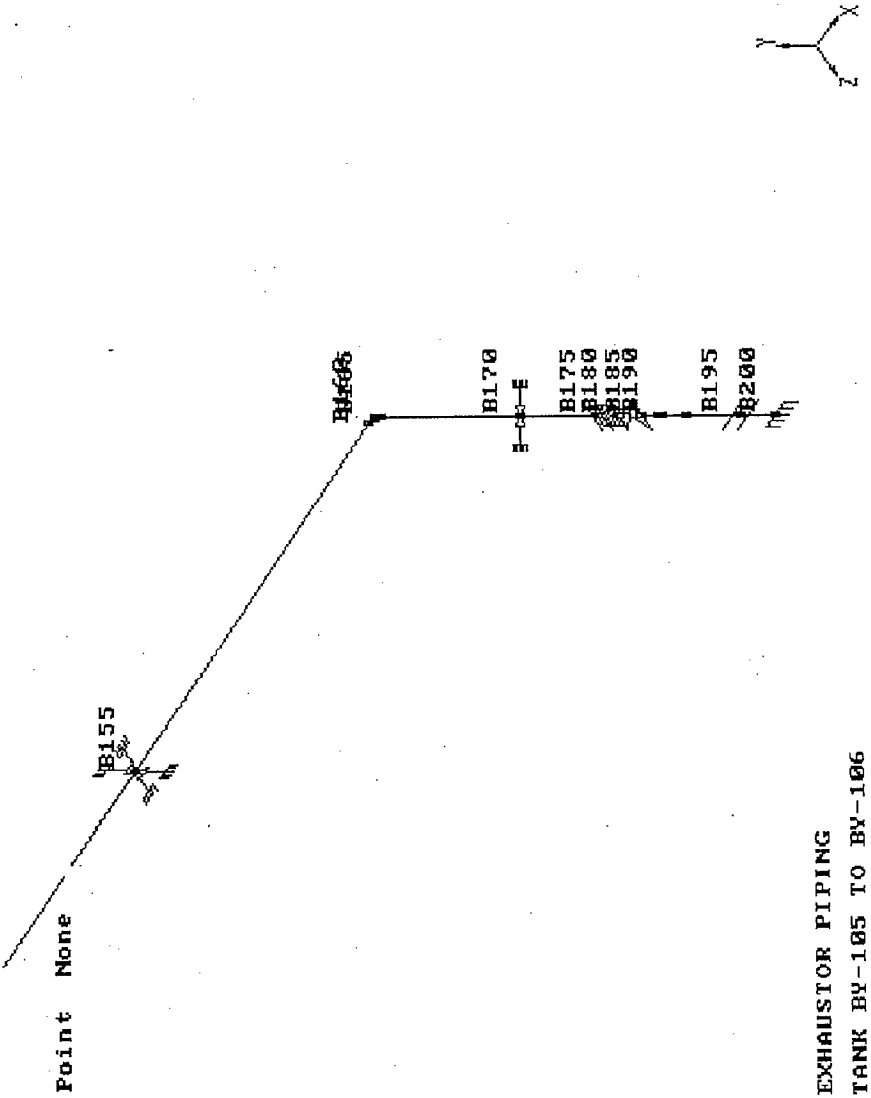

EXHAUSTOR PIPING
TANK BY-105 TO BY-106

APPENDIX D: DESIGN CALCULATIONS FOR TANK S-107 INSTALLATION

Fluor Daniel Northwest, Inc.	CALCULATION IDENTIFICATION AND INDEX	Page 1 of Date April 17, 1997

This sheet shows the status and description of the attached Design Analysis sheets.

Discipline Mechanical WO/Job No. E40690 Calculation No. M-4

Project No. & Name S-107 1000 CFM Exhauster Installation

Calculation Item

These calculations apply to:

Dwg. No. ECN 618794 Rev. No.

Dwg. No. Rev. No.

Other (Study, CDR) Rev. No.

The status of these calculations is:

[] Preliminary Calculations

[X] Final Calculations

[] Check Calculations (On Calculation Dated)

[] Void Calculation (Reason Voided)

Incorporated in Final Drawings? [] Yes [X] No

This calculation verified by independent "check" calculations? [] Yes [] No

Original and Revised Calculation Approvals:

	Rev. 0 Signature/Date	Rev. 1 Signature/Date	Rev. 2 Signature/Date
Originator	Craig M. Kelly 5/29/97		
Checked by	D. Wood 5/29/97		
Approved by	R.W. [illegible] 5/29/97		
Checked Against Approved Vendor Data			

INDEX

Design Analysis Page No.	Description
3	Analysis of piping and supports
3	Analysis of tank inlet HEPA filter installation
4	Analysis of exhauster inlet
7	Determination of ventilation pressure losses
10	Attachments
	Autopipe piping analysis results

Fluor Daniel Northwest, Inc.

Calc. No. M-4
Revision 0
Page No. 2 of 9

DESIGN ANALYSIS

Client LMHC
Subject S-107 Exhauster Installation
Location 241-S-107

WO/Job No. E40690
Date 4-17-97 By C. M. Keller
Checked 5/28/97 By D.A. MOODY
Revised By

OBJECTIVE:

Perform analysis of exhauster and HEPA filter installation on waste tank 241-S-107 to verify stresses are within acceptable values and to determine expected pressure drop in the ventilation ducting.

CRITERIA:

Ventilation and condensate piping are considered safety significant/safety class 2. The waste tank including risers are considered safety class 1. Design loads for analysis are specified in *Design Loads for Facilities* GC-LOAD-01, Rev 1. Piping is analyzed using criteria specified in the ASME B31.3 *Process Piping Code*.

ASSUMPTIONS/GIVENS:

Piping stresses and support loads used in the analysis were determined using Autopipe and are provided in the Attachments section. Analysis results for comparable installation designs have been applied where possible. These other installations were analyzed in calculations M-1 through M-3 of the same Job Number.

CALCULATION METHOD:

Hand calculations and Autopipe analysis have been used to verify adequacy of the design.

REFERENCES:

1) Manual of Steel Construction, Allowable Stress Design, 9th edition, American Society of Civil Engineers.

2) Marks Standard Handbook for Mechanical Engineers, 9th edition, McGraw-Hill

KAISER ENGINEERS
HANFORD

DESIGN ANALYSIS

Calc. No. M-4
Revision 0
Page No. 3 of 9

Client
Subject
Location

WO/Job No. E40690
Date 4/17/97 By CM KELLER
Checked 5/28/97 By DA MOODY
Revised By

1) ATTACHED AUTOPIPE ANALYSIS DETERMINED PIPING STRESSES TO BE WITHIN ALLOWABLES PER ASME B31.3 Process Piping Code.

2) CHECK FOR OVERTURNING OF PIPE SUPPORTS

WIND LOADING 17.22 #/ft OF DUCT

CONSIDER WIND LOAD FOR 15' OF DUCT $F_W = 258^{\#}$

WIND LOAD IS GREATER THEN SEISMIC REACTION

WORST CASE HORIZONTAL SUPPORT LOAD DUE TO GRAVITY AND THERMAL EFFECTS IS 86# AT LOCATION A08

DISTANCE FROM PIPE ℄ TO GRADE IS $(668.87 - 665')(12) = 46''$

OVERTURN MOMENT IS $M_o = (258 + 86)(42) = 14{,}448$ in-lb

RESTORING MOMENT IS $(9\,ft^3)(150\,\#/ft^3)(18'') = 24\,300$ in-lb.

$$2/3\, M_R \geq M_o$$

$$16\,200 > 14\,448 \quad OK$$

∴ Support base SIZE IS ADEQUATE TO PREVENT OVERTURNING.

BENDING MOMENT ON SUPPORT IS LESS THEN ANALYZED IN CALCULATION M-2. SATISFACTORY RESULTS IN THAT ANALYSIS JUSTIFIES NOT RE-ANALYZING THE SUPPORTS FURTHER.

KAISER ENGINEERS
HANFORD

DESIGN ANALYSIS

Calc. No. M-4
Revision 0
Page No. 4 of 9

Client	WO/Job No. E 40690		
Subject	Date 4/17/97	By CM KELLER	
	Checked 5/28/97	By DA MOODY	
Location	Revised	By	

3) REACTIONS ON THE CONDENSOR PIT COVER AND EXHAUSTER PLENUM WERE DETERMINED IN THE ATTACHED AUTOPIPE ANALYSIS. REACTIONS ARE LESS THEN, OR ONLY SLIGHTLY GREATER, THEN ANALYZED IN CALCULATION M-3. SATISFACTORY RESULTS, WITH A SIGNIFICANT SAFETY MARGIN, IN THE PREVIOUS ANALYSIS IS APPLICABLE TO THIS INSTALLATION.

4) THE TANK INLET HEPA FILTER INSTALLATION DESIGN IS THE SAME AS THAT WHICH WAS ANALYZED IN CALCULATION M-1. ANALYSIS OF THE FILTER INSTALLATION DESIGN PROVIDED SATISFACTORY RESULTS.

Client	WO/Job No. E40690		
Subject	Date 4-16-97	By CRAIG M. KELLER	
	Checked 5-28-97	By DA MOODY	
Location	Revised	By	

5) REACTIONS ON EXHAUSTER INLET:

$F_x = 31^{\#}$ $\quad M_x = 308$ ft·lb

$F_y = 320^{\#}$ $\quad M_y = 36$ ft·lb

$F_z = 29^{\#}$ $\quad M_z = 70$ ft·lb

REACTIONS ON INLET SUPPORT ARE AS FOLLOWS:

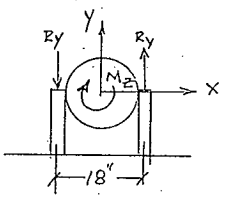

REACTION DUE TO M_z:

$M_z = 2 R_y (9/12')$

$70 = 2(R_y)(9/12') \Rightarrow R_y = 47^{\#}$

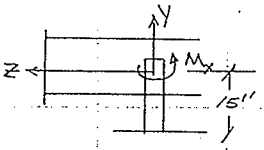

REACTION DUE TO M_x:

$M_x = 2 R_z (15/12')$

$308 = 2(R_z)(15/12') \Rightarrow R_z = 123^{\#}$

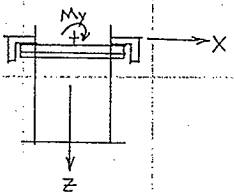

REACTION DUE TO M_y:

$M_y = 2 R_z (9/12')$

$36 = 2(R_z)(9/12') \Rightarrow R_z = 24^{\#}$

TOTAL SUPPORT FORCES:

$F_x = 31^{\#}$

$F_y = 320 + 47 = 367^{\#}$

$F_z = 29 + 123 + 24 = 176^{\#}$

KAISER ENGINEERS
HANFORD

DESIGN ANALYSIS

Calc. No. M-4
Revision 0
Page No. 6 of 9

Client	WO/Job No. E40690	
Subject	Date 4-16-97	By CM KELLER
	Checked 5-28-97	By DA MOODY
Location	Revised	By

For Combined Compression AND Bending STRESSES,

$$\frac{\sigma_a}{S_a} + \frac{\sigma_{bx}}{S_{bx}} + \frac{\sigma_{bz}}{S_{bz}} \leq 1 \qquad \text{ref 1} \qquad \text{eq H1-3}$$

where, σ_a = AXIAL COMPRESSIVE STRESS

σ_{bx} = Bending Stress in X-dir

σ_{bz} = Bending Stress in Z-dir

S_a, S_{bx}, S_{bz} = ALLOWABLE STRESS = 22 Ksi

$$\sigma_A = \frac{F_y}{A} = \frac{367^{\#}}{1.19\,in^2} = 308\ psi$$

$$\sigma_{bx} = \frac{F_x(15'')}{S_{xx}} = \frac{31(15)}{.260\,in^3} = 1788\ psi$$

$$\sigma_{bz} = \frac{F_z(15'')}{S_{zz}} = \frac{174(15)}{.542\,in^3} = 4871\ psi$$

$$\frac{308}{22000} + \frac{1788}{22000} + \frac{4871}{22000} = .32 < 1 \quad OK$$

KAISER ENGINEERS
HANFORD

DESIGN ANALYSIS

Calc. No. M-4
Revision 0
Page No. 7 of 9

Client	WO/Job No. E40690	
Subject	Date 4-16-97	By CM KELLER
	Checked 5-28-97	By DA MOODY
Location	Revised	By

CALCULATE PRESSURE DROP FROM ATMOSPHERE TO EXHAUSTER INLET.

Saturated Air @ 140°F

FLOWRATE Q = 500 CFM (LOWER RANGE OF EXHAUSTER)

ASSUME 1" W.G. Pressure drop FOR INLET FILTER

Determine ΔP LOSS FOR THE FOLLOWING:

- TANK INLET FILTER AND RISER
- TANK OUTLET
- VENTILATION PLENUM

TANK INLET FILTER AND RISER:

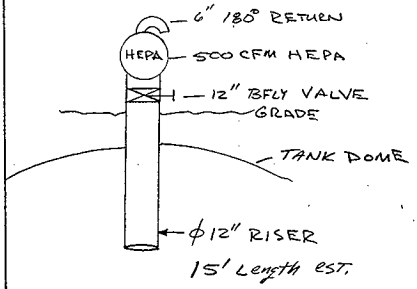

LOSSES

6" 180° RETURN	Le = 25' ref 2
HEPA FILTER	Δp = 1" WG est.
BFLY VALVE	Le = 23' est.
12" RISER	L = 15' ref 2
INLET LOSS	Le = 73' ref 2

KAISER ENGINEERS
HANFORD

Calc. No. M-4
Revision 0
Page No. 8 of 9

DESIGN ANALYSIS

Client	WO/Job No. E40690	
Subject	Date 4-16-97	By CM KELLER
	Checked 5-28-97	By DA MOODY
Location	Revised	By

TANK OUTLET:

TANK OUTLET IS THROUGH A ϕ24" DIAMETER OPENING LEADING TO A CONDENSOR PIT. FRICTION LOSSES IN THE 24" PIPE AND THE PIT ARE NEGLIGIBLE.

VENTILATION PLENUM:

THE VENTILATION PLENUM FROM TANK TO EXHAUSTER CONSISTS OF THE FOLLOWING ITEMS AND THEIR LOSSES.

ENTRANCE LOSS	Le = 19'	ref 2
6" L.R. ELBOW	Le = 10'	ref 2
6" BFLY VALVE	Le = 28'	est.
6" PIPE, 27' LENGTH	L = 27'	
6" LR ELBOW	Le = 10'	ref 2
6" PIPE, 13' LENGTH	L = 13'	
6"X12" EXPANSION	Le = 22'	ref 2
12" EXPANSION JOINT	Le = 20'	est

KAISER ENGINEERS
HANFORD

DESIGN ANALYSIS

Calc. No. M-4
Revision 0
Page No. 9 of 9

Client	WO/Job No. E40690	
Subject	Date 4-16-97	By CM KELLER
	Checked 5-28-97	By DA MOODY
Location	Revised	By

VENTILATION LOSSES FOR 500CFM IN 6" AND 12" DUCT DIAMETERS WERE DETERMINED IN CALCULATION M-1

6" $\Delta p = 1.19$ in wg/100'

12" $\Delta p = .04$ in wg/100'

TANK INLET LOSS:

$$\Delta p_{INLET} = 25'(1.19 \text{ in wg}/100') + 1'' \text{wg} + (23+15+73)(.04 \tfrac{\text{in wg}}{100'})$$

$$\Delta p_{INLET} = 1.34 \text{ in wg}$$

VENTILATION PLENUM LOSS:

$$\Delta p = (19+10+23+27+10+13+22)(1.19 \tfrac{\text{in wg}}{100'}) + (20')(.04 \tfrac{\text{in wg}}{100'})$$

$$\Delta p_{PLENUM} = 1.48 \text{ in wg}$$

TOTAL LOSS = 2.82 in wg OK

```
      *                    *******   **  *******   *******
     ***          **       **    **  **  **    **  **
    ** **        ******    **    **  **  **    **  **
   **   **   **  **  **  *****  *******  **  *******  *****
  *********  **  **  **  **  **  **       **  **       **
 **       **  **  **  **  **  **  **       **  **       **
**         **  *****   **   *****  **       **  **       *******
```

Pipe Stress Analysis and Design Program

Version: 4.60.03

Edition: Plus-DOS

Developed and Maintained by

Engineering Design Automation, Inc.
1600 Riviera Ave., Suite 300
Walnut Creek, CA 94596


```
*************************************************************
**                                                         **
**            AUTOPIPE SYSTEM DATA LISTING                 **
**                                                         **
*************************************************************
```

SYSTEM NAME : S-107

PROJECT ID : EXHAUSTER PIPING STRESS ANALYSIS
TANK S-107 / DWG: H-2-73186, REV-4

PREPARED BY : M. M. Ahmed
M. M. AHMED

CHECKED BY : H. P. Shrivastava
H.SHRIVASTAVA

PIPING CODE : B31.3

AMBIENT TEMP. (deg F) : 70.0

COMPONENT LIBRARY : AUTOPIPE

MATERIAL LIBRARY : AUTOB313

MODEL REVISION NUMBER : 5

POINT DATA LISTING

POINT NAME	TYPE	OFFSETS (ft) X	Y	Z	PIPE ID	DESCRIPTION
*** SEGMENT A						
A00	Run	0	0	0	12PIPE	
A01	Run	0	0	-0.50		
A02	Flex	0	0	-0.50		Wt= 137 lb , Ar= 121.0 sq.in Axial= 282.0 Tors= 14417.0 Y-Shear= 1665.0 Bend= 10.0 Z-Shear= 1665.0 Bend= 10.0
A03	Redu	0	0	-0.95		
A04	Run	0	0	-0.88	6PIPE	
A05	Run	0	0	-1.17		
A06	Run	0	0	-8.34		
A07	Bend	0	0	-0.75		Long Elbow, Radius = 9.00 inch Bend angle change = 90.00 deg Mid point at 50.00 percent SIF - In 2.27, Out = 1.89 Flex = 6.590
A08	Run	7.00	0	0		
A09	Run	3.00	0	0		
A10	Run	10.00	0	0		
A11	Run	1.00	0	0		
A12	Valv	4.25	0	0		Rating = 150, Weight = 212 lb Surface factor = 4.30, SIF = 1.00
A13	Run	1.00	0	0		
A14	Bend	0.75	0	0		Long Elbow, Radius = 9.00 inch Bend angle change = 90.00 deg Mid point at 50.00 percent SIF - In 1.80, Out = 1.50 Flex = 5.232
A15	Run	0	-1.13	0		
A16	Run	0	-1.00	0		

Total weight of empty pipes : 913 lb

COMPONENT DATA LISTING

POINT NAME	COORDINATE(ft) X	Y	Z	DATA TYPE	DESCRIPTION
*** SEGMENT A					
A00	0.00	0.00	0.00	ANCHOR	Rigid Thermal movements : None 2 mass point(s)
A01	0.00	0.00	-0.50		2 mass point(s)
				FLANGE	Weld neck SIF = 1.00 Rating = 150, Weight = 24 lb
A02	0.00	0.00	-1.00		2 mass point(s)
				FLANGE	Weld neck SIF = 1.00 Rating = 150, Weight = 24 lb
A03	0.00	0.00	-1.95		2 mass point(s)
				FLANGE	Weld neck SIF = 1.00 Rating = 150, Weight = 80 lb
A04	0.00	0.00	-2.83		2 mass point(s)
A05	0.00	0.00	-4.00	GUIDE	ID : A05 1, Connected to Ground Stiffness = RIGID Gap-down = 0.00, Above = 0.13 inch Gap-left = 0.13, Right = 0.13 inch Friction = 0.20 Gaps set Weightless 2 mass point(s)
A06	0.00	0.00	-12.34		2 mass point(s)
				FLANGE	Weld neck SIF = 1.00 Rating = 150, Weight = 24 lb
A07 N	0.00	0.00	-12.34		2 mass point(s)
A07	0.00	0.00	-13.09	TI	
A07 M	0.22	0.00	-12.87		2 mass point(s)
A07 F	0.75	0.00	-13.09		2 mass point(s)
A08	7.00	0.00	-13.09	GUIDE	ID : A08 1, Connected to Ground Stiffness = RIGID Gap-down = 0.00, Above = 0.13 inch Gap-left = 0.13, Right = 0.13 inch Friction = 0.20 Gaps set Weightless 2 mass point(s)
A09	10.00	0.00	-13.09		2 mass point(s)
				FLANGE	Weld neck SIF = 1.00 Rating = 150, Weight = 24 lb
				FLANGE	Weld neck SIF = 1.00 Rating = 150, Weight = 24 lb
A10	20.00	0.00	-13.09		2 mass point(s)
				FLANGE	Weld neck SIF = 1.00 Rating = 150, Weight = 24 lb
				FLANGE	Weld neck SIF = 1.00 Rating = 150, Weight = 24 lb
A11	21.00	0.00	-13.09	GUIDE	ID : A11 1, Connected to Ground Stiffness = RIGID Gap-down = 0.00, Above = 0.13 inch Gap-left = 0.13, Right = 0.13 inch

COMPONENT DATA LISTING

POINT NAME	COORDINATE(ft) X	Y	Z	DATA TYPE	DESCRIPTION
					Friction = 0.20
					Gaps set Weightless
					2 mass point(s)
A12	25.25	0.00	-13.09		2 mass point(s)
A13	26.25	0.00	-13.09		2 mass point(s)
A14 N	26.25	0.00	-13.09		2 mass point(s)
A14	27.00	0.00	-13.09	TI	
A14 M	26.78	-0.22	-13.09		2 mass point(s)
A14 F	27.00	-0.75	-13.09		2 mass point(s)
				FLANGE	Weld neck SIF = 1.00
					Rating = 150, Weight = 24 lb
A15	27.00	-1.13	-13.09		2 mass point(s)
				FLANGE	Weld neck SIF = 1.00
					Rating = 150, Weight = 24 lb
A16	27.00	-2.13	-13.09	ANCHOR	Rigid
					Thermal movements : None

Number of points in the system : 67

PIPE DATA LISTING

Pipe ID/ Material	Nom/ Sch	O.D. inch	Thickness(inch) W.Th.	Corr	Mill	Insu	Ling	Spec Grav	Weight(lb/ft) Pipe	Other	Total
12PIPE A312-TP304L	12 STD	12.750	0.375	0	0.05	2.00	0	0	50.72	4.51	55.23
6PIPE A312-TP304L	6 STD	6.625	0.280	0	0.04	2.00	0	0	19.42	2.63	22.05

M A T E R I A L D A T A L I S T I N G

Material Name	Pipe ID	Density lb/cu.ft	Pois. Ratio	Temper. deg F	Modulus E6 psi	Expans. in/100ft	Allow. psi
A312-TP304L	12PIPE	501.0	0.30	70.0	28.30		16700.0
				150.0		0.8985	16700.0
A312-TP304L	6PIPE	501.0	0.30	70.0	28.30		16700.0
				150.0		0.8985	16700.0

TEMPERATURE AND PRESSURE DATA

POINT NAME	CASE 1 PRESS. psi	CASE 1 TEMPER deg F	CASE 1 EXPAN. in/100ft	CASE 2 PRESS. psi	CASE 2 TEMPER deg F	CASE 2 EXPAN. in/100ft	CASE 3 PRESS. psi	CASE 3 TEMPER deg F	CASE 3 EXPAN. in/100ft
*** SEGMENT A									
A00	50.00	150	0.898						
A04	50.00	150	0.898						
A16	50.00	150	0.898						

A N A L Y S I S S U M M A R Y

Current model revision number : 5

```
Static - Date and Time of analysis ............ Apr 7, 1997   11:04 AM
         Model Revision Number ................ 5
         Number of load cases ................. 2
         Load cases analyzed .................. GR T1
         Gaps/Friction/Yielding considered ..... Yes
         Tolerance - Force, Displacement ...... 100.00 lb   0.0162 in
         Friction - Factor, tolerance ......... 1.00   0.10
         Hanger design run .................... No
         Cut short included ................... No
         Occasional load analysis type ........ Nonlinear
         Non-linear analysis summary file ..... S-107.LOG
         Base load cases for nonlinear analysis
                                                  GR = None
                                                  T1 = GR
         Weight of contents included .......... Yes
         Number of mass points per span ....... 2
         Pressure stiffening case ............. 0
         Water elevation for buoyancy loads .... Not considered

Modal  - Date and Time of analysis ............ Apr 7, 1997   11:05 AM
         Model Revision Number ................ 5
         Number of modes ...................... 18
         Cutoff frequency (Hz) ................ 100.0
         Weight of contents included .......... Yes
         Number of mass points per span ....... 2
         Pressure stiffening case ............. 0
         Water elevation for buoyancy loads .... Not considered

Response - Date and Time of analysis ........... Apr 7, 1997   11:05 AM
         Model Revision Number ................ 5
         Number of load cases ................. 1
         Load cases analyzed .................. R1
         Date and time of modal analysis ...... Apr 7, 1997   11:05 AM
         Number of modes ...................... 18
         Cutoff frequency (Hz) ................ 100.0
         Model revision of modal analysis ..... 5
         Weight of contents included .......... Yes
         Number of mass points per span ....... 2
         Pressure stiffening case ............. 0
         Water elevation for buoyancy loads .... Not considered
```


CODE COMPLIANCE COMBINATIONS

Combination	Category	Method	Load	Factor	Allowable	Remarks
GR + Max P	Sustain	Sum	Gravity	1.00	Automatic	Default
			Max Long	1.00		
Cold to T1	Expansion	Sum	Thermal 1	1.00	Automatic	Default
Sus. + R1	Occasion	Abs sum	Response 1	1.00	Automatic	Default
			Max Sus	1.00		
Max P	Hoop		Max Hoop	1.00	Automatic	Default

OTHER USER COMBINATIONS

Combination	Method	Load	Factor	Remarks
GR	Sum	Gravity	1.00	Default
T1	Sum	Thermal 1	1.00	Default
R1	Sum	Response 1	1.00	Default
GR+T1	Sum	Gravity	1.00	User
		Thermal 1	1.00	
GR+T1+SEIS	Abs sum	GR+T1	1.00	User
		Response 1	1.00	
TOTAL	Abs sum	GR+T1	1.00	User
		Response 1	1.00	

CODE COMPLIANCE

```
Y - Factor ............................ 0.40
Weld efficiency factor ................ 1.00
Range reduction factor ................ 1.00
Design Pressure Factor ................ 1.00
Minimum stress ratio used in reports... 0.00
Include corrosion in stress calcs. .... Y
Include torsion in code stress ........ N
Include axial force in code stress .... N
Longitudinal pressure calculation ..... PD/4t
Include rigorous pressure ............. Not analyzed
```

RESPONSE SPECTRUM LOAD CASES :

Number of load cases analysed : 1

Load case 1 - R1

Missing mass : Yes
ZPA : No

Combination method : SRSS

X- Spectrum : SC2&3
Multiplier : 1.00

SC2&3

Freq(Hz)	Grav( )	Freq(Hz)	Grav( )	Freq(Hz)	Grav( )
0.100	0.01	0.160	0.02	0.250	0.04
0.400	0.06	0.600	0.09	1.100	0.17
1.640	0.25	8.000	0.25	12.000	0.20
20.000	0.16	33.000	0.12	100.000	0.12

Y- Spectrum : SC2&3
Multiplier : 0.67

SC2&3

Freq(Hz)	Grav( )	Freq(Hz)	Grav( )	Freq(Hz)	Grav( )
0.100	0.01	0.160	0.02	0.250	0.04
0.400	0.06	0.600	0.09	1.100	0.17
1.640	0.25	8.000	0.25	12.000	0.20
20.000	0.16	33.000	0.12	100.000	0.12

Z- Spectrum : SC2&3
Multiplier : 1.00

SC2&3

Freq(Hz)	Grav( )	Freq(Hz)	Grav( )	Freq(Hz)	Grav( )
0.100	0.01	0.160	0.02	0.250	0.04
0.400	0.06	0.600	0.09	1.100	0.17
1.640	0.25	8.000	0.25	12.000	0.20
20.000	0.16	33.000	0.12	100.000	0.12

F R E Q U E N C I E S

Mode Number	Frequency (Rads/sec)	Frequency (Hertz)	Period (Sec)	Participation factors X	Y	Z
1	46.7622	7.4424	0.134	-0.006	-0.001	1.060
2	58.7763	9.3545	0.107	-0.005	0.000	0.228
3	70.2234	11.1764	0.089	-0.029	-0.373	-0.011
4	95.5185	15.2022	0.066	-0.002	0.000	0.088
5	115.7153	18.4167	0.054	0.412	-0.009	0.016
6	116.9916	18.6198	0.054	-0.015	-0.519	-0.005
7	199.5773	31.7637	0.031	1.501	-0.007	0.027
8	211.6753	33.6892	0.030	-0.182	0.083	0.234
9	217.1331	34.5578	0.029	-0.126	-0.179	0.109
10	219.3773	34.9150	0.029	0.517	-0.028	0.010
11	229.7706	36.5691	0.027	0.731	0.714	-0.035
12	275.3562	43.8243	0.023	-0.658	-0.072	0.760
13	284.6494	45.3034	0.022	-0.441	-0.238	-1.407
14	300.0677	47.7573	0.021	0.095	0.662	-0.408
15	514.3174	81.8562	0.012	-0.492	1.099	0.026
16	561.2496	89.3256	0.011	0.348	0.035	-0.225
17	592.2839	94.2649	0.011	-0.282	0.381	-0.058
18	612.2020	97.4350	0.010	-0.357	-0.070	-0.017

D I S P L A C E M E N T S

Point name	Load combination	TRANSLATIONS (in) X	Y	Z	ROTATIONS (deg) X	Y	Z
*** Segment A begin ***							
A00	GR	0.000	0.000	0.000	0.000	0.000	0.000
	T1	0.000	0.000	0.000	0.000	0.000	0.000
	R1	0.000	0.000	0.000	0.000	0.000	0.000
	GR+T1	0.000	0.000	0.000	0.000	0.000	0.000
	TOTAL	0.000	0.000	0.000	0.000	0.000	0.000
A01	GR	0.000	0.000	0.000	0.000	0.000	0.000
	T1	0.000	0.000	-0.004	0.000	0.000	0.000
	R1	0.000	0.000	0.000	0.000	0.000	0.000
	GR+T1	0.000	0.000	-0.004	0.000	0.000	0.000
	TOTAL	0.000	0.000	0.004	0.000	0.000	0.000
A02	GR	0.000	0.000	0.000	0.000	0.000	0.000
	T1	0.000	0.000	-0.009	0.000	0.000	0.000
	R1	0.000	0.000	0.000	0.000	0.000	0.000
	GR+T1	0.000	0.000	-0.009	0.000	0.000	0.000
	TOTAL	0.000	0.000	0.009	0.000	0.000	0.000
A03	GR	-0.001	-0.001	-0.001	0.003	0.000	0.014
	T1	-0.100	-0.002	0.070	0.004	0.069	-0.002
	R1	0.002	0.002	0.035	0.004	0.005	0.003
	GR+T1	-0.100	-0.002	0.069	0.007	0.069	0.012
	TOTAL	0.103	0.004	0.104	0.011	0.075	0.015
A04	GR	-0.001	0.000	-0.001	0.002	0.000	0.014
	T1	-0.112	-0.001	0.062	0.004	0.069	-0.002
	R1	0.001	0.001	0.035	0.004	0.005	0.003
	GR+T1	-0.113	-0.001	0.061	0.006	0.069	0.012
	TOTAL	0.114	0.002	0.096	0.011	0.075	0.015
A05	GR	-0.001	0.000	-0.001	-0.004	0.000	0.015
	T1	-0.129	0.000	0.051	0.004	0.069	-0.002
	R1	0.000	0.000	0.035	0.004	0.005	0.003
	GR+T1	-0.130	0.000	0.050	0.000	0.069	0.013
	TOTAL	0.130	0.000	0.086	0.005	0.074	0.016
A06	GR	-0.001	-0.030	-0.001	-0.020	0.000	0.023
	T1	-0.237	0.007	-0.023	0.003	0.049	-0.004
	R1	0.002	0.006	0.035	0.003	0.006	0.004
	GR+T1	-0.238	-0.024	-0.025	-0.016	0.050	0.019
	TOTAL	0.240	0.030	0.060	0.019	0.056	0.024

D I S P L A C E M E N T S

Point name	Load combination	TRANSLATIONS (in) X	Y	Z	ROTATIONS (deg) X	Y	Z
A07 N	GR	-0.001	-0.030	-0.001	-0.020	0.000	0.023
	T1	-0.237	0.007	-0.023	0.003	0.049	-0.004
	R1	0.002	0.006	0.035	0.003	0.006	0.004
	GR+T1	-0.238	-0.024	-0.025	-0.016	0.050	0.019
	TOTAL	0.240	0.030	0.060	0.019	0.056	0.024
A07 M	GR	-0.001	-0.031	-0.001	-0.017	0.000	0.024
	T1	-0.240	0.007	-0.030	0.003	0.033	-0.004
	R1	0.001	0.006	0.035	0.003	0.016	0.005
	GR+T1	-0.241	-0.025	-0.031	-0.014	0.033	0.021
	TOTAL	0.242	0.031	0.066	0.017	0.049	0.025
A07 F	GR	-0.001	-0.029	-0.001	-0.016	0.000	0.027
	T1	-0.236	0.006	-0.035	0.003	0.016	-0.004
	R1	0.001	0.006	0.033	0.002	0.025	0.005
	GR+T1	-0.237	-0.023	-0.036	-0.013	0.016	0.022
	TOTAL	0.238	0.029	0.068	0.016	0.041	0.027
A08	GR	-0.001	0.000	-0.001	-0.013	0.000	0.010
	T1	-0.180	0.000	-0.041	0.002	-0.003	-0.006
	R1	0.001	0.000	0.000	0.002	0.018	0.003
	GR+T1	-0.181	0.000	-0.042	-0.011	-0.003	0.004
	TOTAL	0.182	0.000	0.042	0.013	0.021	0.007
A09	GR	-0.001	0.001	-0.001	-0.011	0.000	-0.003
	T1	-0.153	-0.003	-0.037	0.001	-0.008	-0.005
	R1	0.001	0.001	0.007	0.002	0.006	0.002
	GR+T1	-0.154	-0.003	-0.038	-0.010	-0.008	-0.008
	TOTAL	0.155	0.004	0.046	0.012	0.015	0.010
A10	GR	-0.001	0.000	-0.001	-0.005	0.000	0.002
	T1	-0.063	-0.002	-0.013	-0.001	-0.012	0.010
	R1	0.001	0.000	0.001	0.002	0.005	0.002
	GR+T1	-0.065	-0.003	-0.014	-0.006	-0.012	0.012
	TOTAL	0.065	0.003	0.015	0.008	0.017	0.013
A11	GR	-0.001	0.000	-0.001	-0.005	0.000	-0.001
	T1	-0.054	0.000	-0.011	-0.001	-0.011	0.013
	R1	0.001	0.000	0.000	0.002	0.003	0.001
	GR+T1	-0.056	0.000	-0.011	-0.006	-0.011	0.012
	TOTAL	0.056	0.000	0.011	0.008	0.015	0.013
A12	GR	-0.001	-0.002	0.000	-0.002	-0.001	0.003
	T1	-0.016	0.014	-0.002	-0.002	-0.007	0.016
	R1	0.001	0.000	0.001	0.002	0.001	0.001
	GR+T1	-0.018	0.012	-0.003	-0.004	-0.008	0.019
	TOTAL	0.018	0.013	0.004	0.006	0.009	0.020

D I S P L A C E M E N T S

Point name	Load combination	TRANSLATIONS (in) X	Y	Z	ROTATIONS (deg) X	Y	Z
A13	GR	-0.001	-0.001	0.000	-0.002	-0.001	0.003
	T1	-0.007	0.018	-0.001	-0.002	-0.007	0.016
	R1	0.001	0.000	0.001	0.002	0.001	0.001
	GR+T1	-0.009	0.016	-0.001	-0.004	-0.008	0.019
	TOTAL	0.009	0.017	0.002	0.006	0.009	0.020
A14 N	GR	-0.001	-0.001	0.000	-0.002	-0.001	0.003
	T1	-0.007	0.018	-0.001	-0.002	-0.007	0.016
	R1	0.001	0.000	0.001	0.002	0.001	0.001
	GR+T1	-0.009	0.017	-0.001	-0.004	-0.008	0.019
	TOTAL	0.009	0.017	0.002	0.006	0.009	0.020
A14 M	GR	-0.001	0.000	0.000	-0.002	0.000	0.007
	T1	-0.002	0.017	0.000	-0.001	-0.004	0.007
	R1	0.001	0.000	0.000	0.002	0.001	0.002
	GR+T1	-0.003	0.017	0.000	-0.003	-0.004	0.014
	TOTAL	0.004	0.017	0.001	0.005	0.005	0.016
A14 F	GR	0.000	0.000	0.000	-0.001	0.000	0.002
	T1	0.000	0.012	0.000	0.000	-0.002	0.000
	R1	0.000	0.000	0.000	0.001	0.000	0.002
	GR+T1	0.000	0.012	0.000	-0.001	-0.002	0.002
	TOTAL	0.001	0.012	0.000	0.002	0.002	0.004
A15	GR	0.000	0.000	0.000	0.000	0.000	0.002
	T1	0.000	0.009	0.000	0.000	-0.002	0.000
	R1	0.000	0.000	0.000	0.001	0.000	0.002
	GR+T1	0.000	0.009	0.000	0.000	-0.001	0.001
	TOTAL	0.000	0.009	0.000	0.001	0.002	0.003
A16	GR	0.000	0.000	0.000	0.000	0.000	0.000
	T1	0.000	0.000	0.000	0.000	0.000	0.000
	R1	0.000	0.000	0.000	0.000	0.000	0.000
	GR+T1	0.000	0.000	0.000	0.000	0.000	0.000
	TOTAL	0.000	0.000	0.000	0.000	0.000	0.000

*** Segment A end ***

R E S T R A I N T R E A C T I O N S

Point name	Load combination	FORCES (lb) X	Y	Z	Result	MOMENTS (ft-lb) X	Y	Z	Result
A00	Anchor								
	GR	0	-309	0	309	-298	0	68	306
	T1	-15	0	7	17	0	23	-11	25
	R1	16	11	22	29	9	12	13	20
	GR+T1	-16	-309	7	310	-299	23	57	305
	TOTAL	31	320	29	323	308	36	70	318
A05	Guide								
	GR	0	-539	0	539	0	0	0	0
	T1	-76	2	30	81	0	0	0	0
	R1	40	25	0	47	0	0	0	0
	GR+T1	-76	-537	30	543	0	0	0	0
	TOTAL	116	562	30	574	0	0	0	0
A08	Guide								
	GR	0	-411	0	411	0	0	0	0
	T1	-86	-23	-19	91	0	0	0	0
	R1	0	32	140	144	0	0	0	0
	GR+T1	-86	-433	-19	442	0	0	0	0
	TOTAL	86	466	160	500	0	0	0	0
A11	Guide								
	GR	0	-404	0	404	0	0	0	0
	T1	-60	113	-12	129	0	0	0	0
	R1	0	32	85	91	0	0	0	0
	GR+T1	-60	-291	-12	298	0	0	0	0
	TOTAL	60	323	96	343	0	0	0	0
A16	Anchor								
	GR	0	-623	0	623	-41	4	160	166
	T1	190	-92	-6	211	-1	-113	-124	168
	R1	124	43	64	146	130	24	214	251
	GR+T1	190	-715	-6	740	-42	-109	36	122
	TOTAL	314	757	71	823	172	132	250	331

G L O B A L F O R C E S & M O M E N T S

Point name	Load combination	FORCES (lb) X	Y	Z	Result	MOMENTS (ft-lb) X	Y	Z	Result
*** Segment A begin ***									
A00	GR	0	309	0	309	298	0	-68	306
	T1	15	0	-7	17	0	-23	11	25
	R1	15	11	21	28	9	12	13	20
	GR+T1	16	309	-7	310	299	-23	-57	305
	TOTAL	31	320	29	323	308	36	70	318
A01 -	GR	0	281	0	281	151	0	-68	165
	T1	15	0	-7	17	0	-15	11	19
	R1	13	9	20	26	4	6	13	14
	GR+T1	16	282	-7	282	151	-15	-57	162
	TOTAL	29	291	27	294	155	21	70	172
A01 +	GR	0	257	0	257	151	0	-68	165
	T1	15	0	-7	17	0	-15	11	19
	R1	10	7	18	22	4	6	13	14
	GR+T1	16	258	-7	258	151	-15	-57	162
	TOTAL	26	265	25	267	155	21	70	172
A02 -	GR	0	230	0	230	29	0	-68	74
	T1	15	0	-7	17	0	-8	11	13
	R1	9	6	17	20	1	1	13	13
	GR+T1	16	230	-7	231	29	-8	-57	65
	TOTAL	24	236	24	239	30	9	70	77
A02 +	GR	0	69	0	69	29	0	-68	74
	T1	15	0	-7	17	0	-8	11	13
	R1	6	5	16	18	1	1	13	13
	GR+T1	16	69	-7	71	29	-8	-57	65
	TOTAL	22	74	23	81	30	9	70	77
A03 -	GR	0	-205	0	205	29	0	-68	74
	T1	15	0	-7	17	0	7	11	13
	R1	6	5	11	14	1	1	13	13
	GR+T1	16	-205	-7	206	29	7	-57	64
	TOTAL	22	210	18	212	30	8	70	76
A03 +	GR	0	-285	0	285	29	0	-68	74
	T1	15	0	-7	17	0	7	11	13
	R1	21	14	32	40	1	1	13	13
	GR+T1	16	-285	-7	286	29	7	-57	64
	TOTAL	36	299	39	303	30	8	70	76

G L O B A L F O R C E S & M O M E N T S

Point name	Load combination	FORCES (lb) X	Y	Z	Result	MOMENTS (ft-lb) X	Y	Z	Result
A04	GR	0	-329	0	329	301	0	-68	308
	T1	15	0	-7	17	0	21	11	23
	R1	27	17	39	51	14	21	13	28
	GR+T1	16	-329	-7	329	300	21	-57	306
	TOTAL	42	346	47	352	314	41	70	324
A05 -	GR	0	-355	0	355	701	0	-68	704
	T1	15	0	-7	17	-1	39	11	40
	R1	28	18	43	54	34	52	13	64
	GR+T1	16	-355	-7	355	700	39	-57	703
	TOTAL	43	373	50	379	734	91	70	743
A05 +	GR	0	184	0	184	701	0	-68	704
	T1	44	-2	-38	58	-1	39	11	40
	R1	31	9	50	59	34	52	13	64
	GR+T1	44	182	-37	191	700	39	-57	703
	TOTAL	75	191	87	223	734	91	70	743
A06 -	GR	0	0	0	0	-66	1	-68	95
	T1	44	-2	-38	58	12	408	11	408
	R1	32	8	75	82	13	243	13	244
	GR+T1	44	-2	-37	58	-55	409	-57	417
	TOTAL	76	9	112	136	67	653	70	660
A06 +	GR	0	-24	0	24	-66	1	-68	95
	T1	44	-2	-38	58	12	408	11	408
	R1	33	10	86	92	13	243	13	244
	GR+T1	44	-26	-37	63	-55	409	-57	417
	TOTAL	77	35	123	150	67	653	70	660
A07 N	GR	0	-24	0	24	-66	1	-68	95
	T1	44	-2	-38	58	12	408	11	408
	R1	33	10	86	93	13	244	13	244
	GR+T1	44	-26	-37	63	-55	409	-57	417
	TOTAL	78	35	124	150	67	653	70	660
A07 M	GR	0	-37	0	37	-51	1	-61	79
	T1	44	-2	-38	58	13	423	11	424
	R1	33	11	89	95	9	239	11	239
	GR+T1	44	-38	-37	70	-38	424	-50	429
	TOTAL	78	49	126	156	47	663	61	668
A07 F	GR	0	-50	0	50	-41	1	-37	56
	T1	44	-2	-38	58	13	413	12	414
	R1	35	13	95	102	8	198	8	198
	GR+T1	44	-51	-37	78	-28	414	-26	416
	TOTAL	79	64	133	167	36	612	33	614

S-107 EXHAUSTER PIPING STRESS ANALYSIS FLUOR DANIEL NORTHWEST, INC.
04/07/97 TANK S-107 / DWG: H-2-73186, REV-4 AutoPIPE+4.60 RESULT PAGE 11

GLOBAL FORCES & MOMENTS

Point name	Load combination	FORCES (lb) X	Y	Z	Result	MOMENTS (ft-lb) X	Y	Z	Result
A08 -	GR	0	-188	0	188	-41	2	705	707
	T1	44	-2	-38	58	13	179	21	180
	R1	38	15	103	111	8	425	80	432
	GR+T1	44	-189	-37	198	-28	181	727	749
	TOTAL	83	205	141	262	36	605	807	1010
A08 +	GR	0	223	0	223	-41	2	705	707
	T1	130	21	-18	133	13	179	21	180
	R1	40	21	39	60	8	425	80	432
	GR+T1	130	244	-18	277	-28	181	727	749
	TOTAL	170	265	57	320	36	605	807	1010
A09 -	GR	0	157	0	157	-41	2	135	141
	T1	130	21	-18	133	13	124	-42	132
	R1	43	19	39	60	8	317	58	323
	GR+T1	130	178	-18	221	-28	127	94	160
	TOTAL	173	197	56	268	36	444	151	471
A09 +	GR	0	109	0	109	-41	2	135	141
	T1	130	21	-18	133	13	124	-42	132
	R1	48	11	41	64	8	317	58	323
	GR+T1	130	130	-18	185	-28	127	94	160
	TOTAL	179	141	59	235	36	444	151	471
A10 -	GR	0	-112	0	112	-41	3	148	153
	T1	130	21	-18	133	13	-56	-251	258
	R1	58	16	47	77	8	120	29	124
	GR+T1	130	-91	-18	160	-28	-53	-104	120
	TOTAL	188	107	65	226	36	172	133	221
A10 +	GR	0	-160	0	160	-41	3	148	153
	T1	130	21	-18	133	13	-56	-251	258
	R1	64	22	49	83	8	120	29	124
	GR+T1	130	-139	-18	191	-28	-53	-104	120
	TOTAL	194	160	67	261	36	172	133	221
A11 -	GR	0	-182	0	182	-41	4	318	321
	T1	130	21	-18	133	13	-74	-272	283
	R1	65	23	49	85	8	167	46	174
	GR+T1	130	-161	-18	208	-28	-70	46	89
	TOTAL	195	183	67	276	36	238	92	258
A11 +	GR	0	223	0	223	-41	4	318	321
	T1	190	-92	-6	211	13	-74	-272	283
	R1	67	18	37	78	8	167	46	174
	GR+T1	190	131	-6	231	-28	-70	46	89
	TOTAL	257	149	44	300	36	238	92	258

S-107 EXHAUSTER PIPING STRESS ANALYSIS FLUOR DANIEL NORTHWEST, INC.
04/07/97 TANK S-107 / DWG: H-2-73186, REV-4 AutoPIPE+4.60 RESULT PAGE 12

GLOBAL FORCES & MOMENTS

Point name	Load combination	FORCES (lb) X	Y	Z	Result	MOMENTS (ft-lb) X	Y	Z	Result
A12	GR	0	129	0	129	-41	4	-430	432
	T1	190	-92	-6	211	13	-102	119	157
	R1	80	13	31	87	8	57	61	84
	GR+T1	190	37	-6	194	-28	-97	-311	327
	TOTAL	270	50	38	277	36	155	372	404
A13	GR	0	-518	0	518	-41	4	-236	239
	T1	190	-92	-6	211	13	-108	212	238
	R1	120	39	60	140	8	29	54	62
	GR+T1	190	-610	-6	639	-28	-104	-24	110
	TOTAL	310	649	67	722	36	133	79	159
A14 N	GR	0	-518	0	518	-41	4	-235	238
	T1	190	-92	-6	211	13	-108	212	238
	R1	120	39	61	140	8	29	54	62
	GR+T1	190	-610	-6	639	-28	-104	-23	110
	TOTAL	310	649	67	723	36	133	77	158
A14 M	GR	0	-531	0	531	-41	4	42	59
	T1	190	-92	-6	211	12	-111	219	246
	R1	121	39	62	142	11	15	24	30
	GR+T1	190	-623	-6	652	-30	-107	261	284
	TOTAL	311	663	68	735	40	122	285	313
A14 F-	GR	0	-544	0	544	-41	4	160	166
	T1	190	-92	-6	211	8	-113	138	179
	R1	122	40	62	142	42	24	45	66
	GR+T1	190	-636	-6	664	-33	-109	299	320
	TOTAL	312	676	68	748	75	132	344	376
A14 F+	GR	0	-568	0	568	-41	4	160	166
	T1	190	-92	-6	211	8	-113	138	179
	R1	123	41	63	144	42	24	45	66
	GR+T1	190	-660	-6	687	-33	-109	299	320
	TOTAL	313	701	69	771	75	132	344	376
A15 -	GR	0	-576	0	576	-41	4	160	166
	T1	190	-92	-6	211	6	-113	66	131
	R1	123	41	63	144	66	24	90	114
	GR+T1	190	-669	-6	695	-35	-109	227	254
	TOTAL	313	709	70	779	101	132	317	358
A15 +	GR	0	-600	0	600	-41	4	160	166
	T1	190	-92	-6	211	6	-113	66	131
	R1	124	42	64	146	66	24	90	114
	GR+T1	190	-693	-6	718	-35	-109	227	254
	TOTAL	314	735	70	802	101	132	317	358

S-107 EXHAUSTER PIPING STRESS ANALYSIS FLUOR DANIEL NORTHWEST, INC.
04/07/97 TANK S-107 / DWG: H-2-73186, REV-4 AutoPIPE+4.60 RESULT PAGE 13

G L O B A L F O R C E S & M O M E N T S

Point name	Load combination	FORCES (lb) X	Y	Z	Result	MOMENTS (ft-lb) X	Y	Z	Result
A16	GR	0	-623	0	623	-41	4	160	166
	T1	190	-92	-6	211	-1	-113	-124	168
	R1	124	42	64	146	130	24	214	251
	GR+T1	190	-715	-6	740	-42	-109	36	122
	TOTAL	314	757	71	823	172	132	250	331

*** Segment A end ***

S-107 EXHAUSTER PIPING STRESS ANALYSIS FLUOR DANIEL NORTHWEST, INC.
04/07/97 TANK S-107 / DWG: H-2-73186, REV-4 AutoPIPE+4.60 RESULT PAGE 14

ASME B31.3c (1992) CODE COMPLIANCE

Point name	Load combination	(Moments in ft-lb) In-Pl. Moment	Out-Pl. Moment	Torsion Moment	S.I.F In	S.I.F Out	Eq. no.	(Stress in psi) Load type	Code Stress	Code Allow.
*** Segment A begin ***										
A00	Max P						(3a)	HOOP	952	16700
	GR + Max P	298	0		1.00	1.00	(18)	SUST	507	16700
	Cold to T1	0	23	11	1.00	1.00	(17)	DISP	7	25050
	Sus. + R1	307	13		1.00	1.00	(18)	OCC	511	22211
A01	Max P						(3a)	HOOP	952	16700
	GR + Max P	151	0		1.00	1.00	(18)	SUST	466	16700
	Cold to T1	0	15	11	1.00	1.00	(17)	DISP	5	25050
	Sus. + R1	155	6		1.00	1.00	(18)	OCC	468	22211
A02	Max P						(3a)	HOOP	952	16700
	GR + Max P	29	0		1.00	1.00	(18)	SUST	433	16700
	Cold to T1	0	8	11	1.00	1.00	(17)	DISP	4	25050
	Sus. + R1	30	1		1.00	1.00	(18)	OCC	433	22211
A03	Max P						(3a)	HOOP	952	16700
	GR + Max P	29	0		1.00	1.00	(18)	SUST	433	16700
	Cold to T1	0	7	11	1.00	1.00	(17)	DISP	4	25050
	Sus. + R1	30	1		1.00	1.00	(18)	OCC	433	22211
A04	Max P						(3a)	HOOP	656	16700
	GR + Max P	301	0		1.00	1.00	(18)	SUST	720	16700
	Cold to T1	0	21	11	1.00	1.00	(17)	DISP	33	25050
	Sus. + R1	314	21		1.00	1.00	(18)	OCC	755	22211
A05	Max P						(3a)	HOOP	656	16700
	GR + Max P	701	0		1.00	1.00	(18)	SUST	1286	16700
	Cold to T1	1	39	11	1.00	1.00	(17)	DISP	57	25050
	Sus. + R1	735	52		1.00	1.00	(18)	OCC	1374	22211
A06	Max P						(3a)	HOOP	656	16700
	GR + Max P	66	1		1.00	1.00	(18)	SUST	390	16700
	Cold to T1	12	408	11	1.00	1.00	(17)	DISP	577	25050
	Sus. + R1	79	245		1.00	1.00	(18)	OCC	734	22211
A07 N-	Max P						(3a)	HOOP	656	16700
	GR + Max P	66	1		1.00	1.00	(18)	SUST	390	16700
	Cold to T1	12	408	11	1.00	1.00	(17)	DISP	577	25050
	Sus. + R1	79	245		1.00	1.00	(18)	OCC	734	22211
A07 N+	Max P						(3a)	HOOP	656	16700
	GR + Max P	1	67		2.27	1.89	(18)	SUST	473	16700
	Cold to T1	408	12	11	2.27	1.89	(17)	DISP	1306	25050
	Sus. + R1	245	79		2.27	1.89	(18)	OCC	1253	22211

S-107 EXHAUSTER PIPING STRESS ANALYSIS FLUOR DANIEL NORTHWEST, INC.
04/07/97 TANK S-107 / DWG: H-2-73186, REV-4 AutoPIPE+4.60 RESULT PAGE 15

ASME B31.3c (1992) CODE COMPLIANCE

Point name	Load combination	(Moments in ft-lb) In-Pl. Moment	Out-Pl. Moment	Torsion Moment	S.I.F In	S.I.F Out	Eq. no.	Load type	(Stress in psi) Code Stress	Code Allow.
A07 M	Max P						(3a)	HOOP	656	16700
	GR + Max P	1	79		2.27	1.89	(18)	SUST	505	16700
	Cold to T1	423	17	1	2.27	1.89	(17)	DISP	1355	25050
	Sus. + R1	240	92		2.27	1.89	(18)	OCC	1271	22211
A07 F-	Max P						(3a)	HOOP	656	16700
	GR + Max P	1	38		2.27	1.89	(18)	SUST	396	16700
	Cold to T1	413	12	13	2.27	1.89	(17)	DISP	1323	25050
	Sus. + R1	199	45		2.27	1.89	(18)	OCC	1029	22211
A07 F+	Max P						(3a)	HOOP	656	16700
	GR + Max P	37	1		1.00	1.00	(18)	SUST	349	16700
	Cold to T1	12	413	13	1.00	1.00	(17)	DISP	584	25050
	Sus. + R1	45	199		1.00	1.00	(18)	OCC	628	22211
A08	Max P						(3a)	HOOP	656	16700
	GR + Max P	705	2		1.00	1.00	(18)	SUST	1292	16700
	Cold to T1	21	179	13	1.00	1.00	(17)	DISP	255	25050
	Sus. + R1	786	427		1.00	1.00	(18)	OCC	1903	22211
A09	Max P						(3a)	HOOP	656	16700
	GR + Max P	135	2		1.00	1.00	(18)	SUST	487	16700
	Cold to T1	42	124	13	1.00	1.00	(17)	DISP	186	25050
	Sus. + R1	193	320		1.00	1.00	(18)	OCC	942	22211
A10	Max P						(3a)	HOOP	656	16700
	GR + Max P	148	3		1.00	1.00	(18)	SUST	504	16700
	Cold to T1	251	56	13	1.00	1.00	(17)	DISP	364	25050
	Sus. + R1	177	123		1.00	1.00	(18)	OCC	678	22211
A11	Max P						(3a)	HOOP	656	16700
	GR + Max P	318	4		1.00	1.00	(18)	SUST	745	16700
	Cold to T1	272	74	13	1.00	1.00	(17)	DISP	399	25050
	Sus. + R1	364	171		1.00	1.00	(18)	OCC	990	22211
A12	Max P						(3a)	HOOP	656	16700
	GR + Max P	430	4		1.00	1.00	(18)	SUST	903	16700
	Cold to T1	119	102	13	1.00	1.00	(17)	DISP	222	25050
	Sus. + R1	491	61		1.00	1.00	(18)	OCC	1021	22211
A13	Max P						(3a)	HOOP	656	16700
	GR + Max P	236	4		1.00	1.00	(18)	SUST	629	16700
	Cold to T1	212	108	13	1.00	1.00	(17)	DISP	336	25050
	Sus. + R1	290	33		1.00	1.00	(18)	OCC	716	22211
A14 N-	Max P						(3a)	HOOP	656	16700
	GR + Max P	235	4		1.00	1.00	(18)	SUST	627	16700
	Cold to T1	212	108	13	1.00	1.00	(17)	DISP	336	25050
	Sus. + R1	289	33		1.00	1.00	(18)	OCC	714	22211

S-107 EXHAUSTER PIPING STRESS ANALYSIS FLUOR DANIEL NORTHWEST, INC.
04/07/97 TANK S-107 / DWG: H-2-73186, REV-4 AutoPIPE+4.60 RESULT PAGE 16

ASME B31.3c (1992) CODE COMPLIANCE

Point name	Load combination	(Moments in ft-lb) In-Pl. Moment	Out-Pl. Moment	Torsion Moment	S.I.F In	S.I.F Out	Eq. no.	Load type	(Stress in psi) Code Stress	Code Allow.
A14 N+	Max P						(3a)	HOOP	656	16700
	GR + Max P	235	4		1.80	1.50	(18)	SUST	892	16700
	Cold to T1	212	108	13	1.80	1.50	(17)	DISP	585	25050
	Sus. + R1	289	33		1.80	1.50	(18)	OCC	1043	22211
A14 M	Max P						(3a)	HOOP	656	16700
	GR + Max P	42	26		1.80	1.50	(18)	SUST	417	16700
	Cold to T1	219	71	87	1.80	1.50	(17)	DISP	589	25050
	Sus. + R1	66	40		1.80	1.50	(18)	OCC	484	22211
A14 F-	Max P						(3a)	HOOP	656	16700
	GR + Max P	160	41		1.80	1.50	(18)	SUST	713	16700
	Cold to T1	138	8	113	1.80	1.50	(17)	DISP	387	25050
	Sus. + R1	205	83		1.80	1.50	(18)	OCC	857	22211
A14 F+	Max P						(3a)	HOOP	656	16700
	GR + Max P	41	160		1.00	1.00	(18)	SUST	530	16700
	Cold to T1	8	138	113	1.00	1.00	(17)	DISP	253	25050
	Sus. + R1	83	205		1.00	1.00	(18)	OCC	617	22211
A15	Max P						(3a)	HOOP	656	16700
	GR + Max P	41	160		1.00	1.00	(18)	SUST	530	16700
	Cold to T1	6	66	113	1.00	1.00	(17)	DISP	185	25050
	Sus. + R1	107	251		1.00	1.00	(18)	OCC	688	22211
A16	Max P						(3a)	HOOP	656	16700
	GR + Max P	41	160		1.00	1.00	(18)	SUST	530	16700
	Cold to T1	1	124	113	1.00	1.00	(17)	DISP	237	25050
	Sus. + R1	171	374		1.00	1.00	(18)	OCC	883	22211

*** Segment A end ***

S Y S T E M S U M M A R Y

Maximum displacements (in)

Maximum X :	0.242	Point : A07 M	Load Comb.: TOTAL
Maximum Y :	-0.031	Point : A07 M	Load Comb.: GR
Maximum Z :	0.104	Point : A03	Load Comb.: TOTAL
Max. total:	0.253	Point : A07 M	Load Comb.: TOTAL

Maximum rotations (deg)

Maximum X :	-0.020	Point : A06	Load Comb.: GR
Maximum Y :	0.075	Point : A03	Load Comb.: TOTAL
Maximum Z :	0.027	Point : A07 F	Load Comb.: TOTAL
Max. total:	0.077	Point : A03	Load Comb.: TOTAL

Maximum restraint forces(lb)

Maximum X :	314	Point : A16	Load Comb.: TOTAL
Maximum Y :	757	Point : A16	Load Comb.: TOTAL
Maximum Z :	160	Point : A08	Load Comb.: TOTAL
Max. total:	823	Point : A16	Load Comb.: TOTAL

Maximum restraint moments(ft-lb)

Maximum X :	308	Point : A00	Load Comb.: TOTAL
Maximum Y :	132	Point : A16	Load Comb.: TOTAL
Maximum Z :	250	Point : A16	Load Comb.: TOTAL
Max. total:	331	Point : A16	Load Comb.: TOTAL

S Y S T E M S U M M A R Y

Maximum pipe forces (lb)

Maximum X :	314	Point : A16	Load Comb.: TOTAL
Maximum Y :	757	Point : A16	Load Comb.: TOTAL
Maximum Z :	141	Point : A08	Load Comb.: TOTAL
Max. total:	823	Point : A16	Load Comb.: TOTAL

Maximum pipe moments (ft-lb)

Maximum X :	734	Point : A05	Load Comb.: TOTAL
Maximum Y :	663	Point : A07 M	Load Comb.: TOTAL
Maximum Z :	807	Point : A08	Load Comb.: TOTAL
Max. total:	1010	Point : A08	Load Comb.: TOTAL

S Y S T E M S U M M A R Y

Maximum sustained stress

Point	: A08
Stress psi	: 1292
Allowable psi	: 16700
Ratio	: 0.08
Load combination	: GR + Max P

Maximum displacement stress

Point	: A07 M
Stress psi	: 1355
Allowable psi	: 25050
Ratio	: 0.05
Load combination	: Cold to T1

Maximum occasional stress

Point	: A08
Stress psi	: 1903
Allowable psi	: 22211
Ratio	: 0.09
Load combination	: Sus. + R1

Maximum hoop stress

Point	: A00
Stress psi	: 952
Allowable psi	: 16700
Ratio	: 0.06
Load combination	: Max P

Maximum sustained stress ratio

Point	: A08
Stress psi	: 1292
Allowable psi	: 16700
Ratio	: 0.08
Load combination	: GR + Max P

Maximum displacement stress ratio

Point	: A07 M
Stress psi	: 1355
Allowable psi	: 25050
Ratio	: 0.05
Load combination	: Cold to T1

S Y S T E M S U M M A R Y

Maximum occasional stress ratio

Point	: A08
Stress psi	: 1903
Allowable psi	: 22211
Ratio	: 0.09
Load combination	: Sus. + R1

Maximum hoop stress ratio

Point	: A00
Stress psi	: 952
Allowable psi	: 16700
Ratio	: 0.06
Load combination	: Max P

* * * The system satisfies ASME B31.3 code requirements * * *
* * * for the selected options * * *

APPENDIX E: DESIGN CALCULATIONS FOR TANKS S-101/102 INSTALLATION

Fluor Daniel Northwest, Inc.	CALCULATION IDENTIFICATION AND INDEX	Page 1 of 10 Date May 7, 1997

This sheet shows the status and description of the attached Design Analysis sheets.

Discipline Mechanical WO/Job No. E40690 Calculation No. M-5

Project No. & Name 241-S-101/102 1000 CFM Exhauster Installation

Calculation Item

These calculations apply to:

Dwg. No. ECN 618795 Rev. No.

Dwg. No. Rev. No.

Other (Study, CDR) Rev. No.

The status of these calculations is:

[] Preliminary Calculations

[X] Final Calculations

[] Check Calculations (On Calculation Dated)

[] Void Calculation (Reason Voided)

Incorporated in Final Drawings? [] Yes [X] No

This calculation verified by independent "check" calculations? [] Yes [] No

Original and Revised Calculation Approvals:

	Rev. 0 Signature/Date	Rev. 1 Signature/Date	Rev. 2 Signature/Date
Originator	Craig M. Kelly 5/29/97		
Checked by	D A Woods 5/29/97		
Approved by	R. B. [illegible] 5/29/97		
Checked Against Approved Vendor Data			

INDEX

Design Analysis Page No.	Description
3	Analysis of piping and supports
3	Analysis of tank inlet HEPA filter installation
3	Analysis of exhauster inlet
4	Analysis of expansion joints
7	Determination of ventilation pressure losses
11	Attachments
	Autopipe piping analysis results

Fluor Daniel Northwest, Inc.

Calc. No. M-5
Revision 0
Page No. 2 of 10

DESIGN ANALYSIS

Client LMHC
Subject S-101/102 Exhauster Installation
Location 241-S-101/102

WO/Job No. E40690
Date 5-7-97 By C. M. Keller
Checked 5-28-97 By D. A. Moody
Revised By

OBJECTIVE:

Perform analysis of exhauster and HEPA filter installation on waste tanks 241-S-101/102 to verify stresses are within acceptable values and to determine expected pressure drop in the ventilation ducting.

CRITERIA:

Ventilation and condensate piping are considered safety significant/safety class 2. Design loads for analysis are specified in *Design Loads for Facilities* GC-LOAD-01, Rev 1. Piping is analyzed using criteria specified in the ASME B31.3 *Process Piping Code*.

ASSUMPTIONS/GIVENS:

Piping stresses and support loads used in the analysis were determined using Autopipe and are provided in the Attachments section. Analysis results for comparable installation designs have been applied where possible. These other installations were analyzed in calculations M-1 through M-4 of the same Job Number.

CALCULATION METHOD:

Hand calculations and Autopipe analysis have been used to verify adequacy of the design.

REFERENCES:

1) 1993 ASHRAE Handbook Fundamentals, American Society of Heating, Refrigeration and Air-Conditioning Engineers, Inc.

KAISER ENGINEERS
HANFORD

DESIGN ANALYSIS

Calc. No. M-5
Revision 0
Page No. 3 of 10

Client	WO/Job No. E40690	
Subject	Date 5-7-97	By CM KELLER
	Checked 5-28-97	By DA MOODY
Location	Revised	By

ANALYSIS OF THE VENTILATION PIPING WAS PERFORMED USING AUTOPIPE. THE ANALYSIS DETERMINED THAT PIPING STRESSES WERE WITHIN ALLOWABLES PER ASME B31.3. RESULTS OF THE AUTOPIPE ANALYSIS IS CONTAINED IN THE ATTACHMENTS SECTION.

THE TANK INLET HEPA FILTER INSTALLATION DESIGN FOR TANKS S-101 AND S-102 IS THE SAME AS THAT WHICH WAS ANALYZED IN CALCULATION M-1. ANALYSIS OF THAT FILTER INSTALLATION DESIGN PROVIDED SATISFACTORY RESULTS.

REACTIONS ON THE EXHAUSTER INLET ARE LESS THEN ANALYZED IN CALCULATION M-4, WITH THE EXCEPTION OF M_z WHICH IS ONLY SLIGHTLY GREATER. STRESS ANALYSIS OF THE EXHAUSTER INLET WILL NOT BE PERFORMED BASED ON SATISFACTORY RESULTS IN THE PREVIOUS ANALYSIS WITH A SIGNIFICANT MARGIN OF SAFETY.

REACTIONS ON THE PIPING SUPPORTS WERE DETERMINED IN THE AUTOPIPE ANALYSIS. SUPPORT REACTIONS WERE LESS THAN ANALYZED IN CALCULATION M-2, WHICH JUSTIFIES NOT RE-ANALYZING THE SUPPORTS FOR THIS INSTALLATION. SUPPORT DESIGNS ARE NEARLY IDENTICAL.

KAISER ENGINEERS
HANFORD

DESIGN ANALYSIS

Calc. No. M-5
Revision 0
Page No. 4 of 10

Client	WO/Job No. E40690	
Subject	Date 5-7-97	By CM KELLER
	Checked 5-28-97	By DA MOODY
Location	Revised	By

WIND LOADING AND MISSILE IMPACT HAZARDS HAVE BEEN SATISFACTORILY ANALYZED IN CALCULATION M-2, FURTHER ANALYSIS FOR THIS INSTALLATION IS NOT JUSTIFIED.

CHECK DISPLACEMENTS AT EXPANSION JOINT LOCATIONS:

EXHAUSTER INLET

EXP. JOINT - PATHWAY 12CSFF508C-M1

ALLOWABLE DISPLACEMENTS:

AXIAL	3.28"
LATERAL	.55"
ANGULAR	10°
TORSIONAL	.173°

ACTUAL DISPLACEMENTS AT POINT B02

TRANSLATIONS	X .022"	(LATERAL)	OK
	Y .015"	(LATERAL)	OK
	Z .046"	(AXIAL)	OK
ROTATIONS	X .024°	(ANGULAR)	OK
	Y .045°	(ANGULAR)	OK
	Z .020°	(TORSIONAL)	OK

∴ ACTUAL DISPLACEMENTS FOR EXPANSION JOINT AT EXHAUSTER INLET ARE WITHIN ALLOWABLES.

KAISER ENGINEERS HANFORD

DESIGN ANALYSIS

Calc. No. M-5
Revision 0
Page No. 5 of 10

Client	WO/Job No. E40690		
Subject	Date 5-7-97	By CM KELLER	
	Checked 5-28-97	By DA MOODY	
Location	Revised	By	

TANK S-102 CONNECTION

EXP. JOINT PATHWAY 6CSFF5012C-M1

ALLOWABLE DISPLACEMENTS AXIAL 2.46"
LATERAL .84"
ANGULAR 10°
TORSIONAL .022°

ACTUAL DISPLACEMENTS AT POINT A05

TRANSLATION	X	.535"	(AXIAL)	OK
	Y	.016"	(LATERAL)	OK
	Z	.030"	(LATERAL)	OK
ROTATIONS	X	.017°	(TORSIONAL)	OK
	Y	.044°	(ANGULAR)	OK
	Z	.271°	(ANGULAR)	OK

∴ ACTUAL DISPLACEMENTS FOR EXPANSION JOINT AT TANK S-102 CONNECTION ARE WITHIN ALLOWABLES.

TANK S-101 CONNECTION

EXP. JOINT IS SAME AS S-102 CONNECTION

ACTUAL DISPLACEMENTS AT POINT A22

TRANSLATION	X	.333"	(AXIAL)	OK
	Y	.632"	(LATERAL)	OK
	Z	.125"	(LATERAL	OK
ROTATIONS	X	.017°	(TORSIONAL)	OK
	Y	.044°	(ANGULAR)	OK
	Z	.271°	(ANGULAR)	OK

KAISER ENGINEERS
HANFORD

Calc. No. M-5
Revision 0
Page No. 6 of 10

DESIGN ANALYSIS

Client	WO/Job No. E40690	
Subject	Date 5-7-97	By CM KELLER
	Checked 5-28-97	By DA MOODY
Location	Revised	By

DISPLACEMENTS FOR THE EXPANSION JOINT AT TANK S-101 CONNECTION ARE WITHIN ALLOWABLES AS ANALYZED. FOLLOWING COMPLETION OF THE AUTOPIPE ANALYSIS AN ADDITIONAL SUPPORT WAS ADDED TO REDUCE VERTICAL DISPLACEMENTS. ACTUAL VERTICAL DISPLACEMENTS ARE GOING TO BE LESS AND ARE EXPECTED TO BE SIMILAR TO VALUES FOR THE TANK S-102 CONNECTION. THE ADDED SUPPORT HAS NO OTHER SIGNIFICANT IMPACT ON THE ANALYSIS RESULTS.

KAISER ENGINEERS
HANFORD

DESIGN ANALYSIS

Calc. No. M-5
Revision 0
Page No. 7 of 10

Client	WO/Job No. E40690	
Subject	Date 5-7-97	By CM KELLER
	Checked 5-28-97	By DA MOODY
Location	Revised	By

DETERMINE VENTILATION PRESSURE DROP FROM ATMOSPHERE TO EXHAUSTER INLET. ASSUME PRESSURE DROP OF 1" W.G. ACROSS TANK INLET HEPA FILTER. USE FLOW RATE OF 500 CFM PER TANK. USE SATURATED AIR AT 140°F AS THE MEDIUM TO BE EXHAUSTED. CONSIDER THE FOLLOWING LOSSES.

A) LOSS FROM ATMOSPHERE TO TANK DOME SPACE:

$\Delta P_{INLET} = 1.34$ in WG ref Calculation M-4

B) LOSS FROM TANK DOME SPACE TO 6" PLENUM:

THE TANK IS EXHAUSTED THROUGH A ϕ 24" OPENING INTO A 3'x6' CONDENSOR PIT. LOSSES FOR SUCH LARGE OPENINGS ARE NEGLIGIBLE FOR THE 500 CFM FLOW RATES AND WILL THEREFORE BE NEGLECTED.

C) LOSS IN ϕ6" PLENUM FROM TANK S-101 TO ϕ12" TEE:

ENTRANCE LOSS	Le = 19'
6" LR ELBOW	Le = 10'
6" BFLY VALVE	Le = 23' est
6" PIPE, 27' LENGTH	L = 27'
6"x12" EXPANSION	Le = 22'
TOTAL	Le = 101'

KAISER ENGINEERS
HANFORD

DESIGN ANALYSIS

Calc. No. M-5
Revision 0
Page No. 8 of 10

Client	WO/Job No. E40690	
Subject	Date 5-7-97	By CM KELLER
	Checked 5-28-97	By DA MOODY
Location	Revised	By

D) LOSS IN Ø6" PLENUM FROM TANK S-102 TO Ø12" Tee:

LOSS IS SAME AS TANK S-101 WITH ADDITIONAL 48' OF LENGTH.

$L_e = 149'$

E) LOSS FROM Ø12" TEE ENTRANCE TO EXHAUSTER:

Ø12" SIDE OUTLET TEE	$L_e = 60'$	(500 CFM)
Ø12" PIPE	$L = 10'$	(1000 CFM)
Ø12" EXPANSION JOINT	$L_e = 20'$ EA	(1000 CFM)

DETERMINE PRESSURE DROP FOR FLOWRATES AND DUCT SIZES:

BASIC PRESSURE LOSS FOR A FLOWRATE OF 500 CFM IN A Ø6" DUCT IS:

$\Delta p = 1.19$ in WG./100' reference CALCULATION M-1

FOR 500 CFM IN A Ø12" DUCT:

$\Delta p = .04$ in W.G./100' " "

Pressure LOSS FOR A FLOWRATE OF 1000 CFM IN A Ø12" DUCT HAS NOT PREVIOUSLY BEEN DETERMINED.

$$\Delta p = f\left(\frac{12L}{D}\right)\rho\left(\frac{V}{1097}\right)^2$$ ref 1 pg 32.4

where, Δp = Pressure loss (in W.G.)
f = friction factor
L = DUCT LENGTH (ft)
D = DUCT DIAMETER (in)
V = VELOCITY (fpm)
ρ = DENSITY (lb/ft³)

KAISER ENGINEERS
HANFORD

DESIGN ANALYSIS

Calc. No. M-5
Revision 0
Page No. 9 of 10

Client	WO/Job No. E40690		
Subject	Date 5-7-97	By CM KELLER	
	Checked 5-28-97	By DA MOODY	
Location	Revised	By	

FOR SATURATED AIR @ 140°F,

$\rho = .0613\ lb/ft^3$ reference CALCULATION M-1

VELOCITY $V = \dfrac{1000\ ft^3/min}{\pi/4\ (1ft)^2} = 1273\ ft/min$

DETERMINE FRICTION FACTOR f:

$Re = \dfrac{VD}{\nu}$ $\nu = 2.12E-4\ \dfrac{ft^2}{s}$ ref: CALC M-1

$Re = \dfrac{(1273\ ft/min)(1ft)}{(2.12E-4\ ft^2/s)(\frac{60sec}{min})} = 1.00E5$

Relative roughness $\epsilon/D = \dfrac{.00015}{1'} = .00015$ (STEEL DUCT)

$f = .019$ FROM MOODY DIAGRAM

$\Delta p = .019\left(\dfrac{12.100'}{12}\right)(.0613\ lb/ft^3)\left(\dfrac{1273\ fpm}{1097}\right)^2$

$\Delta p = .157$ inW.G./100' for 1000CFM IN ϕ12" DUCT

KAISER ENGINEERS
HANFORD

DESIGN ANALYSIS

Calc. No. M-5
Revision 0
Page No. 10 of 10

Client	WO/Job No. E40690		
Subject	Date 5-7-97	By CM KELLER	
	Checked 5-28-97	By DA MOODY	
Location	Revised	By	

TOTAL PRESSURE LOSS FROM ATMOSPHERE TO EXHAUSTER INLET FOR TANK S-101 IS:

$$\Delta p = 1.34 \text{ in WG} + (101')(1.19 \text{ in WG}/100') + (60')(.04 \text{ in WG}/100') + (30')(.157 \text{ in WG}/100')$$

$$\Delta p_{S-101} = 2.61 \text{ in WG.}$$

PRESSURE LOSS FOR TANK S-102 IS:

$$\Delta p = 1.34 + (149')(1.19/100') + (60')(.04/100') + (30')(.157/100')$$

$$\Delta p_{S-102} = 3.18 \text{ in W.G.}$$

DIFFERENCE BETWEEN TANKS IS .57 in W.G. VENTILATION BALANCING BETWEEN TANKS SHOULD NOT BE A PROBLEM.

```
     *                        *******   **  *******   *******
    ***            **         **   **  **  **    **  **
   ** **          ******      **   **  **  **    **  **
  **   **   **   **  **  *****  *******  **  *******  *****
 **********  **  **  **  **  **  **       **  **       **
**        **  **  **  **  **  **  **       **  **       **
**        **  *****   **   *****  **       **  **       *******
```

Pipe Stress Analysis and Design Program

Version: 4.60.03

Edition: Plus-DOS

Developed and Maintained by

Engineering Design Automation, Inc.
1600 Riviera Ave., Suite 300
Walnut Creek, CA 94596


```
**************************************************************
**                                                          **
**            AUTOPIPE SYSTEM DATA LISTING                  **
**                                                          **
**************************************************************
```

SYSTEM NAME : S101

PROJECT ID : TANKS S-101 & S-102 EXHAUSTER PIPING
STRESS ANALYSIS

PREPARED BY : M. Ahmed
MM. AHMED

CHECKED BY : H. Shrivastava 4/17/97
H. SHRIVASTVA

PIPING CODE : B31.3

AMBIENT TEMP. (deg F) : 70.0

COMPONENT LIBRARY : AUTOPIPE

MATERIAL LIBRARY : AUTOB313

MODEL REVISION NUMBER : 11

POINT DATA LISTING

POINT NAME	TYPE	OFFSETS (ft) X	Y	Z	PIPE ID	DESCRIPTION
*** SEGMENT A						
A00	Run	0	0	0	6"PIPE	
A01	Run	0	1.07	0		
A02	Bend	0	1.70	0		Long Elbow, Radius = 9.00 inch Bend angle change = 90.00 deg SIF - In 2.27, Out = 1.89 Flex = 6.590
A03	Valv	0.75	0	0		Rating = 150, Weight = 212 lb Surface factor = 4.30, SIF = 1.00
A04	Flex	1.00	0	0		Wt= 41 lb , Ar= 28.9 sq.in Axial= 240.0 Tors= 1833.0 Y-Shear= 338.0 Bend= 2.3 Z-Shear= 338.0 Bend= 2.3
A05	Run	0.89	0	0		
A06	Run	3.36	0	0		
A07	Run	18.00	0	0		
A08	Run	2.00	0	0		
A09	Run	18.00	0	0		
A10	Run	2.00	0	0		
A11	Run	18.00	0	0		
A12	Run	2.00	0	0		
A13	Run	7.00	0	0		
A14	Redu	0.50	0	0		
A15	Run	0.66	0	0	12"PIPE	
A16	Tee	0.83	0	0		
A17	Redu	0.83	0	0		
A18	Run	0.66	0	0	6"PIPE	
A19	Run	0.50	0	0		
A20	Run	9.00	0	0		
A21	Run	2.00	0	0		
A22	Flex	11.36	0	0		Wt= 41 lb , Ar= 28.9 sq.in Axial= 240.0 Tors= 1833.0 Y-Shear= 338.0 Bend= 2.3 Z-Shear= 338.0 Bend= 2.3
A23	Valv	0.89	0	0		Rating = 150, Weight = 212 lb Surface factor = 4.30, SIF = 1.00
A24	Run	1.00	0	0		
A25	Bend	0.75	0	0		Long Elbow, Radius = 9.00 inch Bend angle change = 90.00 deg SIF - In 2.27, Out = 1.89 Flex = 6.590
A26	Run	0	-2.26	0		
A27	Run	0	-1.24	0		

POINT DATA LISTING

POINT NAME	TYPE	OFFSETS (ft) X	Y	Z	PIPE ID	DESCRIPTION
*** SEGMENT B						
A16	Tee	74.99	2.77	0	12"PIPE	
B01	Run	0	0	7.00		
B02	Flex	0	0	3.05		Wt= 137 lb , Ar= 121.0 sq.in Axial= 282.0 Tors= 14417.0 Y-Shear= 1665.0 Bend= 10.0 Z-Shear= 1665.0 Bend= 10.0
B03	Run	0	0	0.95		

Total weight of empty pipes : 2871 lb

COMPONENT DATA LISTING

POINT NAME	---COORDINATE(ft)--- X	Y	Z	DATA TYPE	DESCRIPTION
*** SEGMENT A					
A00	0.00	0.00	0.00	ANCHOR	Rigid
					Thermal movements : None
					2 mass point(s)
A01	0.00	1.07	0.00		2 mass point(s)
				FLANGE	Weld neck SIF = 1.00
					Rating = 150, Weight = 24 lb
				FLANGE	Weld neck SIF = 1.00
					Rating = 150, Weight = 24 lb
A02 N	0.00	2.02	0.00		2 mass point(s)
A02	0.00	2.77	0.00	TI	
A02 F	0.75	2.77	0.00		2 mass point(s)
A03	0.75	2.77	0.00		2 mass point(s)
A04	1.75	2.77	0.00		2 mass point(s)
				FLANGE	Weld neck SIF = 1.00
					Rating = 150, Weight = 24 lb
A05	2.64	2.77	0.00		2 mass point(s)
				FLANGE	Weld neck SIF = 1.00
					Rating = 150, Weight = 24 lb
A06	6.00	2.77	0.00	GUIDE	ID : A06 1, Connected to Ground
					Stiffness = RIGID
					Gap-down = 0.00, Above = 0.12 inch
					Gap-left = 0.12, Right = 0.12 inch
					Friction = 0.20
					Gaps set Weightless
					2 mass point(s)
A07	24.00	2.77	0.00		2 mass point(s)
				FLANGE	Weld neck SIF = 1.00
					Rating = 150, Weight = 24 lb
				FLANGE	Weld neck SIF = 1.00
					Rating = 150, Weight = 24 lb
A08	26.00	2.77	0.00	GUIDE	ID : A08 1, Connected to Ground
					Stiffness = RIGID
					Gap-down = 0.00, Above = 0.12 inch
					Gap-left = 0.12, Right = 0.12 inch
					Friction = 0.20
					Gaps set Weightless
					2 mass point(s)
A09	44.00	2.77	0.00		2 mass point(s)
				FLANGE	Weld neck SIF = 1.00
					Rating = 150, Weight = 24 lb
				FLANGE	Weld neck SIF = 1.00
					Rating = 150, Weight = 24 lb
A10	46.00	2.77	0.00	GUIDE	ID : A10 1, Connected to Ground
					Stiffness = RIGID
					Gap-down = 0.00, Above = 0.12 inch
					Gap-left = 0.12, Right = 0.12 inch
					Friction = 0.20
					Gaps set Weightless

COMPONENT DATA LISTING

POINT NAME	---COORDINATE(ft)--- X	Y	Z	DATA TYPE	DESCRIPTION
					2 mass point(s)
A11	64.00	2.77	0.00		2 mass point(s)
				FLANGE	Weld neck SIF = 1.00
					Rating = 150, Weight = 24 lb
				FLANGE	Weld neck SIF = 1.00
					Rating = 150, Weight = 24 lb
A12	66.00	2.77	0.00	GUIDE	ID : A12 1, Connected to Ground
					Stiffness = RIGID
					Gap-down = 0.00, Above = 0.12 inch
					Gap-left = 0.12, Right = 0.12 inch
					Friction = 0.20
					Gaps set Weightless
				LINE	ID : A12 2, Connected to Ground
					Stiffness = RIGID
					Gap-Back = 0.12, forward = 0.12 inch
					Gaps set Weightless
					2 mass point(s)
A13	73.00	2.77	0.00		2 mass point(s)
				FLANGE	Weld neck SIF = 1.00
					Rating = 150, Weight = 24 lb
				FLANGE	Weld neck SIF = 1.00
					Rating = 150, Weight = 24 lb
A14	73.50	2.77	0.00		2 mass point(s)
A15	74.16	2.77	0.00		2 mass point(s)
A16	74.99	2.77	0.00	TEE	B16.9 welding tee
					SIF - In = 1.88, Out = 2.17
					2 mass point(s)
A17	75.82	2.77	0.00		2 mass point(s)
A18	76.48	2.77	0.00		2 mass point(s)
A19	76.98	2.77	0.00		2 mass point(s)
				FLANGE	Weld neck SIF = 1.00
					Rating = 150, Weight = 24 lb
				FLANGE	Weld neck SIF = 1.00
					Rating = 150, Weight = 24 lb
A20	85.98	2.77	0.00	GUIDE	ID : A20 1, Connected to Ground
					Stiffness = RIGID
					Gap-down = 0.00, Above = 0.12 inch
					Gap-left = 0.12, Right = 0.12 inch
					Friction = 0.20
					Gaps set Weightless
					2 mass point(s)
A21	87.98	2.77	0.00		2 mass point(s)
				FLANGE	Weld neck SIF = 1.00
					Rating = 150, Weight = 24 lb
				FLANGE	Weld neck SIF = 1.00
					Rating = 150, Weight = 24 lb
A22	99.34	2.77	0.00		2 mass point(s)
				FLANGE	Weld neck SIF = 1.00
					Rating = 150, Weight = 24 lb

1621 4PRINT

C O M P O N E N T D A T A L I S T I N G

```
POINT  ---COORDINATE(ft  )---  DATA
NAME     X       Y       Z     TYPE  DESCRIPTION
----- ------- ------- ------- ----- ---------------------------------------
A23    100.23    2.77    0.00        2 mass point(s)
                                FLANGE Weld neck          SIF = 1.00
                                       Rating = 150, Weight = 24 lb
A24    101.23    2.77    0.00        2 mass point(s)
A25 N  101.23    2.77    0.00        2 mass point(s)
A25    101.98    2.77    0.00 TI
A25 F  101.98    2.02    0.00        2 mass point(s)
A26    101.98    0.51    0.00        2 mass point(s)
                                FLANGE Weld neck          SIF = 1.00
                                       Rating = 150, Weight = 24 lb
                                FLANGE Weld neck          SIF = 1.00
                                       Rating = 150, Weight = 24 lb
A27    101.98   -0.73    0.00 ANCHOR Rigid
                                       Thermal movements : None

*** SEGMENT B
A16     74.99    2.77    0.00 TEE    B16.9 welding tee
                                       SIF - In = 1.88, Out = 2.17
                                       2 mass point(s)
B01     74.99    2.77    7.00 GUIDE  ID : B01  1, Connected to Ground
                                       Stiffness = RIGID
                                       Gap-down = 0.00, Above = 0.12 inch
                                       Gap-left = 0.12, Right = 0.12 inch
                                       Friction = 0.20
                                       Gaps set Weightless
                                       2 mass point(s)
B02     74.99    2.77   10.05        2 mass point(s)
                                FLANGE Weld neck          SIF = 1.00
                                       Rating = 150, Weight = 80 lb
B03     74.99    2.77   11.00 ANCHOR Rigid
                                       Thermal movements : None
                                FLANGE Weld neck          SIF = 1.00
                                       Rating = 150, Weight = 80 lb

Number of points in the system : 104
```


P I P E D A T A L I S T I N G

```
Pipe ID/      Nom/ O.D.  -----Thickness(inch)-----  Spec   Weight(lb/ft )
Material      Sch  inch  W.Th. Corr Mill Insu Ling  Grav  Pipe  Other Total
------------- ---- ----- ----- ---- ---- ---- ----  ----  ----- ----- -----
6"PIPE         6  6.625 0.280    0 0.04 2.00    0     0  19.42  2.63 22.05
A312-TP304L   STD

12"PIPE       12 12.750 0.375    0 0.05 2.00    0     0  50.72  4.51 55.23
A312-TP304L   STD
```

S101 TANKS S-101 & S-102 EXHAUSTER PIPING FLUOR DANIEL NORTHWEST, INC.
04/09/97 STRESS ANALYSIS AutoPIPE+4.60 MODEL PAGE 9

M A T E R I A L D A T A L I S T I N G

Material Name	Pipe ID	Density lb/cu.ft	Pois. Ratio	Temper. deg F	Modulus E6 psi	Expans. in/100ft	Allow. psi
A312-TP304L	6"PIPE	501.0	0.30	70.0	28.30		16700.0
				150.0		0.8985	16700.0
A312-TP304L	12"PIPE	501.0	0.30	70.0	28.30		16700.0
				150.0		0.8985	16700.0

S101 TANKS S-101 & S-102 EXHAUSTER PIPING FLUOR DANIEL NORTHWEST, INC.
04/09/97 STRESS ANALYSIS AutoPIPE+4.60 MODEL PAGE 10

TEMPERATURE AND PRESSURE DATA

POINT NAME	-----CASE 1------ PRESS. psi	TEMPER deg F	EXPAN. in/100ft	-----CASE 2------ PRESS. psi	TEMPER deg F	EXPAN. in/100ft	-----CASE 3------ PRESS. psi	TEMPER deg F	EXPAN. in/100ft
*** SEGMENT A									
A00	50.00	150	0.898						
A15	50.00	150	0.898						
A18	50.00	150	0.898						
A27	50.00	150	0.898						
*** SEGMENT B									
A16	0	150	0.898						
B03	0	150	0.898						

A N A L Y S I S S U M M A R Y

Current model revision number : 11

```
Static - Date and Time of analysis ............ Apr 9, 1997   2:05 PM
         Model Revision Number ................ 11
         Number of load cases ................. 2
         Load cases analyzed .................. GR T1
         Gaps/Friction/Yielding considered ..... Yes
         Tolerance - Force, Displacement ...... 100.00 lb   0.0162 in
         Friction - Factor, tolerance ......... 1.00   0.10
         Hanger design run .................... No
         Cut short included ................... No
         Occasional load analysis type ........ Nonlinear
         Non-linear analysis summary file ..... S101.LOG
         Base load cases for nonlinear analysis
                                                GR = None
                                                T1 = GR
         Weight of contents included .......... Yes
         Number of mass points per span ....... 2
         Pressure stiffening case ............. 0
         Water elevation for buoyancy loads .... Not considered

Modal  - Date and Time of analysis ............ Apr 9, 1997   2:05 PM
         Model Revision Number ................ 11
         Number of modes ...................... 52
         Cutoff frequency (Hz) ................ 100.0
         Weight of contents included .......... Yes
         Number of mass points per span ....... 2
         Pressure stiffening case ............. 0
         Water elevation for buoyancy loads .... Not considered

Response - Date and Time of analysis ........... Apr 9, 1997   2:06 PM
         Model Revision Number ................ 11
         Number of load cases ................. 1
         Load cases analyzed .................. R1
         Date and time of modal analysis ...... Apr 9, 1997   2:05 PM
         Number of modes ...................... 52
         Cutoff frequency (Hz) ................ 100.0
         Model revision of modal analysis ..... 11
         Weight of contents included .......... Yes
         Number of mass points per span ....... 2
         Pressure stiffening case ............. 0
         Water elevation for buoyancy loads .... Not considered
```


CODE COMPLIANCE COMBINATIONS

Combination	Category	Method	Load	Factor	Allowable	Remarks
GR + Max P	Sustain	Sum	Gravity	1.00	Automatic	Default
			Max Long	1.00		
Cold to T1	Expansion	Sum	Thermal 1	1.00	Automatic	Default
Sus. + R1	Occasion	Abs sum	Response 1	1.00	Automatic	Default
			Max Sus	1.00		
Max P	Hoop		Max Hoop	1.00	Automatic	Default

OTHER USER COMBINATIONS

Combination	Method	Load	Factor	Remarks
GR	Sum	Gravity	1.00	Default
T1	Sum	Thermal 1	1.00	Default
R1	Sum	Response 1	1.00	Default
GR+T1	Sum	Gravity	1.00	User
		Thermal 1	1.00	
TOTAL	Abs sum	GR+T1	1.00	User
		Response 1	1.00	

CODE COMPLIANCE

```
Y - Factor ............................ 0.40
Weld efficiency factor ................ 1.00
Range reduction factor ................ 1.00
Design Pressure Factor ................ 1.00
Minimum stress ratio used in reports... 0.00
Include corrosion in stress calcs. .... Y
Include torsion in code stress ........ N
Include axial force in code stress .... N
Longitudinal pressure calculation ..... PD/4t
Include rigorous pressure ............. Not analyzed
```

RESPONSE SPECTRUM LOAD CASES :

Number of load cases analysed : 1

Load case 1 - R1

Missing mass : Yes
ZPA : No

Combination method : SRSS

X- Spectrum : SC2&3
Multiplier : 1.00

SC2&3

Freq(Hz)	Grav( )	Freq(Hz)	Grav( )	Freq(Hz)	Grav( )
0.100	0.01	0.160	0.02	0.250	0.04
0.400	0.06	0.600	0.09	1.100	0.17
1.640	0.25	8.000	0.25	12.000	0.20
20.000	0.16	33.000	0.12	100.000	0.12

Y- Spectrum : SC2&3
Multiplier : 0.67

SC2&3

Freq(Hz)	Grav( )	Freq(Hz)	Grav( )	Freq(Hz)	Grav( )
0.100	0.01	0.160	0.02	0.250	0.04
0.400	0.06	0.600	0.09	1.100	0.17
1.640	0.25	8.000	0.25	12.000	0.20
20.000	0.16	33.000	0.12	100.000	0.12

Z- Spectrum : SC2&3
Multiplier : 1.00

SC2&3

Freq(Hz)	Grav( )	Freq(Hz)	Grav( )	Freq(Hz)	Grav( )
0.100	0.01	0.160	0.02	0.250	0.04
0.400	0.06	0.600	0.09	1.100	0.17
1.640	0.25	8.000	0.25	12.000	0.20
20.000	0.16	33.000	0.12	100.000	0.12

F R E Q U E N C I E S

Mode Number	Frequency (Rads/sec)	Frequency (Hertz)	Period (Sec)	Participation factors X	Y	Z
1	29.2038	4.6479	0.215	-0.007	-0.494	0.005
2	29.6580	4.7202	0.212	0.001	-0.003	-0.055
3	52.3893	8.3380	0.120	0.000	0.000	1.380
4	58.5707	9.3218	0.107	0.000	0.000	0.913
5	68.0213	10.8259	0.092	-0.006	-0.541	-0.018
6	73.1263	11.6384	0.086	0.001	0.000	0.575
7	75.7902	12.0624	0.083	0.028	0.822	0.031
8	88.9032	14.1494	0.071	-0.501	-0.203	0.001
9	89.4905	14.2428	0.070	-0.327	0.100	0.001
10	93.5651	14.8914	0.067	-0.003	0.016	1.001
11	94.0557	14.9694	0.067	0.001	-0.006	0.273
12	94.2849	15.0059	0.067	0.016	-0.588	0.038
13	95.3571	15.1766	0.066	0.000	0.001	0.119
14	95.9817	15.2760	0.065	0.464	0.282	0.005
15	103.4994	16.4724	0.061	-0.013	-0.018	0.486
16	104.1733	16.5797	0.060	-0.428	-0.485	0.200
17	104.3982	16.6155	0.060	-0.140	-0.140	-0.873
18	105.5179	16.7937	0.060	-0.686	-0.491	0.044
19	117.2112	18.6547	0.054	-0.437	0.000	-0.009
20	117.9985	18.7800	0.053	-0.033	-0.469	-0.010
21	121.1766	19.2859	0.052	0.797	-0.986	-0.011
22	121.7578	19.3783	0.052	-0.006	0.015	-1.294
23	137.5071	21.8849	0.046	-0.030	-1.480	0.010
24	137.9107	21.9492	0.046	0.000	-0.005	-1.465

F R E Q U E N C I E S

Mode Number	Frequency (Rads/sec)	Frequency (Hertz)	Period (Sec)	Participation factors X	Y	Z
25	155.4544	24.7413	0.040	-0.039	0.049	0.000
26	155.4623	24.7426	0.040	-0.030	-0.049	0.000
27	176.9600	28.1641	0.036	-0.093	0.233	0.000
28	177.0908	28.1849	0.035	0.000	0.000	-0.299
29	177.7026	28.2822	0.035	-0.115	0.182	-0.001
30	178.0312	28.3345	0.035	-0.001	0.001	0.054
31	221.3736	35.2327	0.028	-0.006	0.000	0.012
32	221.4514	35.2451	0.028	-0.003	-0.010	0.000
33	227.7661	36.2501	0.028	0.022	0.478	-0.001
34	234.7187	37.3566	0.027	-0.006	0.000	0.501
35	238.4089	37.9440	0.026	-0.930	0.939	0.000
36	251.0307	39.9528	0.025	0.004	0.803	0.000
37	251.0558	39.9568	0.025	0.001	0.000	0.773
38	294.1626	46.8174	0.021	-1.105	-0.752	0.000
39	301.2212	47.9408	0.021	0.003	0.050	0.000
40	309.0757	49.1909	0.020	0.006	0.000	-0.032
41	338.8442	53.9287	0.019	0.000	-0.192	0.000
42	356.8037	56.7871	0.018	1.798	0.000	0.000
43	359.3047	57.1851	0.017	0.008	0.000	0.145
44	372.1115	59.2234	0.017	0.000	-0.013	0.000
45	413.9238	65.8780	0.015	-0.003	0.000	0.284
46	414.1319	65.9111	0.015	0.000	0.299	0.000
47	455.3279	72.4677	0.014	0.057	0.000	0.148
48	549.6799	87.4843	0.011	-0.289	0.000	-0.042
49	558.8107	88.9375	0.011	0.000	0.611	0.000

F R E Q U E N C I E S

Mode Number	Frequency (Rads/sec)	Frequency (Hertz)	Period (Sec)	Participation factors X	Y	Z
50	601.2896	95.6982	0.010	0.401	0.000	0.117
51	601.3601	95.7094	0.010	0.000	-0.002	-0.291
52	620.1233	98.6957	0.010	0.000	-0.657	0.002

D I S P L A C E M E N T S

Point name	Load combination	TRANSLATIONS (in) X	Y	Z	ROTATIONS (deg) X	Y	Z
*** Segment A begin ***							
A00	GR	0.000	0.000	0.000	0.000	0.000	0.000
	T1	0.000	0.000	0.000	0.000	0.000	0.000
	R1	0.000	0.000	0.000	0.000	0.000	0.000
	GR+T1	0.000	0.000	0.000	0.000	0.000	0.000
	TOTAL	0.000	0.000	0.000	0.000	0.000	0.000
A01	GR	0.001	0.000	0.000	0.000	0.000	-0.011
	T1	0.000	0.010	0.000	0.000	0.000	0.001
	R1	0.000	0.000	0.000	0.002	0.002	0.002
	GR+T1	0.001	0.010	0.000	0.000	0.000	-0.010
	TOTAL	0.001	0.010	0.000	0.003	0.002	0.012
A02 N	GR	0.004	0.000	0.000	0.000	0.000	-0.020
	T1	0.000	0.018	0.000	0.000	0.000	0.002
	R1	0.001	0.000	0.001	0.004	0.004	0.004
	GR+T1	0.004	0.018	0.000	0.000	0.000	-0.019
	TOTAL	0.005	0.018	0.001	0.004	0.004	0.022
A02 F	GR	0.012	-0.010	0.000	0.000	0.000	-0.082
	T1	0.006	0.025	0.000	0.000	0.000	0.002
	R1	0.002	0.001	0.003	0.008	0.009	0.010
	GR+T1	0.018	0.015	0.000	0.000	0.000	-0.080
	TOTAL	0.020	0.016	0.003	0.008	0.009	0.090
A03	GR	0.012	-0.010	0.000	0.000	0.000	-0.082
	T1	0.006	0.025	0.000	0.000	0.000	0.002
	R1	0.002	0.001	0.003	0.008	0.009	0.010
	GR+T1	0.018	0.015	0.000	0.000	0.000	-0.080
	TOTAL	0.020	0.016	0.003	0.008	0.009	0.090
A04	GR	0.012	-0.028	0.000	0.000	0.000	-0.082
	T1	0.015	0.026	0.000	0.000	0.000	0.002
	R1	0.002	0.003	0.005	0.008	0.009	0.010
	GR+T1	0.027	-0.002	0.000	0.000	0.000	-0.080
	TOTAL	0.029	0.005	0.005	0.008	0.009	0.090
A05	GR	-0.002	0.011	0.000	0.008	0.000	-0.014
	T1	-0.533	0.000	0.023	0.000	0.010	0.000
	R1	0.000	0.005	0.006	0.005	0.009	0.007
	GR+T1	-0.534	0.011	0.024	0.008	0.010	-0.014
	TOTAL	0.535	0.016	0.030	0.013	0.019	0.021

D I S P L A C E M E N T S

Point name	Load combination	TRANSLATIONS (in) X	Y	Z	ROTATIONS (deg) X	Y	Z
A06	GR	-0.002	0.000	0.001	0.009	0.000	-0.020
	T1	-0.503	0.000	0.016	0.000	0.011	0.000
	R1	0.000	0.000	0.000	0.005	0.008	0.007
	GR+T1	-0.504	0.000	0.017	0.008	0.010	-0.021
	TOTAL	0.505	0.000	0.017	0.013	0.019	0.028
A07	GR	-0.002	-0.006	0.001	0.010	0.000	0.020
	T1	-0.341	0.000	-0.032	0.000	0.017	0.000
	R1	0.000	0.002	0.003	0.005	0.006	0.005
	GR+T1	-0.343	-0.006	-0.031	0.009	0.017	0.020
	TOTAL	0.343	0.009	0.034	0.015	0.023	0.025
A08	GR	-0.002	0.000	0.001	0.010	0.000	0.008
	T1	-0.323	0.000	-0.039	0.000	0.018	0.000
	R1	0.000	0.000	0.000	0.005	0.007	0.005
	GR+T1	-0.325	0.000	-0.038	0.010	0.018	0.008
	TOTAL	0.325	0.000	0.038	0.015	0.025	0.013
A09	GR	-0.002	-0.001	0.001	0.011	0.000	0.008
	T1	-0.162	0.000	-0.115	0.000	0.017	0.000
	R1	0.000	0.002	0.003	0.006	0.006	0.004
	GR+T1	-0.163	-0.001	-0.113	0.011	0.017	0.008
	TOTAL	0.164	0.003	0.116	0.017	0.023	0.012
A10	GR	-0.002	0.000	0.001	0.011	0.000	-0.004
	T1	-0.144	0.000	-0.121	0.000	0.015	0.000
	R1	0.000	0.000	0.000	0.006	0.007	0.004
	GR+T1	-0.145	0.000	-0.120	0.011	0.015	-0.004
	TOTAL	0.146	0.000	0.120	0.017	0.022	0.008
A11	GR	-0.002	-0.008	0.001	0.012	0.000	0.022
	T1	0.018	0.000	-0.127	0.000	-0.014	0.000
	R1	0.000	0.002	0.005	0.006	0.011	0.005
	GR+T1	0.016	-0.008	-0.127	0.012	-0.014	0.021
	TOTAL	0.016	0.010	0.132	0.018	0.025	0.026
A12	GR	-0.002	0.000	0.001	0.012	0.000	0.015
	T1	0.036	0.000	-0.121	0.000	-0.018	0.000
	R1	0.000	0.000	0.000	0.006	0.013	0.006
	GR+T1	0.034	0.000	-0.120	0.012	-0.018	0.015
	TOTAL	0.034	0.000	0.120	0.019	0.031	0.020
A13	GR	-0.002	0.013	0.000	0.013	0.000	0.014
	T1	0.098	0.000	-0.080	0.000	-0.038	0.000
	R1	0.000	0.009	0.018	0.007	0.005	0.004
	GR+T1	0.097	0.012	-0.080	0.013	-0.038	0.014
	TOTAL	0.097	0.021	0.098	0.019	0.043	0.018

D I S P L A C E M E N T S

Point name	Load combination	TRANSLATIONS (in) X	Y	Z	ROTATIONS (deg) X	Y	Z
A14	GR	-0.002	0.014	0.000	0.013	0.000	0.016
	T1	0.103	0.000	-0.076	0.000	-0.040	0.000
	R1	0.000	0.009	0.018	0.007	0.003	0.004
	GR+T1	0.101	0.014	-0.076	0.013	-0.040	0.016
	TOTAL	0.101	0.023	0.094	0.019	0.043	0.019
A15	GR	-0.002	0.017	0.000	0.013	0.000	0.018
	T1	0.109	0.000	-0.070	0.000	-0.042	0.000
	R1	0.000	0.009	0.018	0.007	0.000	0.003
	GR+T1	0.107	0.016	-0.070	0.013	-0.042	0.018
	TOTAL	0.107	0.026	0.088	0.019	0.042	0.021
A16	GR	-0.002	0.020	0.000	0.013	0.000	0.018
	T1	0.116	0.000	-0.063	0.000	-0.042	0.000
	R1	0.000	0.010	0.018	0.007	0.000	0.003
	GR+T1	0.114	0.019	-0.063	0.013	-0.042	0.018
	TOTAL	0.115	0.029	0.081	0.019	0.042	0.021
A17	GR	-0.002	0.023	0.000	0.013	0.000	0.019
	T1	0.124	0.000	-0.056	0.000	-0.042	0.000
	R1	0.000	0.010	0.018	0.007	0.000	0.003
	GR+T1	0.122	0.022	-0.056	0.013	-0.042	0.018
	TOTAL	0.122	0.033	0.074	0.019	0.042	0.021
A18	GR	-0.002	0.026	0.000	0.013	0.000	0.019
	T1	0.130	-0.001	-0.050	0.000	-0.042	0.000
	R1	0.000	0.011	0.018	0.007	0.001	0.003
	GR+T1	0.128	0.025	-0.050	0.013	-0.042	0.019
	TOTAL	0.128	0.036	0.068	0.019	0.043	0.021
A19	GR	-0.002	0.028	0.000	0.013	0.000	0.020
	T1	0.134	-0.001	-0.046	0.000	-0.041	0.000
	R1	0.000	0.011	0.018	0.007	0.003	0.002
	GR+T1	0.132	0.027	-0.045	0.013	-0.041	0.019
	TOTAL	0.132	0.038	0.063	0.019	0.044	0.022
A20	GR	-0.002	0.000	0.000	0.012	0.000	-0.097
	T1	0.215	0.000	0.018	0.000	-0.029	0.001
	R1	0.000	0.000	0.000	0.006	0.005	0.014
	GR+T1	0.213	0.000	0.018	0.012	-0.029	-0.096
	TOTAL	0.213	0.000	0.018	0.018	0.034	0.110
A21	GR	-0.002	-0.052	0.000	0.012	0.000	-0.149
	T1	0.233	0.000	0.030	0.000	-0.028	0.001
	R1	0.000	0.007	0.001	0.006	0.004	0.018
	GR+T1	0.231	-0.052	0.030	0.012	-0.028	-0.148
	TOTAL	0.231	0.059	0.031	0.018	0.032	0.166

D I S P L A C E M E N T S

Point name	Load combination	TRANSLATIONS (in) X	Y	Z	ROTATIONS (deg) X	Y	Z
A22	GR	-0.002	-0.574	-0.001	0.011	0.000	-0.247
	T1	0.335	0.004	0.092	0.000	-0.025	0.002
	R1	0.000	0.062	0.033	0.006	0.019	0.026
	GR+T1	0.333	-0.570	0.092	0.011	-0.025	-0.245
	TOTAL	0.333	0.632	0.125	0.017	0.044	0.271
A23	GR	-0.017	-0.032	0.000	0.000	0.000	0.094
	T1	-0.015	0.032	0.000	0.000	0.001	-0.002
	R1	0.002	0.003	0.006	0.008	0.008	0.008
	GR+T1	-0.032	0.000	0.000	0.001	0.001	0.092
	TOTAL	0.035	0.003	0.006	0.009	0.009	0.101
A24	GR	-0.017	-0.012	0.000	0.000	0.000	0.094
	T1	-0.006	0.032	0.000	0.000	0.001	-0.002
	R1	0.002	0.001	0.004	0.008	0.008	0.008
	GR+T1	-0.023	0.020	0.000	0.001	0.001	0.092
	TOTAL	0.026	0.021	0.004	0.009	0.009	0.101
A25 N	GR	-0.017	-0.012	0.000	0.000	0.000	0.094
	T1	-0.006	0.032	0.000	0.000	0.001	-0.002
	R1	0.002	0.001	0.004	0.008	0.008	0.008
	GR+T1	-0.023	0.020	0.000	0.001	0.001	0.092
	TOTAL	0.026	0.021	0.004	0.009	0.009	0.101
A25 F	GR	-0.008	0.000	0.000	0.000	0.000	0.029
	T1	0.001	0.025	0.000	0.000	0.000	-0.002
	R1	0.001	0.000	0.002	0.005	0.004	0.004
	GR+T1	-0.008	0.025	0.000	0.000	0.000	0.027
	TOTAL	0.009	0.025	0.002	0.005	0.004	0.032
A26	GR	-0.002	0.000	0.000	0.000	0.000	0.013
	T1	0.000	0.011	0.000	0.000	0.000	-0.001
	R1	0.000	0.000	0.000	0.003	0.002	0.002
	GR+T1	-0.002	0.011	0.000	0.000	0.000	0.012
	TOTAL	0.002	0.011	0.000	0.003	0.002	0.014
A27	GR	0.000	0.000	0.000	0.000	0.000	0.000
	T1	0.000	0.000	0.000	0.000	0.000	0.000
	R1	0.000	0.000	0.000	0.000	0.000	0.000
	GR+T1	0.000	0.000	0.000	0.000	0.000	0.000
	TOTAL	0.000	0.000	0.000	0.000	0.000	0.000

*** Segment A end ***

*** Segment B begin ***

D I S P L A C E M E N T S

Point name	Load combination	TRANSLATIONS (in) X	Y	Z	ROTATIONS (deg) X	Y	Z
A16	GR	-0.002	0.020	0.000	0.013	0.000	0.018
	T1	0.116	0.000	-0.063	0.000	-0.042	0.000
	R1	0.000	0.010	0.018	0.007	0.000	0.003
	GR+T1	0.114	0.019	-0.063	0.013	-0.042	0.018
	TOTAL	0.115	0.029	0.081	0.019	0.042	0.021
B01	GR	-0.001	0.000	0.000	0.016	0.000	0.017
	T1	0.052	0.000	0.000	0.000	-0.045	0.000
	R1	0.000	0.000	0.018	0.007	0.000	0.003
	GR+T1	0.050	0.000	0.000	0.015	-0.044	0.017
	TOTAL	0.050	0.000	0.018	0.022	0.045	0.020
B02	GR	-0.001	-0.011	0.000	0.017	0.000	0.017
	T1	0.023	0.000	0.027	0.000	-0.045	0.000
	R1	0.000	0.004	0.018	0.007	0.000	0.003
	GR+T1	0.022	-0.011	0.027	0.017	-0.044	0.017
	TOTAL	0.022	0.015	0.046	0.024	0.045	0.020
B03	GR	0.000	0.000	0.000	0.000	0.000	0.000
	T1	0.000	0.000	0.000	0.000	0.000	0.000
	R1	0.000	0.000	0.000	0.000	0.000	0.000
	GR+T1	0.000	0.000	0.000	0.000	0.000	0.000
	TOTAL	0.000	0.000	0.000	0.000	0.000	0.000

*** Segment B end ***

R E S T R A I N T R E A C T I O N S

Point name	Load combination	FORCES (lb) X	Y	Z	Result	MOMENTS (ft-lb) X	Y	Z	Result
A00	Anchor								
	GR	-1	-849	0	849	5	0	-968	968
	T1	-44	-1	1	44	3	-2	119	119
	R1	81	77	103	152	280	132	250	398
	GR+T1	-45	-850	1	852	7	-2	-849	849
	TOTAL	126	927	104	942	287	134	1099	1143
A06	Guide								
	GR	0	-365	0	365	0	0	0	0
	T1	-75	1	2	75	0	0	0	0
	R1	0	16	21	26	0	0	0	0
	GR+T1	-75	-364	2	372	0	0	0	0
	TOTAL	75	380	23	388	0	0	0	0
A08	Guide								
	GR	0	-513	0	513	0	0	0	0
	T1	-101	0	-12	102	0	0	0	0
	R1	0	38	48	61	0	0	0	0
	GR+T1	-101	-513	-12	523	0	0	0	0
	TOTAL	101	552	60	564	0	0	0	0
A10	Guide								
	GR	0	-499	0	499	0	0	0	0
	T1	-73	0	-62	96	0	0	0	0
	R1	0	41	61	74	0	0	0	0
	GR+T1	-73	-499	-62	508	0	0	0	0
	TOTAL	73	540	123	559	0	0	0	0
A12	Guide								
	GR	0	-462	0	462	0	0	0	0
	T1	25	-1	-83	87	0	0	0	0
	R1	0	48	91	103	0	0	0	0
	GR+T1	25	-463	-83	471	0	0	0	0
	TOTAL	25	511	174	540	0	0	0	0
A12	Line Stp								
	GR	0	0	0	0	0	0	0	0
	T1	0	0	0	0	0	0	0	0
	R1	210	0	0	210	0	0	0	0
	GR+T1	0	0	0	0	0	0	0	0
	TOTAL	210	0	0	210	0	0	0	0
A20	Guide								
	GR	0	-840	0	840	0	0	0	0
	T1	154	2	13	154	0	0	0	0
	R1	0	44	121	129	0	0	0	0
	GR+T1	154	-838	13	852	0	0	0	0
	TOTAL	154	882	134	905	0	0	0	0

RESTRAINT REACTIONS

Point name	Load combination	FORCES (lb) X	Y	Z	Result	MOMENTS (ft-lb) X	Y	Z	Result
A27	Anchor								
	GR	1	-890	0	890	6	0	1019	1019
	T1	28	-1	4	28	13	8	-95	97
	R1	66	62	85	125	290	109	224	382
	GR+T1	29	-891	4	891	19	8	924	924
	TOTAL	96	953	89	962	309	117	1148	1195
B01	Guide								
	GR	0	-808	0	808	0	0	0	0
	T1	83	0	0	83	0	0	0	0
	R1	79	31	0	85	0	0	0	0
	GR+T1	83	-808	0	812	0	0	0	0
	TOTAL	163	839	0	854	0	0	0	0
B03	Anchor								
	GR	0	-288	0	288	-30	0	82	87
	T1	3	0	3	4	0	-2	-1	2
	R1	13	9	28	32	1	1	13	14
	GR+T1	3	-288	3	288	-30	-2	81	87
	TOTAL	16	297	30	299	31	3	95	100

GLOBAL FORCES & MOMENTS

Point name	Load combination	FORCES (lb) X	Y	Z	Result	MOMENTS (ft-lb) X	Y	Z	Result
*** Segment A begin ***									
A00	GR	1	849	0	849	-5	0	968	968
	T1	44	1	-1	44	-3	2	-119	119
	R1	81	77	103	152	280	132	250	398
	GR+T1	45	850	-1	852	-7	2	849	849
	TOTAL	126	927	104	941	287	134	1099	1143
A01 -	GR	1	826	0	826	-5	0	969	969
	T1	44	1	-1	44	-2	2	-72	72
	R1	81	76	103	152	170	132	175	277
	GR+T1	45	827	-1	828	-6	2	897	897
	TOTAL	126	903	104	918	176	134	1072	1094
A01 +	GR	1	778	0	778	-5	0	969	969
	T1	44	1	-1	44	-2	2	-72	72
	R1	79	76	102	150	170	132	175	277
	GR+T1	45	779	-1	780	-6	2	897	897
	TOTAL	124	855	103	870	176	134	1072	1094
A02 N	GR	1	757	0	757	-5	0	970	970
	T1	44	1	-1	44	-1	2	-31	31
	R1	78	76	101	148	73	132	123	194
	GR+T1	45	758	-1	759	-5	2	939	939
	TOTAL	123	834	102	849	78	134	1062	1073
A02 F	GR	1	731	0	731	-5	0	416	416
	T1	44	1	-1	44	0	1	1	2
	R1	75	75	100	146	4	56	47	73
	GR+T1	45	732	-1	733	-5	1	417	418
	TOTAL	120	807	101	822	9	58	464	468
A03	GR	1	731	0	731	-5	0	414	415
	T1	44	1	-1	44	0	1	1	2
	R1	63	69	87	128	4	56	47	73
	GR+T1	45	732	-1	733	-5	1	416	416
	TOTAL	108	801	88	813	9	58	463	466
A04 -	GR	1	84	0	84	-5	0	7	9
	T1	44	1	-1	44	0	0	0	1
	R1	15	22	24	36	4	1	1	4
	GR+T1	45	85	-1	96	-5	0	8	9
	TOTAL	60	107	25	125	9	1	8	12

G L O B A L F O R C E S & M O M E N T S

Point name		Load combination	FORCES (lb) X	Y	Z	Result	MOMENTS (ft-lb) X	Y	Z	Result
A04	+	GR	1	19	0	19	-5	0	7	9
		T1	44	1	-1	44	0	0	0	1
		R1	3	4	4	6	4	1	1	4
		GR+T1	45	20	-1	49	-5	0	8	9
		TOTAL	48	24	5	54	9	1	8	12
A05	-	GR	1	-63	0	63	-5	0	9	10
		T1	44	1	-1	44	0	0	0	1
		R1	3	4	4	6	4	1	1	4
		GR+T1	45	-62	-1	77	-5	0	8	10
		TOTAL	48	66	5	82	9	1	9	13
A05	+	GR	1	-87	0	87	-5	0	9	10
		T1	44	1	-1	44	0	0	0	1
		R1	7	7	9	14	4	1	1	4
		GR+T1	45	-86	-1	97	-5	0	8	10
		TOTAL	52	94	10	108	9	1	9	13
A06	-	GR	1	-161	0	162	-5	0	427	427
		T1	44	1	-1	44	0	-4	-4	5
		R1	14	11	14	23	4	40	31	51
		GR+T1	45	-160	-1	167	-5	-4	423	423
		TOTAL	59	171	15	182	9	44	454	456
A06	+	GR	1	204	0	204	-5	0	427	427
		T1	119	0	-3	119	0	-4	-4	5
		R1	27	14	17	34	4	40	31	51
		GR+T1	120	204	-3	236	-5	-4	423	423
		TOTAL	146	218	20	263	9	44	454	456
A07	-	GR	1	-193	0	193	-5	0	331	331
		T1	119	0	-3	119	0	-64	1	64
		R1	65	19	22	71	4	75	57	95
		GR+T1	120	-193	-3	227	-5	-65	332	338
		TOTAL	185	213	25	283	9	140	389	413
A07	+	GR	1	-241	0	241	-5	0	331	331
		T1	119	0	-3	119	0	-64	1	64
		R1	81	23	27	88	4	75	57	95
		GR+T1	120	-241	-3	269	-5	-65	332	338
		TOTAL	201	264	30	333	9	140	389	413
A08	-	GR	1	-285	0	285	-5	0	857	857
		T1	119	0	-3	119	0	-71	1	71
		R1	85	24	28	93	4	103	88	135
		GR+T1	120	-286	-3	310	-5	-72	859	862
		TOTAL	205	310	32	372	9	175	946	962

G L O B A L F O R C E S & M O M E N T S

Point name		Load combination	FORCES (lb) X	Y	Z	Result	MOMENTS (ft-lb) X	Y	Z	Result
A08	+	GR	1	228	0	228	-5	0	857	857
		T1	220	0	9	220	0	-71	1	71
		R1	94	21	28	101	4	103	88	135
		GR+T1	221	228	9	317	-5	-72	859	862
		TOTAL	315	248	37	403	9	175	946	962
A09	-	GR	1	-169	0	169	-5	-1	333	333
		T1	220	0	9	220	0	89	-1	89
		R1	121	19	26	126	4	98	61	115
		GR+T1	221	-169	9	278	-5	89	332	344
		TOTAL	342	188	35	392	9	187	393	435
A09	+	GR	1	-217	0	217	-5	-1	333	333
		T1	220	0	9	220	0	89	-1	89
		R1	131	23	31	136	4	98	61	115
		GR+T1	221	-217	9	310	-5	89	332	344
		TOTAL	351	240	40	428	9	187	393	435
A10	-	GR	1	-261	0	261	-5	-1	812	812
		T1	220	0	9	220	0	107	-1	107
		R1	133	24	33	139	4	140	94	168
		GR+T1	221	-261	9	342	-5	107	811	818
		TOTAL	354	285	42	456	9	246	904	937
A10	+	GR	1	238	0	238	-5	-1	812	812
		T1	293	0	5	293	0	107	-1	107
		R1	138	22	35	144	4	140	94	168
		GR+T1	294	237	5	378	-5	107	811	818
		TOTAL	432	259	40	505	9	246	904	937
A11	-	GR	1	-159	0	159	-5	-1	106	106
		T1	293	0	5	293	0	200	3	200
		R1	150	18	23	153	4	159	82	179
		GR+T1	294	-160	5	334	-5	199	109	227
		TOTAL	444	178	28	479	9	359	191	407
A11	+	GR	1	-207	0	207	-5	-1	106	106
		T1	293	0	5	293	0	200	3	200
		R1	154	23	30	158	4	159	82	179
		GR+T1	294	-208	5	360	-5	199	109	227
		TOTAL	448	230	36	505	9	359	191	407
A12	-	GR	1	-251	0	251	-5	-1	565	565
		T1	293	0	5	293	0	211	4	211
		R1	155	24	32	160	4	178	110	210
		GR+T1	294	-252	5	387	-5	210	568	606
		TOTAL	448	276	37	528	9	388	679	782

S101 TANKS S-101 & S-102 EXHAUSTER PIPING FLUOR DANIEL NORTHWEST, INC.
04/09/97 STRESS ANALYSIS AutoPIPE+4.60 RESULT PAGE 17

G L O B A L F O R C E S & M O M E N T S

Point name	Load combination	FORCES (lb) X	Y	Z	Result	MOMENTS (ft-lb) X	Y	Z	Result
A12 +	GR	1	210	0	210	-5	-1	565	565
	T1	268	1	19	269	0	211	4	211
	R1	107	32	80	137	4	178	110	210
	GR+T1	269	211	19	343	-5	210	568	606
	TOTAL	376	243	99	459	9	388	679	782
A13 -	GR	1	56	0	56	-5	-1	-366	367
	T1	268	1	19	269	0	343	-3	343
	R1	95	29	72	123	4	372	120	391
	GR+T1	269	57	19	276	-5	342	-369	504
	TOTAL	364	86	91	385	9	715	490	866
A13 +	GR	1	8	0	8	-5	-1	-366	367
	T1	268	1	19	269	0	343	-3	343
	R1	87	25	63	110	4	372	120	391
	GR+T1	269	9	19	270	-5	342	-369	504
	TOTAL	356	34	81	367	9	715	490	866
A14	GR	1	-3	0	3	-5	-1	-368	368
	T1	268	1	19	269	0	353	-3	353
	R1	86	24	61	108	4	403	131	423
	GR+T1	269	-2	19	270	-5	352	-371	511
	TOTAL	355	26	80	365	9	754	502	906
A15	GR	1	-21	0	21	-5	-1	-360	360
	T1	268	1	19	269	0	365	-4	365
	R1	83	23	58	104	4	441	145	465
	GR+T1	269	-20	19	271	-5	364	-364	515
	TOTAL	353	43	77	363	9	806	510	953
A16 -	GR	1	-67	0	67	-5	-1	-324	324
	T1	268	1	19	269	0	381	-5	381
	R1	80	21	54	99	4	487	161	513
	GR+T1	269	-66	19	278	-5	380	-328	502
	TOTAL	349	88	73	367	9	866	490	995
A16 +	GR	1	-98	0	98	6	1	-406	406
	T1	182	1	17	182	0	-236	-4	236
	R1	72	17	55	92	5	495	152	518
	GR+T1	183	-97	17	208	6	-235	-410	472
	TOTAL	255	113	72	288	11	730	561	921
A17	GR	1	-144	0	144	6	1	-306	306
	T1	182	1	17	182	0	-222	-5	222
	R1	67	17	61	92	5	448	156	474
	GR+T1	183	-143	17	233	6	-221	-310	381
	TOTAL	250	159	78	306	11	669	466	816

S101 TANKS S-101 & S-102 EXHAUSTER PIPING FLUOR DANIEL NORTHWEST, INC.
04/09/97 STRESS ANALYSIS AutoPIPE+4.60 RESULT PAGE 18

G L O B A L F O R C E S & M O M E N T S

Point name	Load combination	FORCES (lb) X	Y	Z	Result	MOMENTS (ft-lb) X	Y	Z	Result
A18	GR	1	-177	0	177	6	1	-199	199
	T1	182	1	17	182	0	-211	-6	211
	R1	64	17	65	93	5	407	159	437
	GR+T1	183	-176	17	254	6	-210	-205	293
	TOTAL	247	192	82	323	11	617	363	716
A19 -	GR	1	-188	0	188	6	1	-108	108
	T1	182	1	17	182	0	-203	-6	203
	R1	63	17	66	93	5	374	160	407
	GR+T1	183	-187	17	262	6	-202	-114	232
	TOTAL	246	204	83	330	11	576	274	638
A19 +	GR	1	-236	0	236	6	1	-108	108
	T1	182	1	17	182	0	-203	-6	203
	R1	54	21	77	96	5	374	160	407
	GR+T1	183	-235	17	298	6	-202	-114	232
	TOTAL	237	255	94	361	11	576	274	638
A20 -	GR	1	-434	0	434	6	1	2906	2906
	T1	182	1	17	182	0	-52	-15	55
	R1	41	25	86	99	5	367	226	431
	GR+T1	183	-433	17	470	6	-52	2890	2891
	TOTAL	224	458	103	520	11	419	3116	3144
A20 +	GR	1	406	0	406	6	1	2906	2906
	T1	28	-1	4	28	0	-52	-15	55
	R1	37	24	36	57	5	367	226	431
	GR+T1	29	405	4	406	6	-52	2890	2891
	TOTAL	66	429	40	436	11	419	3116	3144
A21 -	GR	1	362	0	362	6	0	2138	2138
	T1	28	-1	4	28	0	-45	-13	47
	R1	34	24	35	54	5	301	181	351
	GR+T1	29	361	4	362	6	-44	2125	2126
	TOTAL	63	384	39	391	11	346	2306	2332
A21 +	GR	1	314	0	314	6	0	2138	2138
	T1	28	-1	4	28	0	-45	-13	47
	R1	24	22	33	47	5	301	181	351
	GR+T1	29	313	4	314	6	-44	2125	2126
	TOTAL	53	334	37	341	11	346	2306	2332
A22 -	GR	1	63	0	63	6	0	-2	7
	T1	28	-1	4	28	0	-2	0	2
	R1	8	10	19	23	5	2	1	6
	GR+T1	29	62	4	69	6	-2	-3	7
	TOTAL	38	72	23	85	11	3	4	12

S101 TANKS S-101 & S-102 EXHAUSTER PIPING FLUOR DANIEL NORTHWEST, INC.
04/09/97 STRESS ANALYSIS AutoPIPE+4.60 RESULT PAGE 19

G L O B A L F O R C E S & M O M E N T S

Point name	Load combination	FORCES (lb) X	Y	Z	Result	MOMENTS (ft-lb) X	Y	Z	Result
A22 +	GR	1	-2	0	2	6	0	-2	7
	T1	28	-1	4	28	0	-2	0	2
	R1	5	5	8	10	5	2	1	6
	GR+T1	29	-3	4	30	6	-2	-3	7
	TOTAL	34	8	11	37	11	3	4	12
A23 -	GR	1	-84	0	84	6	0	18	19
	T1	28	-1	4	28	0	2	0	2
	R1	5	6	8	11	5	2	2	6
	GR+T1	29	-85	4	90	6	2	18	19
	TOTAL	34	91	12	98	11	3	20	23
A23 +	GR	1	-108	0	108	6	0	18	19
	T1	28	-1	4	28	0	2	0	2
	R1	13	18	22	32	5	2	2	6
	GR+T1	29	-109	4	113	6	2	18	19
	TOTAL	42	127	26	137	11	3	20	23
A24	GR	1	-755	0	755	6	0	449	449
	T1	28	-1	4	28	0	5	2	6
	R1	61	60	82	118	5	48	38	61
	GR+T1	29	-756	4	757	6	5	451	451
	TOTAL	90	816	85	826	11	53	489	492
A25 N	GR	1	-755	0	755	6	0	451	451
	T1	28	-1	4	28	0	5	2	6
	R1	61	60	82	119	5	48	38	61
	GR+T1	29	-756	4	757	6	5	452	453
	TOTAL	90	817	86	826	11	53	490	493
A25 F	GR	1	-781	0	781	6	0	1023	1023
	T1	28	-1	4	28	2	8	-18	20
	R1	64	61	84	121	58	109	87	151
	GR+T1	29	-782	4	783	9	8	1004	1004
	TOTAL	93	843	87	853	67	117	1091	1100
A26 -	GR	1	-814	0	814	6	0	1021	1021
	T1	28	-1	4	28	8	8	-61	62
	R1	65	61	84	122	185	109	151	262
	GR+T1	29	-816	4	816	15	8	960	960
	TOTAL	94	877	88	886	199	117	1111	1135
A26 +	GR	1	-862	0	862	6	0	1021	1021
	T1	28	-1	4	28	8	8	-61	62
	R1	66	62	85	124	185	109	151	262
	GR+T1	29	-864	4	864	15	8	960	960
	TOTAL	95	925	89	935	199	117	1111	1135

S101 TANKS S-101 & S-102 EXHAUSTER PIPING FLUOR DANIEL NORTHWEST, INC.
04/09/97 STRESS ANALYSIS AutoPIPE+4.60 RESULT PAGE 20

G L O B A L F O R C E S & M O M E N T S

Point name	Load combination	FORCES (lb) X	Y	Z	Result	MOMENTS (ft-lb) X	Y	Z	Result
A27	GR	1	-890	0	890	6	0	1019	1019
	T1	28	-1	4	28	13	8	-95	97
	R1	66	62	85	125	290	109	224	382
	GR+T1	29	-891	4	891	19	8	924	924
	TOTAL	96	953	89	962	309	117	1148	1195

*** Segment A end ***

*** Segment B begin ***

A16	GR	0	31	0	31	-11	-2	82	83
	T1	87	0	2	87	1	617	-1	617
	R1	13	12	95	96	8	79	13	81
	GR+T1	86	31	2	92	-11	615	81	620
	TOTAL	99	42	97	145	19	694	95	700
B01 -	GR	0	-356	0	356	-1149	-1	82	1152
	T1	87	0	2	87	0	11	-1	11
	R1	31	12	60	69	43	94	13	104
	GR+T1	86	-356	2	366	-1149	10	81	1152
	TOTAL	118	367	62	391	1193	104	95	1201
B01 +	GR	0	452	0	452	-1149	-1	82	1152
	T1	3	0	3	4	0	11	-1	11
	R1	38	17	48	64	43	94	13	104
	GR+T1	3	452	3	452	-1149	10	81	1152
	TOTAL	41	469	50	473	1193	104	95	1201
B02 -	GR	0	283	0	283	-28	0	82	87
	T1	3	0	3	4	0	1	-1	2
	R1	23	11	35	43	1	1	13	14
	GR+T1	3	283	3	283	-28	1	81	86
	TOTAL	26	295	37	298	29	2	95	99
B02 +	GR	0	66	0	66	-28	0	82	87
	T1	3	0	3	4	0	1	-1	2
	R1	6	5	24	25	1	1	13	14
	GR+T1	3	66	3	67	-28	1	81	86
	TOTAL	9	71	26	76	29	2	95	99
B03	GR	0	-208	0	208	-30	0	82	87
	T1	3	0	3	4	0	-2	-1	2
	R1	6	5	25	26	1	1	13	14
	GR+T1	3	-208	3	208	-30	-2	81	87
	TOTAL	9	212	28	214	31	3	95	100

*** Segment B end ***

ASME B31.3c (1992) CODE COMPLIANCE

Point name	Load combination	(Moments in ft-lb) In-Pl. Moment	Out-Pl. Moment	Torsion Moment	S.I.F In	S.I.F Out	Eq. no.	(Stress in psi) Load type	Code Stress	Code Allow.
*** Segment A begin ***										
A00	Max P						(3a)	HOOP	656	16700
	GR + Max P	5	968		1.00	1.00	(18)	SUST	1663	16700
	Cold to T1	3	119	2	1.00	1.00	(17)	DISP	168	25050
	Sus. + R1	285	1218		1.00	1.00	(18)	OCC	2193	22211
A01	Max P						(3a)	HOOP	656	16700
	GR + Max P	5	969		1.00	1.00	(18)	SUST	1664	16700
	Cold to T1	2	72	2	1.00	1.00	(17)	DISP	102	25050
	Sus. + R1	174	1144		1.00	1.00	(18)	OCC	2008	22211
A02 N-	Max P						(3a)	HOOP	656	16700
	GR + Max P	5	970		1.00	1.00	(18)	SUST	1666	16700
	Cold to T1	1	31	2	1.00	1.00	(17)	DISP	43	25050
	Sus. + R1	78	1093		1.00	1.00	(18)	OCC	1867	22211
A02 N+	Max P						(3a)	HOOP	656	16700
	GR + Max P	970	5		2.27	1.89	(18)	SUST	3399	16700
	Cold to T1	31	1	2	2.27	1.89	(17)	DISP	98	25050
	Sus. + R1	1093	78		2.27	1.89	(18)	OCC	3838	22211
A02 F-	Max P						(3a)	HOOP	656	16700
	GR + Max P	416	0		2.27	1.89	(18)	SUST	1627	16700
	Cold to T1	1	1	0	2.27	1.89	(17)	DISP	6	25050
	Sus. + R1	463	56		2.27	1.89	(18)	OCC	1839	22211
A02 F+	Max P						(3a)	HOOP	656	16700
	GR + Max P	416	0		1.00	1.00	(18)	SUST	883	16700
	Cold to T1	1	1	0	1.00	1.00	(17)	DISP	3	25050
	Sus. + R1	463	56		1.00	1.00	(18)	OCC	987	22211
A03	Max P						(3a)	HOOP	656	16700
	GR + Max P	414	0		1.00	1.00	(18)	SUST	881	16700
	Cold to T1	1	1	0	1.00	1.00	(17)	DISP	3	25050
	Sus. + R1	461	56		1.00	1.00	(18)	OCC	984	22211
A05	Max P						(3a)	HOOP	656	16700
	GR + Max P	9	0		1.00	1.00	(18)	SUST	308	16700
	Cold to T1	0	0	0	1.00	1.00	(17)	DISP	1	25050
	Sus. + R1	10	1		1.00	1.00	(18)	OCC	310	22211
A06	Max P						(3a)	HOOP	656	16700
	GR + Max P	427	0		1.00	1.00	(18)	SUST	899	16700
	Cold to T1	4	4	0	1.00	1.00	(17)	DISP	8	25050
	Sus. + R1	458	40		1.00	1.00	(18)	OCC	970	22211

ASME B31.3c (1992) CODE COMPLIANCE

Point name	Load combination	(Moments in ft-lb) In-Pl. Moment	Out-Pl. Moment	Torsion Moment	S.I.F In	S.I.F Out	Eq. no.	(Stress in psi) Load type	Code Stress	Code Allow.
A07	Max P						(3a)	HOOP	656	16700
	GR + Max P	331	0		1.00	1.00	(18)	SUST	763	16700
	Cold to T1	1	64	0	1.00	1.00	(17)	DISP	91	25050
	Sus. + R1	388	76		1.00	1.00	(18)	OCC	897	22211
A08	Max P						(3a)	HOOP	656	16700
	GR + Max P	857	0		1.00	1.00	(18)	SUST	1507	16700
	Cold to T1	1	71	0	1.00	1.00	(17)	DISP	101	25050
	Sus. + R1	945	103		1.00	1.00	(18)	OCC	1698	22211
A09	Max P						(3a)	HOOP	656	16700
	GR + Max P	333	1		1.00	1.00	(18)	SUST	766	16700
	Cold to T1	1	89	0	1.00	1.00	(17)	DISP	126	25050
	Sus. + R1	394	99		1.00	1.00	(18)	OCC	929	22211
A10	Max P						(3a)	HOOP	656	16700
	GR + Max P	812	1		1.00	1.00	(18)	SUST	1442	16700
	Cold to T1	1	107	0	1.00	1.00	(17)	DISP	151	25050
	Sus. + R1	906	140		1.00	1.00	(18)	OCC	1680	22211
A11	Max P						(3a)	HOOP	656	16700
	GR + Max P	106	1		1.00	1.00	(18)	SUST	446	16700
	Cold to T1	3	200	0	1.00	1.00	(17)	DISP	283	25050
	Sus. + R1	188	160		1.00	1.00	(18)	OCC	699	22211
A12	Max P						(3a)	HOOP	656	16700
	GR + Max P	565	1		1.00	1.00	(18)	SUST	1094	16700
	Cold to T1	4	211	0	1.00	1.00	(17)	DISP	298	25050
	Sus. + R1	675	179		1.00	1.00	(18)	OCC	1390	22211
A13	Max P						(3a)	HOOP	656	16700
	GR + Max P	366	1		1.00	1.00	(18)	SUST	813	16700
	Cold to T1	3	343	0	1.00	1.00	(17)	DISP	485	25050
	Sus. + R1	487	373		1.00	1.00	(18)	OCC	1366	22211
A14	Max P						(3a)	HOOP	656	16700
	GR + Max P	368	1		1.00	1.00	(18)	SUST	815	16700
	Cold to T1	3	353	0	1.00	1.00	(17)	DISP	498	25050
	Sus. + R1	499	404		1.00	1.00	(18)	OCC	1413	22211
A15	Max P						(3a)	HOOP	952	16700
	GR + Max P	360	1		1.00	1.00	(18)	SUST	524	16700
	Cold to T1	4	365	0	1.00	1.00	(17)	DISP	100	25050
	Sus. + R1	505	443		1.00	1.00	(18)	OCC	651	22211
A16 -	Max P						(3a)	HOOP	952	16700
	GR + Max P	1	324		1.88	2.17	(18)	SUST	618	16700
	Cold to T1	381	5	0	1.88	2.17	(17)	DISP	196	25050
	Sus. + R1	488	485		1.88	2.17	(18)	OCC	886	22211

S101 TANKS S-101 & S-102 EXHAUSTER PIPING FLUOR DANIEL NORTHWEST, INC.
04/09/97 STRESS ANALYSIS AutoPIPE+4.60 RESULT PAGE 23

ASME B31.3c (1992) CODE COMPLIANCE

Point name	Load combination	In-Pl. Moment (Moments in ft-lb)	Out-Pl. Moment	Torsion Moment	S.I.F In	S.I.F Out	Eq. no. (Stress in psi)	Load type	Code Stress	Code Allow.
A16 +	Max P						(3a)	HOOP	952	16700
	GR + Max P	1	406		1.88	2.17	(18)	SUST	666	16700
	Cold to T1	236	4	0	1.88	2.17	(17)	DISP	121	25050
	Sus. + R1	496	557		1.88	2.17	(18)	OCC	937	22211
A17	Max P						(3a)	HOOP	952	16700
	GR + Max P	306	1		1.00	1.00	(18)	SUST	509	16700
	Cold to T1	5	222	0	1.00	1.00	(17)	DISP	61	25050
	Sus. + R1	462	449		1.00	1.00	(18)	OCC	639	22211
A18	Max P						(3a)	HOOP	656	16700
	GR + Max P	199	1		1.00	1.00	(18)	SUST	577	16700
	Cold to T1	6	211	0	1.00	1.00	(17)	DISP	298	25050
	Sus. + R1	358	408		1.00	1.00	(18)	OCC	1194	22211
A19	Max P						(3a)	HOOP	656	16700
	GR + Max P	108	1		1.00	1.00	(18)	SUST	448	16700
	Cold to T1	6	203	0	1.00	1.00	(17)	DISP	286	25050
	Sus. + R1	268	375		1.00	1.00	(18)	OCC	1023	22211
A20	Max P						(3a)	HOOP	656	16700
	GR + Max P	2906	1		1.00	1.00	(18)	SUST	4400	16700
	Cold to T1	15	52	0	1.00	1.00	(17)	DISP	77	25050
	Sus. + R1	3132	367		1.00	1.00	(18)	OCC	5009	22211
A21	Max P						(3a)	HOOP	656	16700
	GR + Max P	2138	0		1.00	1.00	(18)	SUST	3316	16700
	Cold to T1	13	45	0	1.00	1.00	(17)	DISP	66	25050
	Sus. + R1	2319	302		1.00	1.00	(18)	OCC	3813	22211
A22	Max P						(3a)	HOOP	656	16700
	GR + Max P	2	0		1.00	1.00	(18)	SUST	299	16700
	Cold to T1	0	2	0	1.00	1.00	(17)	DISP	3	25050
	Sus. + R1	3	2		1.00	1.00	(18)	OCC	302	22211
A24	Max P						(3a)	HOOP	656	16700
	GR + Max P	449	0		1.00	1.00	(18)	SUST	930	16700
	Cold to T1	2	5	0	1.00	1.00	(17)	DISP	8	25050
	Sus. + R1	487	48		1.00	1.00	(18)	OCC	1016	22211
A25 N-	Max P						(3a)	HOOP	656	16700
	GR + Max P	451	0		1.00	1.00	(18)	SUST	933	16700
	Cold to T1	2	5	0	1.00	1.00	(17)	DISP	8	25050
	Sus. + R1	489	48		1.00	1.00	(18)	OCC	1019	22211
A25 N+	Max P						(3a)	HOOP	656	16700
	GR + Max P	451	0		2.27	1.89	(18)	SUST	1739	16700
	Cold to T1	2	5	0	2.27	1.89	(17)	DISP	15	25050
	Sus. + R1	489	48		2.27	1.89	(18)	OCC	1914	22211

S101 TANKS S-101 & S-102 EXHAUSTER PIPING FLUOR DANIEL NORTHWEST, INC.
04/09/97 STRESS ANALYSIS AutoPIPE+4.60 RESULT PAGE 24

ASME B31.3c (1992) CODE COMPLIANCE

Point name	Load combination	In-Pl. Moment (Moments in ft-lb)	Out-Pl. Moment	Torsion Moment	S.I.F In	S.I.F Out	Eq. no. (Stress in psi)	Load type	Code Stress	Code Allow.
A25 F-	Max P						(3a)	HOOP	656	16700
	GR + Max P	1023	6		2.27	1.89	(18)	SUST	3569	16700
	Cold to T1	18	2	8	2.27	1.89	(17)	DISP	61	25050
	Sus. + R1	1110	65		2.27	1.89	(18)	OCC	3888	22211
A25 F+	Max P						(3a)	HOOP	656	16700
	GR + Max P	6	1023		1.00	1.00	(18)	SUST	1740	16700
	Cold to T1	2	18	8	1.00	1.00	(17)	DISP	29	25050
	Sus. + R1	64	1110		1.00	1.00	(18)	OCC	1888	22211
A26	Max P						(3a)	HOOP	656	16700
	GR + Max P	6	1021		1.00	1.00	(18)	SUST	1738	16700
	Cold to T1	8	61	8	1.00	1.00	(17)	DISP	87	25050
	Sus. + R1	191	1172		1.00	1.00	(18)	OCC	2075	22211
A27	Max P						(3a)	HOOP	656	16700
	GR + Max P	6	1019		1.00	1.00	(18)	SUST	1736	16700
	Cold to T1	13	95	8	1.00	1.00	(17)	DISP	136	25050
	Sus. + R1	296	1243		1.00	1.00	(18)	OCC	2253	22211

*** Segment A end ***

*** Segment B begin ***

Point name	Load combination	In-Pl. Moment (Moments in ft-lb)	Out-Pl. Moment	Torsion Moment	S.I.F In	S.I.F Out	Eq. no. (Stress in psi)	Load type	Code Stress	Code Allow.
A16	Max P						(3a)	HOOP	0	16700
	GR + Max P	2	11		1.88	2.17	(18)	SUST	7	16700
	Cold to T1	617	1	1	1.88	2.17	(17)	DISP	308	25050
	Sus. + R1	81	19		1.88	2.17	(18)	OCC	46	22211
B01	Max P						(3a)	HOOP	0	16700
	GR + Max P	1149	1		1.00	1.00	(18)	SUST	315	16700
	Cold to T1	0	11	1	1.00	1.00	(17)	DISP	3	25050
	Sus. + R1	1192	94		1.00	1.00	(18)	OCC	343	22211
B02	Max P						(3a)	HOOP	0	16700
	GR + Max P	28	0		1.00	1.00	(18)	SUST	8	16700
	Cold to T1	0	1	1	1.00	1.00	(17)	DISP	0	25050
	Sus. + R1	29	1		1.00	1.00	(18)	OCC	8	22211

*** Segment B end ***

SYSTEM SUMMARY

Maximum displacements (in)

Maximum X :	0.535	Point : A05	Load Comb.: TOTAL
Maximum Y :	0.632	Point : A22	Load Comb.: TOTAL
Maximum Z :	0.132	Point : A11	Load Comb.: TOTAL
Max. total:	0.725	Point : A22	Load Comb.: TOTAL

Maximum rotations (deg)

Maximum X :	0.024	Point : B02	Load Comb.: TOTAL
Maximum Y :	-0.045	Point : B02	Load Comb.: T1
Maximum Z :	0.271	Point : A22	Load Comb.: TOTAL
Max. total:	0.275	Point : A22	Load Comb.: TOTAL

Maximum restraint forces(lb)

Maximum X :	210	Point : A12	Load Comb.: R1
Maximum Y :	953	Point : A27	Load Comb.: TOTAL
Maximum Z :	174	Point : A12	Load Comb.: TOTAL
Max. total:	962	Point : A27	Load Comb.: TOTAL

Maximum restraint moments(ft-lb)

Maximum X :	309	Point : A27	Load Comb.: TOTAL
Maximum Y :	134	Point : A00	Load Comb.: TOTAL
Maximum Z :	1148	Point : A27	Load Comb.: TOTAL
Max. total:	1195	Point : A27	Load Comb.: TOTAL

SYSTEM SUMMARY

Maximum pipe forces (lb)

Maximum X :	448	Point : A12	Load Comb.: TOTAL
Maximum Y :	953	Point : A27	Load Comb.: TOTAL
Maximum Z :	104	Point : A00	Load Comb.: TOTAL
Max. total:	962	Point : A27	Load Comb.: TOTAL

Maximum pipe moments (ft-lb)

Maximum X :	1193	Point : B01	Load Comb.: TOTAL
Maximum Y :	866	Point : A16	Load Comb.: TOTAL
Maximum Z :	3116	Point : A20	Load Comb.: TOTAL
Max. total:	3144	Point : A20	Load Comb.: TOTAL

S Y S T E M S U M M A R Y

Maximum sustained stress

Point	: A20
Stress psi	: 4400
Allowable psi	: 16700
Ratio	: 0.26
Load combination	: GR + Max P

Maximum displacement stress

Point	: A14
Stress psi	: 498
Allowable psi	: 25050
Ratio	: 0.02
Load combination	: Cold to T1

Maximum occasional stress

Point	: A20
Stress psi	: 5009
Allowable psi	: 22211
Ratio	: 0.23
Load combination	: Sus. + R1

Maximum hoop stress

Point	: A15
Stress psi	: 952
Allowable psi	: 16700
Ratio	: 0.06
Load combination	: Max P

Maximum sustained stress ratio

Point	: A20
Stress psi	: 4400
Allowable psi	: 16700
Ratio	: 0.26
Load combination	: GR + Max P

Maximum displacement stress ratio

Point	: A14
Stress psi	: 498
Allowable psi	: 25050
Ratio	: 0.02
Load combination	: Cold to T1

S Y S T E M S U M M A R Y

Maximum occasional stress ratio

Point	: A20
Stress psi	: 5009
Allowable psi	: 22211
Ratio	: 0.23
Load combination	: Sus. + R1

Maximum hoop stress ratio

Point	: A15
Stress psi	: 952
Allowable psi	: 16700
Ratio	: 0.06
Load combination	: Max P

* * * The system satisfies ASME B31.3 code requirements * * *
* * * for the selected options * * *

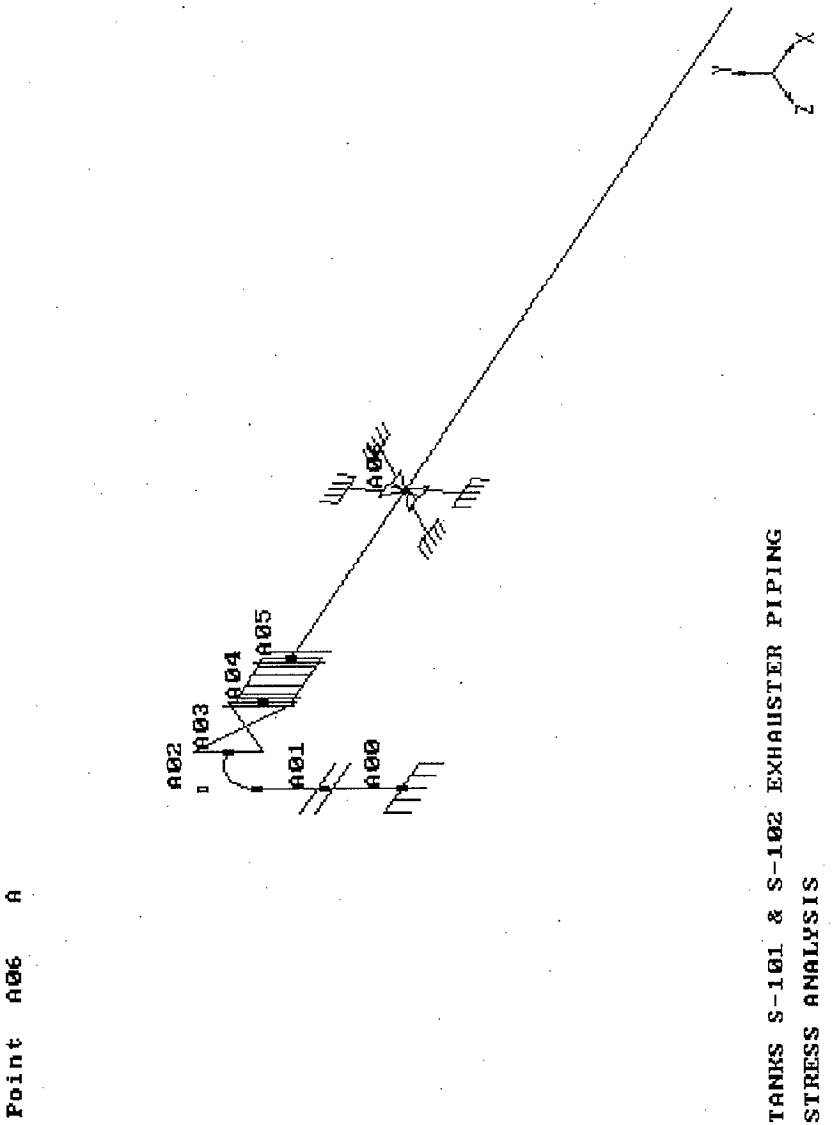

TANKS S-101 & S-102 EXHAUSTER PIPING
STRESS ANALYSIS

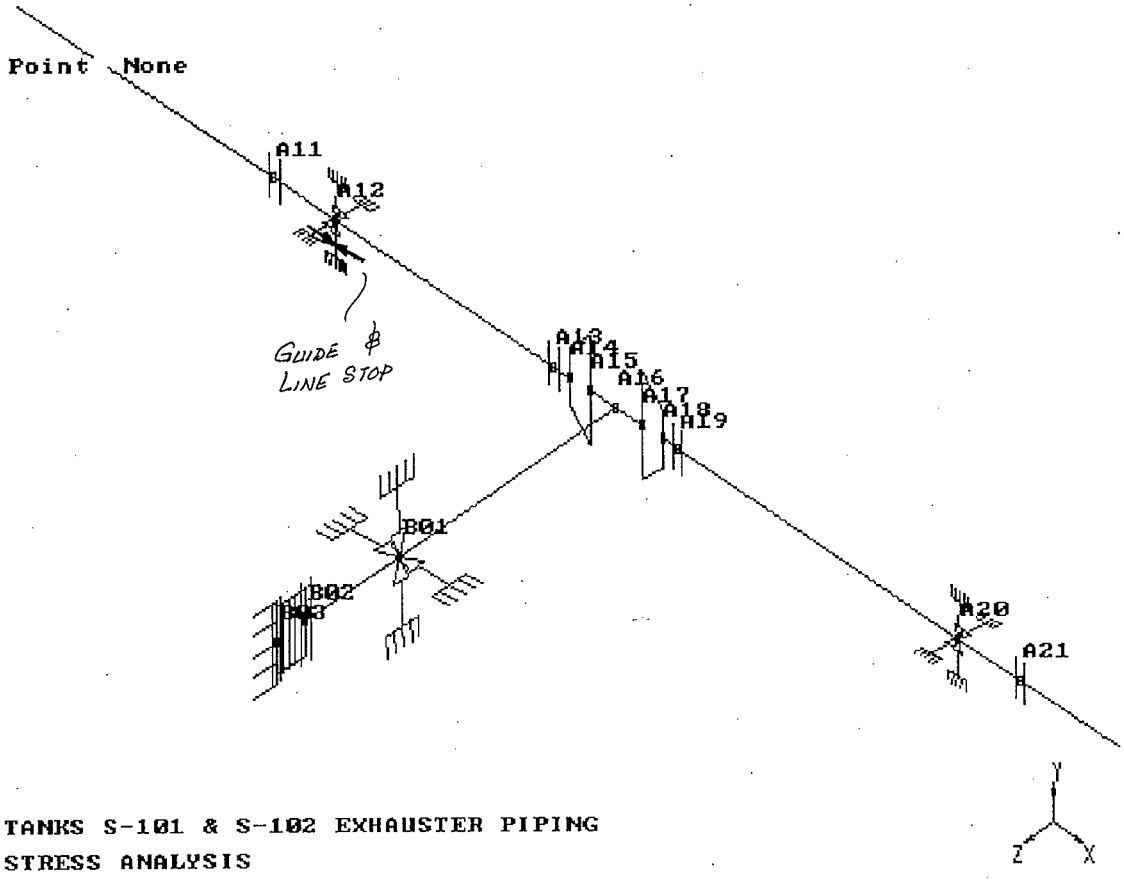

TANKS S-101 & S-102 EXHAUSTER PIPING
STRESS ANALYSIS

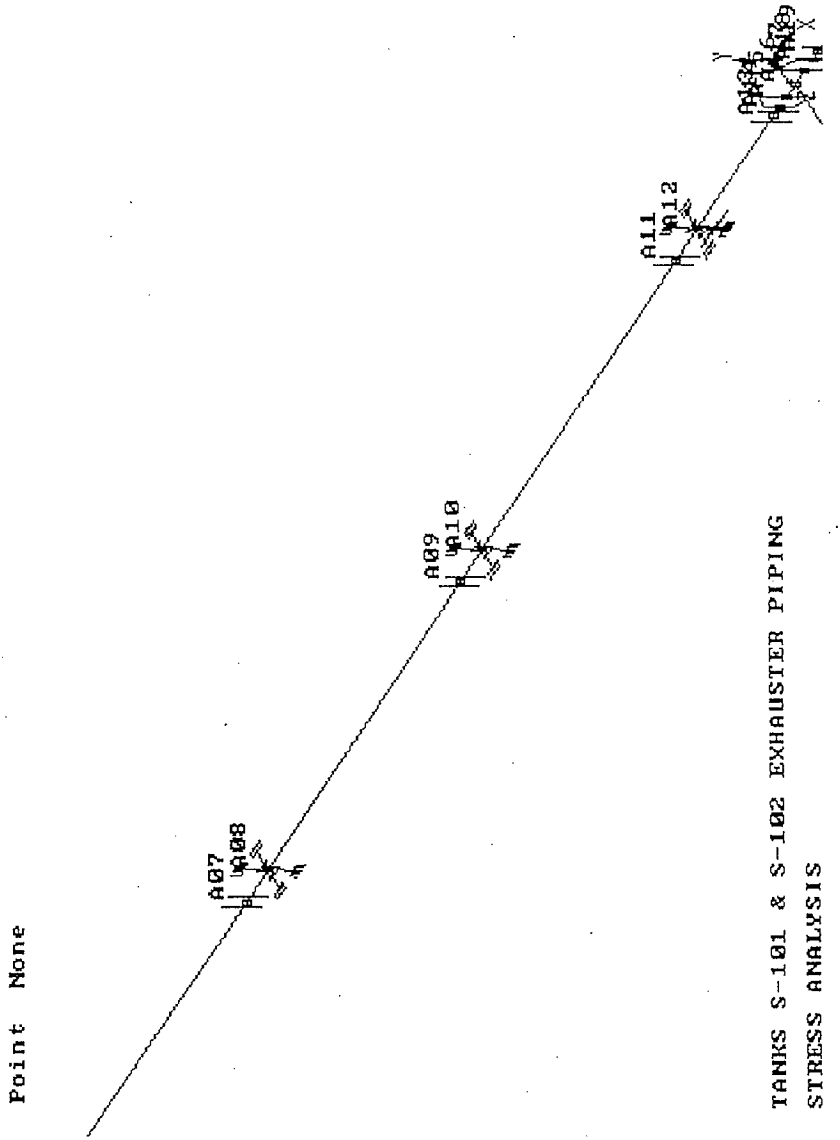
Point None
A07
A08
A09
A10
A11
A12
TANKS S-101 & S-102 EXHAUSTER PIPING
STRESS ANALYSIS

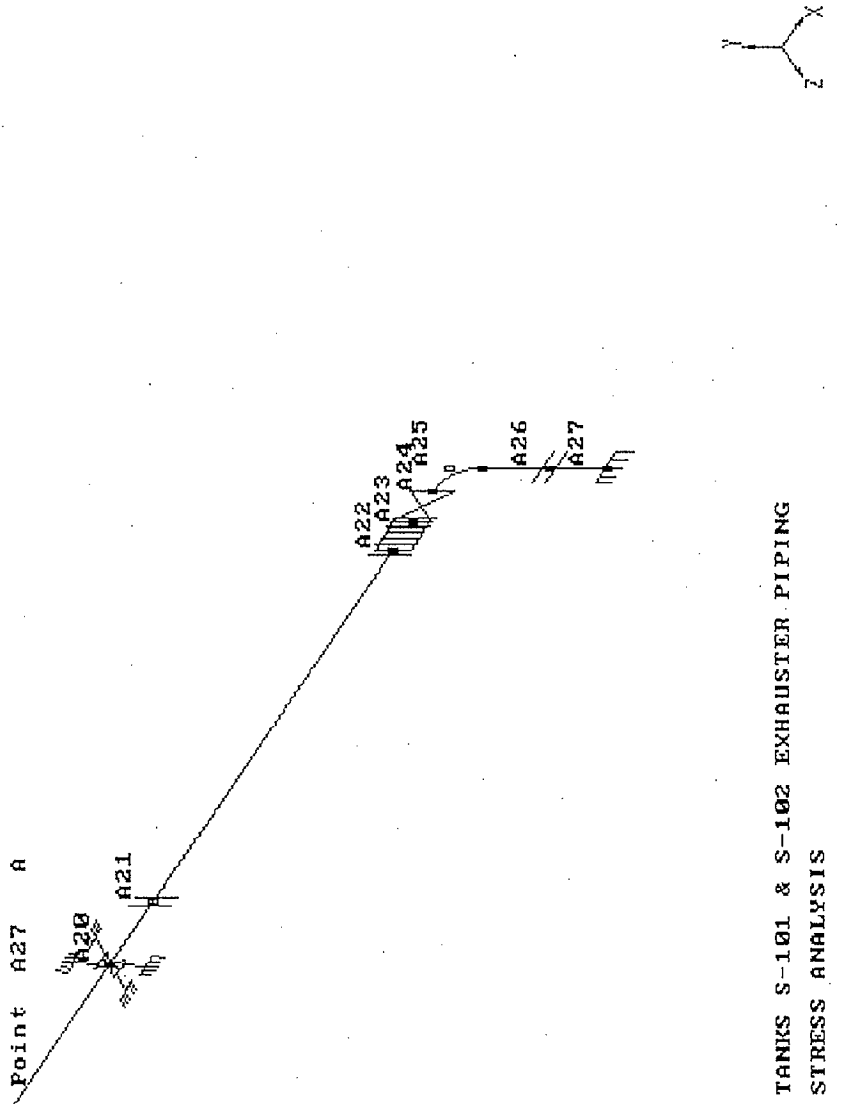

TANKS S-101 & S-102 EXHAUSTER PIPING
STRESS ANALYSIS

APPENDIX F: JUSTIFICATION FOR ELECTRICAL SUPPLY AND DISTRIBUTION

General

This appendix documents the electrical installation design for the subject saltwell exhauster units. The onsite fabricated 500 CFM exhauster requires a 3 phase, 480 VAC, 30 ampere service. (Empirical testing of the 500 CFM unit indicates that the maximum load is less than 15 amps at 480VAC.) The offsite fabricated 1000 CFM unit requires a 3 phase, 480 VAC, 60 ampere service. The cable sizing calculations for each installation design are based upon this information and which exhauster unit is being utilized.

Existing power distribution equipment was employed for each of the installations. Fuse or circuit breaker size has been revised to match the individual requirements. Because the facilities being serviced are essentially de-activated (with corresponding reductions in electrical loads from active status) it was not deemed necessary to do a rigorous electrical loading analysis on each of the sources.

Where possible, existing electrical cable has been used to provide the necessary power. In locations where new cables are required, the emphasis was directed at using temporary raceway (Yellow Jacket) where appropriate or installing exposed conduit where it was viable. Buried conduit is the least economical of the options and was employed only when necessary.

All installations are to be in accordance with the current edition of the National Electrical Code. The exhauster skids are to be grounded to the nearest above-ground equipment ground and the exhaust duct will be bonded across each of the flange faces.

241-S-109 SALTWELL EXHAUSTER ELECTRICAL INSTALLATION

1. 500 CFM exhauster at 241-S-109 (single service).

2. Field work by R Larson identified an existing cable from MCC-2 in 241-S-271 to the pump control cabinet at tank S-108. This cable can be extended from S-108 to S-109 using Yellow Jacket. The existing, direct burial cable is 3/C #10AWG (NEC rated for 30A).

3. MCC-2, cubicle E5 has 30A F.S. with 10 amp fuses and a motor starter for a 1 ½ hp jet pump at S-108 (now out of service.) To use this, replace the existing 10A fuses with 30A fuses and bypass the motor starter which is not needed in this installation.

4. V_d (Voltage drop) = (Resistance/Kft)(L in Kft)(Current)(square root 3)
Per NEC table 8: #10AWG = 1.24 ohms/K ft
#8AWG = .778 ohms/K ft
#6AWG = .491 ohms/K ft

V_d from MCC to S-108 based upon ≈ 300' direct burial cable length.

V_d = (1.24)(.3)(30)(1.73) = 19.3V This is too high (should be within 3% of 480 = 14.4V)

EXCEPTION: In order to evaluate the acceptability of the existing #10AWG cable, re-calculate the voltage drop using the actual load.

V_d = (1.24)(.3)(15)(1.73) = 9.7 Acceptable.

V_d from S-108 to S-109 using ≈ 150' and 3/C #8AWG Tray cable.

V_d = (.778)(.15)(15)(1.73) = 3.0V

Total voltage drop ≈ 12.7 volts which is acceptable.

241-SX-102 & 103 SALTWELL EXHAUSTER ELECTRICAL INSTALLATION

1. Install 500 CFM exhauster to service SX-102 & 103.

2. Field work by R Larson identified existing cable from MCC-1 in 241-S-271 to the pump control panel at tank SX-103. This cable is #6AWG (NEC rated for 65 amps) from MCC-1 cubicle C1. The cable can be extended from the pump control panel to the exhauster using Yellow Jacket.

3. MCC-1 cubicle C1 is equipped with a 100A frame circuit breaker rated at 15A. This can be replaced with a unit rated for 60A and the cable separated at the pump control panel using fused disconnects to provide both the existing load and the new exhauster load.

4. V_d (Voltage drop) = (Resistance/Kft)(L in Kft)(Current)(square root 3)
   Per NEC table 8: #10AWG = 1.24 ohms/K ft
   #8AWG = .778 ohms/K ft
   #6AWG = .491 ohms/K ft

   V_d from MCC to S-103 based upon ≈ 400' direct burial cable length.

   V_d = (.491)(.4)(60)(1.73) = 20.4V This is too high (should be within 3% of 480 = 14.4V)

   EXCEPTION: In order to evaluate the acceptability of the existing #6AWG cable, re-calculate the voltage drop using the actual load. (15 for exhauster and 15 existing load.)

   V_d = (.491)(.4)(30)(1.73) = 10.2 Acceptable.

   V_d from S-103 JB to exhuaster using ≈ 50' and 3/C #8AWG Tray cable.

   V_d = (.778)(.05)(15)(1.73) = 1.0V

   Total voltage drop ≈ 11.2 volts which is acceptable.

241-BY-105 & 106 SALTWELL EXHUASTER ELECTRICAL INSTALLATION

1. 500 CFM exhauster to service BY 105 & 106.

2. Field work identified existing welding receptacle at the central switching station adjacent to tanks 105 and 106. This welding receptacle is fed from a fused disconnect switch mounted in the central switching station.

3. Remove the existing 20 Amp fuses from the fused disconnect switch and replace with 30 amp fuses. Disconnect the existing welding receptacle and connect the power cable for the exhauster to the fused disconnect switch.

4. V_d (Voltage drop) = (Resistance/Kft)(L in Kft)(Current)(square root 3)
   Per NEC table 8: #10AWG = 1.24 ohms/K ft
   #8AWG = .778 ohms/K ft
   #6AWG = .491 ohms/K ft

   V_d from fused disconnect to the exhuaster at BX-105 at ≈ 100 feet of 3/C #8 AWG cable.

   V_d = (.778)(.1)(30)(1.73) = 4.0V Acceptable

241-S-107 and 241-S-101 & 102 SALTWELL EXHAUSTERS ELECTRICAL INSTALLATION

1. Install 1000 CFM exhauster to service tank S-107 and a 1000 CFM exhauster to service tanks S-101 & 102. (60 amp per unit)

2. There is no power available near either of the subject locations. It was decided to install new raceway and circuit from the 241-S-171 MCC #1 into S farm. The transfer line berm is to the east of the 271 building. The new raceway will be buried adjacent to the 271 building to accomodate the existing traffic pattern. After the traffic area is crossed, the conduit will be installed on precast footings. It is the intent of the design to install the conduit adjacent to the berm to provide protection for the conduit.

3. MCC #1 cubicle #B3 is out of service. Replace the existing 100AF, 15AT circuit breaker with 150AF, 125AT (Cutler Hammer #FDB3125) to provide up to 120 amp service for the exhausters.

4. V_d (Voltage drop) = (Resistance/Kft)(L in Kft)(Current)(square root 3)
Per NEC table 8: #6AWG = .491 ohms/K ft
#1 AWG = .154 ohm/K ft
V_{d1} from MCC to the pull box adjacent to tank S-107. (Approximately 225', #1AWG - rated for 130Amps). Calculated with full load.

V_{d1} = (.154)(.225)(120)(1.73) = 7.2V

V_{d2} from S107 pull box to pull box at S-101. (Approximateluy 225', #1 AWG) Calculated at 60 amps.

V_{d2} = (.154)(.225)(60)(1.73) = 3.6V

V_{d3} from pull box to exhauster unit. (Both units are approximately the same distance [≈60'] from the pull box. Both will be wired with #6 AWG tray cable.)

V_{d3} = (.491)(.06)(60)(1.73) = 3.1V

Total voltage drop from MCC to S-107 ≈ 10.3 volts (Acceptable)

Total voltage drop from MCC to S-101/102 ≈ 13.9 volts (Acceptable)