CONF-9606252--1
ANL/ASD/CP--90059

The Advanced Photon Source (APS) Linear Accelerator as a Source of Slow Positrons *

RECEIVED
JUL 23 1996
OSTI

Marion M. White and Eliane S. Lessner

Argonne National Laboratory, Argonne, IL 60439 USA

Abstract. The Advanced Photon Source [1] linear accelerator (linac) system consists of a 200-MeV, 2856-MHz S-band electron linac, a 2-radiation-length-thick tungsten target for positron production, and a 450-MeV positron linac [2]. The linac is briefly described, and some possibilities for its use as a slow positron source are discussed.

I. INTRODUCTION

The APS electron linac is designed to accelerate 30-ns-long pulses containing 50 nC of charge to an energy of 200 MeV at 48 pulses per second. The 500-W beam impinges on a 7-mm-thick water-cooled tungsten target that serves as a positron converter. Pair-produced positrons and electrons are refocused by a 1.5-T pulsed coil and directed into the positron linac where, during normal operation, they are captured and accelerated to 450 MeV. Electrons can be accelerated to 650 MeV when the target is withdrawn. The linac is shown in Figure 1. In the figure, the electron and positron linac sections are displayed parallel to each other for clarity. The linac is utilized to fill the APS storage ring and can then be used for other purposes, including slow positron production, between fills or top-off operations. The nominal electron beam power of 500 W can be increased to as much as 90 kW for slow positron production, however safe handling of this beam power presents challenges. The actual maximum beam power may have to be limited to less than 90 kW to ensure safe operation of the facility.

II. LINAC DESCRIPTION

The APS linac produces electrons with energy up to 650 MeV or positrons with energy up to 450 MeV as noted in Table 1. Electrons are emitted from a thermionic cathode in an electron gun. The nominal pulse length is 30 ns, but the system is capable of producing longer pulses. Electrons exit the gun at 100 keV and are bunched before entering the first of 14 3-m-long, SLAC-type accelerating structures that make up the remainder of the linac. The upstream accelerating structure in each linac section is directly powered by a 35-MW klystron, while the remaining 12 structures are powered in groups of four by a klystron and SLED (SLAC Energy Doubler) cavity assembly. Power to the klystrons is

* Work supported by U.S. Department of Energy, Office of Basic Energy Sciences under Contract No. W-31-109-ENG-38.

DISTRIBUTION OF THIS DOCUMENT IS UNLIMITED

MASTER

The submitted manuscript has been authored by a contractor of the U. S. Government under contract No. W-31-109-ENG-38. Accordingly, the U. S. Government retains a nonexclusive, royalty-free license to publish or reproduce the published form of this contribution, or allow others to do so, for U. S. Government purposes.

DISCLAIMER

Portions of this document may be illegible in electronic image products. Images are produced from the best available original document.

provided by 100-MW line-type pulse modulators. Relative timing and phasing of each klystron and SLED are independently adjustable.

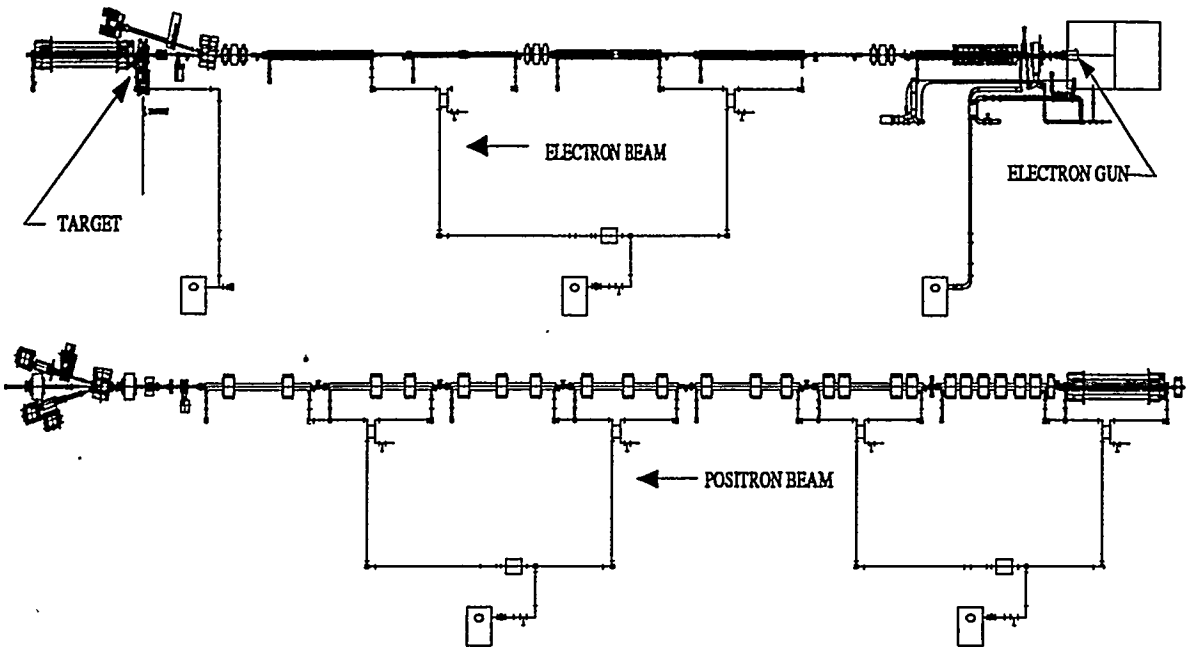

Figure 1: Schematic overview of the electron and positron linacs.

Table 1: Linac Performance Summary

	Design Goal	Achieved
Electron Linac		
Energy on Target	200 MeV	240 MeV
Pulse Length	30 ns	30 ns
Target Spot Size	$\varphi \leq 3$ mm	$\varphi \leq 5$ mm
Power on Target	480 W	390 W
Current on Target	1.7 A	>2 A
Repetition Rate	48 pps at a 60-Hz rate	30 Hz beam, 60 Hz rf
Maximum Energy	650 MeV	655 MeV
Energy Spread	± 8 %	≤ ± 8 %
Emittance	≤ 1.2 mm mrad	≤ 1.2 mm mrad
Positron Linac		
Output Energy	450 MeV	458 MeV
Output Current	8 mA	14 mA
Energy Spread	± 1 %	≤ ± 1.6 %

The SLED cavities can be detuned, thereby allowing the full klystron pulse, nominally

5 μs, to be used. The maximum beam energy with SLEDs detuned and without heavy beam loading was measured to be about 400 MeV. Measurements that will determine the maximum accelerated pulse length with reasonable energy spread are scheduled. Table 2 lists a possible set of parameters resulting in 90 kW of beam power.

Table 2: A possible set of parameters resulting in a beam power of 90 kW.

Current	Energy	Rep. Rate	Pulse Length	Power
1.5 A	400 MeV	60 Hz	2.5 μs	90 kW

III. TARGET SYSTEMS

Simulation of various target configurations has begun, and moderator studies will begin soon. EGS4 [3,4] is used to simulate electromagnetic interactions. The target and moderator will probably be constructed of tungsten, and may be composed of several sub-units so as to facilitate creation of multiple slow-positron beamlines as was proposed elsewhere [5]. Figure 2 shows three possible locations for the target-moderator system. Position C is most desirable from a radiation safety standpoint.

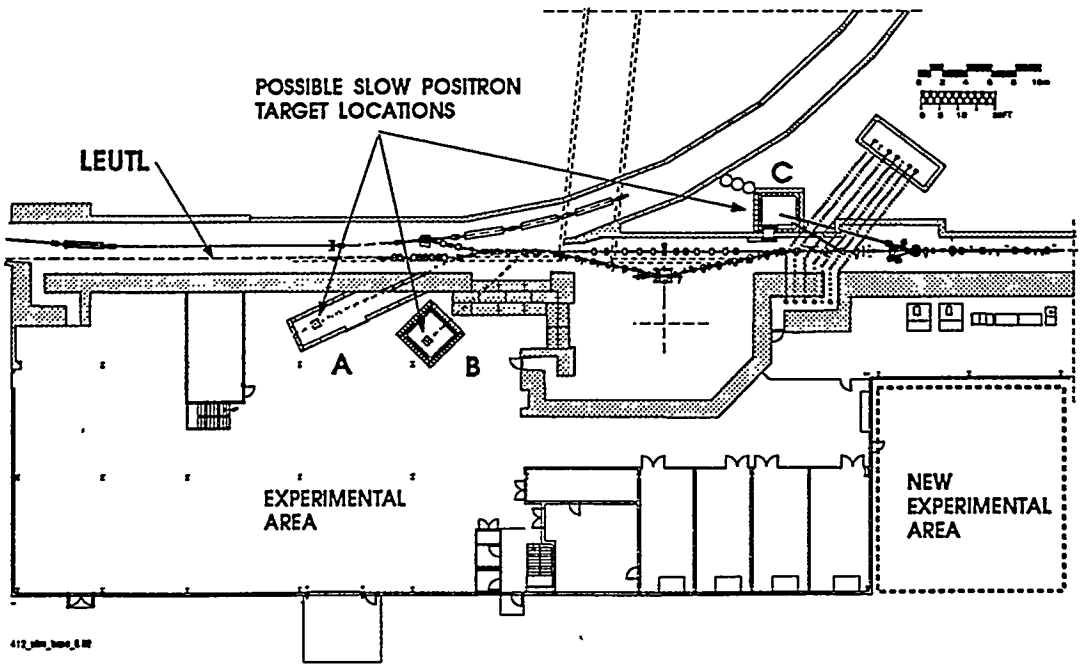

Figure 2: Overview of the injector area, including possible locations for a slow positron target and experimental area.

Under standard linac operating conditions, radiation in areas potentially occupied by personnel is low [6]. The higher beam powers associated with this facility lead to

radiation safety issues that must be addressed in order to proceed. The shielded target vault, with walls constructed of a minimum of 25.4 cm of steel surrounded by concrete and earth, will be located underground. The target will most likely be contained within a sealed box to minimize release of radioactive gas. The vault will be vented through a HEPA filter, and exhausts will be monitored. The self-contained target cooling system will be located within the vault and communicate with the outside via a heat exchanger.

The high-power electron beamline will be equipped with diagnostics to constantly monitor the transport efficiency and stop the beam if necessary. Beam size at the target will be monitored to ensure that beam size and shape remain within specifications.

The linac is controlled by the Experimental Physics and Industrial Control System (EPICS) [7] which is an extremely flexible system with powerful tools for monitoring and control. Additional monitors and controls can easily be constructed for slow positron beamlines. Interfaces to the safety interlock system must also be designed and approved.

IV. SUMMARY

The APS linac has been operational for about two years and has met its design goals. It will be possible to utilize the linac for other purposes, including slow positron production, between storage ring fills. Creation of a 90kW electron beam for slow positron production appears feasible, although safety issues must be addressed.

V. ACKNOWLEDGMENTS

The authors acknowledge Y. L. Qian's initial involvement with this effort, L. Emery for his Shower 1.0 interface to EGS4, K. J. Peterson for architectural drawings, and J. N. Galayda and L. C. Teng for enthusiastic support.

VI. REFERENCES

[1] 7-GeV Advanced Photon Source Conceptual Design Report, ANL-87-15, April 1987.
[2] M. White, et al., Performance of the Advanced Photon Source (APS) Linear Accelerator," Proc. of the 1995 Particle Accelerator Conf., 1-5 May 1995, Dallas, TX, pp. 1073-1075 (1996).
[3] W. R. Nelson, H. Hirayama and W. O. Rogers, "The EGS4 Code System," SLAC-265, UC-32, SLAC, December 1985.
[4] L. Emery, private communication.
[5] S. Okada and H. Sunaga, "Design of an intense slow positron beam production system using a 100 kW electron linac for the Positron Factory," *Nucl. Instrum. and Methods* **B 56/57**, 604 (1991).
[6] H. J. Moe, V. R. Veluri, J. Vacca, and M. White, "Radiation Measurements at the Advanced Photon Source (APS) Linear Accelerator," Proc. of the 1995 Particle Accelerator Conf., 1-5 May 1995, Dallas, TX, pp. 1064-1066 (1996).
[7] L. Dalesio, et al., "The experimental physics and industrial control system architecture: Past, present and future," *Nucl. Instrum. and Methods* **A 352**, 179 (1994).