UCRL-JC- 123155
PREPRINT

CONF-9606229--5

Performance and Analysis of Absorption Experiments on X-ray Heated Low-Z Constrained Samples

R. W. Lee, R. Cauble, T. S. Perry, P. T. Springer, D. F. Fields,
D. R. Bach, F. J. D. Serduke, C. A. Iglesias, F. J. Rogers, J. K. Nash,
M. H. Chen, B. G. Wilson, W. H. Goldstein, R. A. Ward,
J. D. Kilkenny, R. Doyas, L. B. Da Silva, C. A. Back
Lawrence Livermore National Laboratory
Livermore, CA 94550

S. J. Davidson, J. M. Foster, C. C. Smith
AWE Aldermaston, Reading RG7-4PR, United Kingdom

RECEIVED
JUL 15 1996
OSTI

This paper was prepared for submittal to the
24th European Conference on Laser Interaction with
Matter, Madrid, Spain, June 3-7, 1996

May 1996

Lawrence Livermore National Laboratory

This is a preprint of a paper intended for publication in a journal or proceedings. Since changes may be made before publication, this preprint is made available with the understanding that it will not be cited or reproduced without the permission of the author.

MASTER

DISCLAIMER

This document was prepared as an account of work sponsored by an agency of the United States Government. Neither the United States Government nor the University of California nor any of their employees, makes any warranty, express or implied, or assumes any legal liability or responsibility for the accuracy, completeness, or usefulness of any information, apparatus, product, or process disclosed, or represents that its use would not infringe privately owned rights. Reference herein to any specific commercial product, process, or service by trade name, trademark, manufacturer, or otherwise, does not necessarily constitute or imply its endorsement, recommendation, or favoring by the United States Government or the University of California. The views and opinions of authors expressed herein do not necessarily state or reflect those of the United States Government or the University of California, and shall not be used for advertising or product endorsement purposes.

PERFORMANCE AND ANALYSIS OF ABSORPTION EXPERIMENTS ON X-RAY HEATED LOW-Z CONSTRAINED SAMPLES

R. W. LEE, R. CAUBLE, T. S. PERRY, P. T. SPRINGER, D. F. FIELDS, D. R. BACH, F. J. D. SERDUKE, C. A. IGLESIAS, F. J. ROGERS, J. K. NASH, M. H. CHEN, B. G. WILSON, W. H. GOLDSTEIN, R. A. WARD, J. D. KILKENNY. R. DOYAS, L. B. DA SILVA, C. A. BACK,

Lawrence Livermore National Laboratory
Livermore, California 94550 USA

S. J. DAVIDSON, J. M. FOSTER, C. C. SMITH

AWE Aldermaston
Reading RG7-4PR, United Kingdom

Results of experiments on the absorption of niobium in a hot, dense plasma are presented. These results represent a major step in the development of absorption techniques necessary for the quantitative characterization of hot, dense matter. A general discussion is presented of the requirements for performing quantitative analysis of absorption spectra. Hydrodynamic simulations are used to illustrate the behavior of tamped x-ray-heated matter and to indicate effects that can arise from the two dimensional aspects of the experiment. The absorption spectrum of a low-Z material, in this case aluminum, provides a temperature diagnostic and indicates the advance of the absorption measurement technique to the level of application. The experimental technique is placed in context with a review of other measurements using absorption spectroscopy to probe hot, dense matter.

1 Introduction

Intense lasers can be used to irradiate high-Z targets producing x-ray fluxes that can volumetrically heat materials to substantial temperatures. This x-ray flux produces a state of high energy density matter that can be studied by absorption spectroscopy to yield detailed information.[1] The theoretical and experimental investigation of the x-ray absorption characteristics of these plasmas is an active field of research with applications in astrophysics, inertial fusion, and x-ray laser production.[1-4]

The study of plasma radiative properties requires the simultaneous measurements of the temperature, density, and the absorption, or emission, spectrum. The lack of simultaneity has been a weakness of most absorption measurements. Some experiments have relied on hydrodynamics simulations to infer the plasma temperature and density, while others provide measurements of the temperature, density and absorption spectrum, but on separate experiments.

DISTRIBUTION OF THIS DOCUMENT IS UNLIMITED

Here we describe the development of a technique that allows the simultaneous measurements of the temperature, density, and absorption spectrum. This is made possible by two significant modifications of previous experiments. First, the density is obtained by employing a second spectrometer to monitor the sample expansion. Second, a mixture of niobium and aluminum is used, to determine the temperature from the absorption spectrum of aluminum, which occurs in a spectral region distinct from niobium. The temperature can be determined with an error of less than 3% by using detailed spectroscopic models to reproduce the observed aluminum absorption spectrum.[1]

2 Experiment and Results

In this measurement we want to provide benchmark data for LTE opacity codes for a moderate-Z element, niobium. We require, in addition to the absorption spectrum, four pieces of information on the sample itself: 1) the temperature; 2) the density; 3) the sample uniformity; and the 4) degree of deviation from LTE. The sample uniformity and deviation from the LTE state have addressed previously.[1] Here we have improved on past experiments by making temperature and density measurements simultaneous with the absorption measurement. The density measurement is performed with side-on imaging of the sample expansion, while the temperature is inferred from the absorption of the K-shell aluminum co-mixed with the niobium; see Fig. 1. The temperature measurement requires a theoretical model to derive a fundamental character of the sample from the observable, *i.e.*, the spectrum.

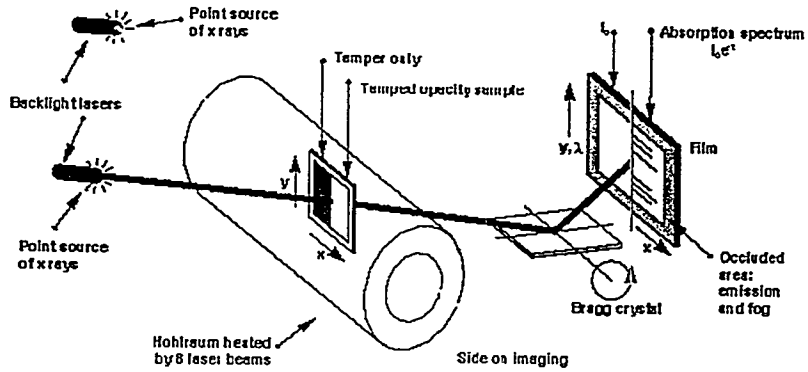

Figure 1: Schematic of the experiment designed to allow quantitative analysis of the absorption spectrum. The key elements are the two backlightts the sandwich target, and two spectrometers.

Sample uniformity is guaranteed by the use of full tamping. The Ni/Al mixture was 3400 Å thick (seen in the direction of the transmission measurement). On both sides of the sample 1500 Å of CH was deposited. In addition, 100-μm-thick foils of CH were attached to n the "ends" of the sample (viewing in the direction of the density measurement). Simulations of the arrangement showed very small temperature and density gradients over the course of the measurement interval, roughly one ns. The heating source was a large gold hohlraum into which eight beams of the Nova laser were focused (the remaining two beams drove the two backlighter fibers). The arrangement is similar to a previous point projection spectroscopy experiment.[5]

Data from the side-on spectrometer showed the sample width from Al absorption features as 4.8±0.4 μm at the time of interest, in agreement with a continuum measurement. Correcting for magnification and source size and given the initial sample areal density, a density of 26±5 mg/cm^3 was obtained.

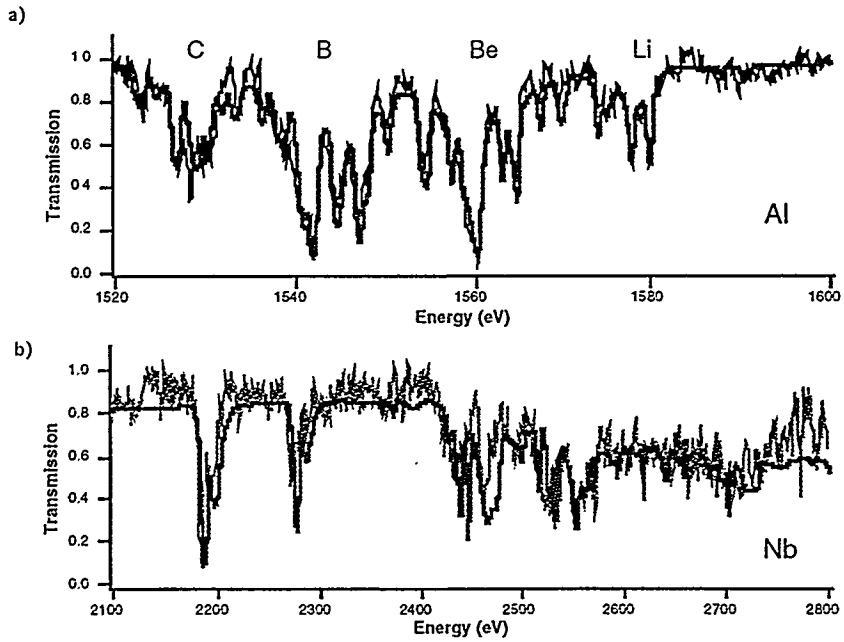

Figure 2: Comparison of the absorption data with calculation shown as transmission versus energy in eV. The calculations are shown as solid lines while the measurements are overlaid as gray lines. In a) the aluminum spectrum was found to match the OPAL opacity code best at a temperature of 48 eV. In b) the STA model was used to calculate the Nb opacity at the temperature and density determined by the experiment.

The transmission spectrometer contained two PET crystals, one for Al (2-3 keV range) and one for Nb (1.5-1.6 keV). Fig 2 shows the reduced Al and Nb data. For Al, the opacity code OPAL[6] was used to determine the temperature given the measured density. The theoretical spectrum is sensitive to small changes in temperature but is a weak function density, providing the link between the absorption spectrum and the temperature. In this way the temperature was determined to be 48±2 eV. The weak functional dependence of the transmission on density, which is uncertain to 20%, introduces only 1 eV of the total error. With the temperature accurate to better than ±5% and the density determined to 20%, it is possible to make quantitative comparisons between the experimental results for niobium and the theoretical calculations for the opacity. In Fig 2b, the STA code[7] was used to provide a comparison with the Nb spectrum at 48 eV and 26 mg/cm^3.

The experimental arrangement described above provides a method to quantitatively characterize the state of a hot dense plasma. to within a few percent. In the experiment reported here, sample density and temperature were obtained simultaneously with the transmission measurement. The independent density measurement together with the inferred temperature provide sufficient characterization of the sample to allow for a quantitative comparison between experiment and theoretical models of the niobium transmission spectrum. The method offers substantial improvements over previous methods of evaluating plasma opacities. Individual areas of improvement, such as extraneous signal measurement, measure of the backlight, measurement of the transmission spectrum and reduction of the data will be treated in a future publication.

Acknowledgments

Work performed under the auspices of the U. S. Department of Energy by LLNL under contract number W-7405-ENG-48.

References

1. T. S. Perry *et al., Phys.Rev. Lett.* **67**, 3784 (1992); J. Edwards *et al., EuroPhys. Lett.*, **11**, 631 (1991); P. Stringer *et al., Phys.Rev. Lett.* **69**, 3735 (1992).
2. S. J. Davidson *et al., Phys. Rev. Lett.* **67**, 3255 (1991).
3. L. B. Da Silva *et al., Phys. Rev. Lett.* **69**, 438 (1992).
4. J. Bruneau *et al., Phys. Rev. A.* **44**, R832 (1991).
5. T. S. Perry *et al., J. Spectrosc. Rad. Transf.* **54**, 317 (1995).
6. F. J. Rogers and C. A. Iglesias, *Astrophys. J. Supp.* **79**, 507 (1992).
7. A. Bas-Shalom, J. Oreg and W. H. Goldstein in *Radiative Properties of Hot Dense Matter*, eds. W. H. Goldstein, C. F. Hooper, Jr, J.-C. Gauthier, J. R. Seely and R. W. Lee (World Scientific, Singapore, 1991).

Technical Information Department • Lawrence Livermore National Laboratory
University of California • Livermore, California 94551