*** RMIS View/Print Document Cover Sheet ***

This document was retrieved from the Boeing ISEARCH System.

Accession #: D196050277

Document #: SD-TP-SEP-035

Title/Desc:
SAFETY EVALUATION FOR PACKAGING FOR ONSITE TRANSFER OF PLUTONIUM RECYCLE TEST REACTOR ION EXCHANGE COLUMNS

COMPLETE

ENGINEERING CHANGE NOTICE

1. ECN № 621467

Proj. ECN

2. ECN Category (mark one)	3. Originator's Name, Organization, MSIN, and Telephone No.	3a. USQ Required?	4. Date
Supplemental [] Direct Revision [X] Change ECN [] Temporary [] Standby [] Supersedure [] Cancel/Void []	ME Burnside/84300/G2-02/ 376-7858	[] Yes [X] No	09-11-95
	5. Project Title/No./Work Order No. SEP for Onsite Transfer of Plutonium Recycle Test Reactor Ion Exchange Columns	6. Bldg./Sys./Fac. No. 309 Building Ion Exchange Columns	7. Approval Designator SQ
	8. Document Numbers Changed by this ECN (includes sheet no. and rev.) WHC-SD-TP-SEP-035, Rev. ~~1~~ 0 MEB	9. Related ECN No(s). NA	10. Related PO No. NA

11a. Modification Work	11b. Work Package No.	11c. Modification Work Complete	11d. Restored to Original Condition (Temp. or Standby ECN only)
[] Yes (fill out Blk. 11b) [X] No (NA Blks. 11b, 11c, 11d)	NA	NA Cog. Engineer Signature & Date	NA Cog. Engineer Signature & Date

12. Description of Change

This ECN is a result of filling the subject boxes with excessive grout. The resulting deflection near the lid to box mating surfaces prevents closure using the lid.

Correcting the excessive grout condition is not ALARA because of the exposure (dose) to personnel involved in correcting the condition. Therefore, the purpose of this ECN is to document the safety and structural integrity of the over weight boxes containing ion exchange columns and grout when shipped without the box lids.

See pages 3 through 7 of this ECN for specific changes (changes 1. through 37.) to WHC-SD-TP-SEP-035.

13a. Justification (mark one)

Criteria Change []	Design Improvement []	Environmental []	Facility Deactivation []
As-Found [X]	Facilitate Const []	Const. Error/Omission []	Design Error/Omission []

13b. Justification Details

This ECN is justified because correcting the excessive grout condition is not ALARA based on the exposure (dose) to personnel involved in correction.

This ECN confirms that the new containment boundary (the grout, the top, sides, and bottom of the box) maintains sufficient structural integrity to allow shipment of the over weight boxes without the box lids. The boxes only require plastic wrap over the exposed grout to keep the grout from contact with adverse weather conditions.

Continued on page 7.

14. Distribution (include name, MSIN, and no. of copies)

M. E. Burnside	G2-02	S. S. Shiraga	G2-02
J. G. Field	G2-02	R. J. Smith	G2-02
J. R. Green	G2-02	WHC-SD-TP-SEP-035 File	G2-02
P. W. Griffin	X5-53	Central Files	A3-88
C. R. Hoover	H4-16		
D. W. McNally	G2-02		

RELEASE STAMP

OFFICIAL RELEASE BY WHC (20)

DATE SEP 11 1995

A-7900-013-2 (11/94) GEF095

A-7900-013-1

ENGINEERING CHANGE NOTICE

1. ECN (use no. from pg. 1) 621467

15. Design Verification Required	16. Cost Impact				17. Schedule Impact (days)	
	ENGINEERING		CONSTRUCTION			
[] Yes	Additional	[NA] $	Additional	[NA] $	Improvement	[NA]
[X] No	Savings	[NA] $	Savings	[NA] $	Delay	[NA]

18. Change Impact Review: Indicate the related documents (other than the engineering documents identified on Side 1) that will be affected by the change described in Block 12. Enter the affected document number in Block 19.

SDD/DD	[]	Seismic/Stress Analysis	[]	Tank Calibration Manual	[]
Functional Design Criteria	[]	Stress/Design Report	[]	Health Physics Procedure	[]
Operating Specification	[]	Interface Control Drawing	[]	Spares Multiple Unit Listing	[]
Criticality Specification	[]	Calibration Procedure	[]	Test Procedures/Specification	[]
Conceptual Design Report	[]	Installation Procedure	[]	Component Index	[]
Equipment Spec.	[]	Maintenance Procedure	[]	ASME Coded Item	[]
Const. Spec.	[]	Engineering Procedure	[]	Human Factor Consideration	[]
Procurement Spec.	[]	Operating Instruction	[]	Computer Software	[]
Vendor Information	[]	Operating Procedure	[]	Electric Circuit Schedule	[]
OM Manual	[]	Operational Safety Requirement	[]	ICRS Procedure	[]
FSAR/SAR	[]	IEFD Drawing	[]	Process Control Manual/Plan	[]
Safety Equipment List	[]	Cell Arrangement Drawing	[]	Process Flow Chart	[]
Radiation Work Permit	[]	Essential Material Specification	[]	Purchase Requisition	[]
Environmental Impact Statement	[]	Fac. Proc. Samp. Schedule	[]	Tickler File	[]
Environmental Report	[]	Inspection Plan	[]	None	[X]
Environmental Permit	[]	Inventory Adjustment Request	[]		[]

19. Other Affected Documents: (NOTE: Documents listed below will not be revised by this ECN.) Signatures below indicate that the signing organization has been notified of other affected documents listed below.

Document Number/Revision	Document Number/Revision	Document Number Revision
NA		

20. Approvals

Signature	Date	Signature	Date
OPERATIONS AND ENGINEERING		ARCHITECT-ENGINEER	
Cog. Eng.: RJ Smith	9/11/95	PE	
Cog. Mgr.: JG Field	9/11/95	QA	
QA: CR Hoover	9/11/95	Safety	
Safety: DW McNally	9/11/95	Design	
Environ.		Environ.	
Other: ME Burnside	9/11/95	Other	
JR Green	9/11/95		
SS Shiraga	5/11/95		
PW Griffin	5/11/95	DEPARTMENT OF ENERGY	
		Signature or a Control Number that tracks the Approval Signature	
		ADDITIONAL	

12. Description of Change (continued)

The following are specific changes to WHC-SD-TP-SEP-035 as indicated on page 1, section 12. of this ECN:

Change 1. Part A, Section 1.1, paragraph 4:

Change to shielding evaluation.

Change 2. Part A, Section 1.1, paragraph 3, last sentence add:

Because deflection of the boxes near the flange of the lid, and excess grout, will require each box containing grout to be shipped without a lid. The exposed grout in these boxes will be covered with plastic as a precaution to keep the grout from being exposed to adverse weather conditions.

Change 3. Part A, Section 1.1, paragraph 5, change to read as follows:

Based on the overweight characteristics of the packaged columns, and because the lids will be left off of the Category 3 LLW boxes, the section of the road on which the shipment will be transported that normally is open to public access shall be closed to exclude the public and nonessential workers from access to the shipment.

Change 4. Part A, Section 2.5, change to the following:

The containment boundary for the category 1 LLW box is considered to be the top, bottom, and sides of the box, the neoprene gasket, and the lid. The containment boundary for the two (2) category 3 LLW boxes is considered to be the bottom and sides of the box, and the top layer of grout because each box will be shipped without a lid.

Change 5. Part A, Section 2.11, change to the following:

No sophisticated operations are required to close the box containing category 1 LLW. Box closure operations for the box containing category 1 LLW requires inserting the payload in the box then securing the gasket and lid.

Box closure operations for the two (2) boxes containing the category 3 LLW includes inserting the payload in the box then covering the top of the box with plastic.

Change 6. Part A, Section 4.2, last sentence, change to the following:

Bracing will include I beams chained to the trailer, with one I beam on all four linear sides of the boxes.

Change 7. Part A, Section 4.3, bullet 1, change to the following:

The boxes exceed the manufacturer's maximum gross weight limit of 7000 lbs. In addition, the boxes containing category 3 LLW will not have lids attached to the boxes. Therefore, the section of the road on which the shipment will be transported that is normally open to the public shall be closed to the public and non-essential workers.

Change 8. Part A, Section 4.3, bullet 6, change to the following:

The category 1 LLW box will be visually inspected to ensure that containment surfaces and the lid sealing interface have no visible breaches. The category 3 LLW boxes will be visually inspected to ensure that the exposed grout is covered with plastic, and that there are no visible breaches in the box or plastic cover.

Change 9. Part A, Section 4.3, bullet 13, first sentence, change the following:

- Change "shielding calculation" to "dose rate readings"
- Change 1.64 rem/hr to 400 mRem/hr.
- Delete "and 99 mRem/hr 1 meter from the packages."

Change 10. Part A, Section 4.3, bullet 13:

Delete last sentence

Change 11. Part A, Section 4.3, last bullet, change to the following:

The metal boxes tied down to the trailer will be handled as a wide load and as an over weight load. Therefore, the load will be specially permitted for both wide load and over weight conditions.

Change 12. Part A, Section 6.2, 4., change to the following:

Follow the manufacturer's closure instructions (as applicable) when sealing the category 1 LLW box. Ensure that the exposed grout in the category 3 LLW boxes is covered with plastic.

Change 13. Part A, Section 6.2, 5., change to the following:

A tamper indicating device is not needed because the payload is either enveloped in Pyro foam (category 1 LLW) or enveloped in grout (category 3 LLW).

Change 14. Part A, Section 7.1, bullet 3, change to the following:

Verify that the category 1 LLW box packaging closure device, including any required gasket, is properly installed, secured, and free of defects in accordance with 49 CFR 173.475(e). Verify that the category 3 LLW boxes have exposed grout covered with plastic in accordance with the requirements of this SEP.

Change 15. Part A, Section 7.1, bullet 4, add to the end of the sentence:

and in accordance with the requirements of this SEP.

Change 16. Part A, Section 7.1, bullet 5, add to the end of the sentence:

and in accordance with the requirements of this SEP.

Change 17. Part B, Section 1.1, second paragraph, change to read as follows:

The primary conditions addressed in this SEP are the following:

- The over-weight condition of the boxes as a result of filling void spaces with Pyro foam and grout.
- The lids will not be secured to the category 3 LLW boxes during transportation.
- The dose rates exceed DOT limits and Hanford Site Radiological Control Limits.

The excessive weight condition, and category 3 LLW box lid removal, are both evaluated in Part B, Sections 3.0 and 5.0 of this SEP. The dose rate conditions are addressed in Part B, Section 4.0 of this SEP.

Change 18. Part B, Section 3.3, first and second paragraph:

Separate First and Second paragraph by adding a space between them.

Change 19. Part B, Section 3.3, paragraph 3, second sentence, change to the following:

Results of the evaluation indicate that a box filled with ion exchange columns and grout will withstand a normal-condition drop without buckling or excessive deformation (see Appendix B-1).

Change 20. Part B, Section 3.3, paragraph 5, last sentence, change to the following:

However, the grout must be sufficiently cured for at least 7 days because the package does not have sufficient strength to support the load of uncured grout.

Change 21. Part B, Section 4.4, paragraph 1, first sentence and second sentence, change to the following:

Dose rates on the surface of the metal boxes were evaluated based on survey readings from the surface of each fully loaded metal box. Survey readings were evaluated against U.S. Department of Transportation (DOT) radiation level limitations.

Change 22. Part B, Section 4.5, first paragraph:

Delete

Change 23. Part B, Section 4.5, paragraph 2, change to the following:

Survey readings indicate that the surface dose rate readings of the boxes exceed DOT limitations (400 mRem/hr at the surface of the package) prescribed in Part B, Section 4.4. Survey readings at one meter from the linear side of each box (including top and bottom) will not exceed the contact dose rate for any given side of all three boxes loaded together.

Change 24. Part B, Section 4.5, paragraph 3, change to the following:

Attempting to shield the inner walls of the boxes or reposition the ion exchange columns in the boxes is contrary to ALARA principles. Therefore, if possible, configuring the boxes (if two or more boxes are loaded together) on the trailer used for transfer such that the lowest dose rate readings are exposed to the outside of the trailer is acceptable as an administrative control and method of shielding. No additional shielding is required regardless of box configuration on the trailer.

Change 25. Part B, Section 4.5, last paragraph:

Delete last sentence "See Appendix B-1 for shielding evaluation"

Change 26. Part B, Section 4.5, add new last paragraph:

Based on the source term in the boxes, the configuration of the ion exchange columns in the boxes (i.e., ion exchange columns, Pyro foam and miscellaneous waste; ion exchange columns and grout), the configuration of the boxes on the trailer(s), and the known dose rate readings at contact with the boxes (see Appendix B-1), no additional shielding analysis is required.

Change 27. Part B, Appendix B-1 (Shielding Evaluation):

Replace with 309 BLDG. Tank Farm map with waste box dose rate readings.

Change 28. Part B, Section 5.2.1, bullet 7, change to the following:

Containment Boundary: The containment boundary is the top (including neoprene gasket and lid), bottom, and sides, of the box containing ion exchange columns, Pyro foam, and miscellaneous waste. The containment boundary for the boxes containing ion exchange columns and grout is the solidified grout itself (top layer) and the sides and bottom of the box. The lid (top) of these boxes are removed.

Change 29. Part B, Section 5.2.3,

Delete, re-number in sequence.

Change 30. Part B, Section 5.2.5 (new 5.2.4), add the following sentence:

There is no positive closure mechanism required for the boxes containing grout.

Change 31. Part B, Section 5.2.7

Delete.

Change 32. Part B, Section 5.3, add the following sentence:

In addition, the boxes were analyzed with the lid removed (see new Appendix B-2).

Change 33. Part B, Section 5.4, paragraph 2, second sentence, change to the following:

Evaluation of the drop indicates that the box will withstand a normal-condition drop without buckling or excessive deformation, even with the lid removed from the boxes containing grout (see new Appendix B-2).

Change 34. Part B, Section 5.4, paragraph 4, last sentence, change to the following:

However, the grout must be cured for at least 7 days because the package does not have sufficient strength to support the load of uncured grout.

Change 35. Part B, Appendix B-2:

Add the calculation provided by S. S. Shiraga entitled "Engineering Safety Evaluation, subject: IXC Grout Drop Loading (w/o Lid)."

Change 36. Part B, Section 8.1, second sentence, change to the following:

Bracing will include I beams chained to the trailer, with one I beam on all four linear sides of the boxes for added stability to help prevent the load from shifting forward or backward, or side to side, on the trailer during transfer.

13b. Justification Details (continued)

In addition, this ECN documents the lower dose rates determined by surveying the loaded boxes which establishes a safer condition for transport in terms of exposure, and subsequently eliminates the need for shielding analysis using a bounding case.

THIS PAGE INTENTIONALLY
LEFT BLANK

RELEASE AUTHORIZATION

Document Number:	WHC-SD-TP-SEP-035, Rev. 1
Document Title:	Safety Evaluation for Packaging for Onsite Transfer of Plutonium Recycle Test Reactor Ion Exchange Columns
Release Date:	9/11/95

This document was reviewed following the procedures described in WHC-CM-3-4 and is:

APPROVED FOR PUBLIC RELEASE

WHC Information Release Administration Specialist:

V. L. Birkland 9/11/95

V. L. Birkland

TRADEMARK DISCLAIMER. Reference herein to any specific commercial product, process, or service by trade name, trademark, manufacturer, or otherwise, does not necessarily constitute or imply its endorsement, recommendation, or favoring by the United States Government or any agency thereof or its contractors or subcontractors.

To obtain copies of this report, contact:
Westinghouse Hanford Company - Document Control Services
P.O. Box 1970, Mailstop H6-08, Richland, WA 99352
Telephone: (509) 372-2420; Fax: (509) 376-4989

A-6001-400.2 (09/94) WEF256

THIS PAGE INTENTIONALLY
LEFT BLANK

SUPPORTING DOCUMENT

1. Total Pages 128

2. Title

Safety Evaluation for Packaging for Onsite Transfer of Plutonium Recycle Test Reactor Ion Exchange Columns

3. Number

WHC-SD-TP-SEP-035

4. Rev No.

1

5. Key Words

Ion Exchange Columns (IXCs)
PRTR
309 Building

6. Author

Name: R. J. Smith

Signature

Organization/Charge Code 84100/B12WD

7. Abstract

The purpose of this Safety Evaluation for Packaging (SEP) is to authorize the use of three U.S. Department of Transportation (DOT) 7A, Type A metal boxes (Capital Industries Part No. S 0600-0600-1080-0104) to package 12 Plutonium Recycle Test Reactor (PRTR) ion exchange columns as low-level waste (LLW). The packages will be transferred from the 309 Building in the 300 Area to low level waste burial in the 200 West Area.

Revision 1 of WHC-SD-TP-SEP-035 (per ECN No. 621467) documents that the boxes containing ion exchange columns and grout will maintain the payload under normal conditions of transport if transferred without the box lids.

8. RELEASE STAMP

OFFICIAL RELEASE BY WHC 20
DATE SEP 11 1995
Sta. 21

THIS PAGE INTENTIONALLY
LEFT BLANK

RECORD OF REVISION	(1) Document Number WHC-SD-TP-SEP-035	Page 1

(2) Title

Safety Evaluation for Packaging for Onsite Transfer of Plutonium Recycle Test Reactor Ion Exchange Columns

CHANGE CONTROL RECORD

(3) Revision	(4) Description of Change - Replace, Add, and Delete Pages	Authorized for Release (5) Cog. Engr.	(6) Cog. Mgr. Date
0	(7) EDT 611476, 6/21/95		
1 RS	This revision is a result of filling the subject boxes with excessive grout. This documents the safety and structural integrity of the overweight boxes containing ion exchange columns and grout when shipped without the box lids. Per ECN 621467.	RJ Smith	JG Field 9/11/95

A-7320-005 (08/91) WEF168

THIS PAGE INTENTIONALLY
LEFT BLANK

CONTENTS

PART A: DESCRIPTION AND OPERATIONS A1-1

1.0 INTRODUCTION A1-1
1.1 GENERAL INFORMATION A1-1
1.2 SYSTEM DESCRIPTION A1-2

2.0 PACKAGING SYSTEMS A2-1
2.1 CONFIGURATIONS AND DIMENSIONS A2-1
2.2 MATERIALS OF CONSTRUCTION A2-1
2.3 DESIGN AND FABRICATION METHODS A2-1
2.4 WEIGHTS AND CENTER OF GRAVITY A2-1
2.5 CONTAINMENT BOUNDARY A2-2
2.6 VOLUME (CAVITY SIZE) A2-2
2.7 HEAT DISSIPATION A2-2
2.8 SHIELDING A2-2
2.9 LIFTING DEVICES A2-2
2.10 TIEDOWN DEVICES A2-2
2.11 OPERATIONAL FEATURES A2-2

3.0 PACKAGE CONTENTS A3-1
3.1 GENERAL DESCRIPTION A3-1
3.2 CONTENTS RESTRICTIONS A3-1

4.0 TRANSPORT SYSTEM A4-1
4.1 TRANSPORT VEHICLE A4-1
4.2 TIEDOWN SYSTEM A4-1
4.3 SPECIAL TRANSFER REQUIREMENTS A4-1

5.0 ACCEPTANCE OF PACKAGING FOR USE A5-1

6.0 OPERATING REQUIREMENTS A6-1
6.1 CONTENTS RESTRICTIONS A6-1
6.2 PACKAGE CLOSURE INSTRUCTION A6-1
6.3 TRANSFER A6-2

7.0 QUALITY ASSURANCE A7-1
7.1 GENERAL REQUIREMENTS A7-1
7.2 SEP CONTROL SYSTEM A7-1

8.0 MAINTENANCE A8-1

9.0 REFERENCES A9-1

PART A APPENDIX: DRAWINGS AA-1

CONTENTS (cont)

PART B: PACKAGE EVALUATION B1-1

1.0 INTRODUCTION B1-1
1.1 SAFETY EVALUATION METHODOLOGY B1-1
1.2 EVALUATION SUMMARY AND CONCLUSION B1-1

2.0 CONTENTS EVALUATION B2-1
2.1 CHARACTERIZATION B2-1
2.2 CONTENTS DATA AND RESTRICTIONS FOR BOX CONTAINING FIVE UPPER VAULT ION EXCHANGE COLUMNS B2-3
2.2.1 Source Term B2-3
2.2.2 Total Activity B2-3
2.2.3 Waste Category B2-4
2.2.4 Dimensions B2-4
2.2.5 Total Volume B2-5
2.2.6 Gross Weight B2-5
2.3 CONTENTS DATA AND RESTRICTIONS FOR METAL BOX CONTAINING THREE LOWER VAULT COLUMNS B2-6
2.3.1 Source Term B2-6
2.3.2 Total Activity B2-6
2.3.3 Waste Category B2-7
2.3.4 Dimensions B2-7
2.3.5 Total Volume B2-8
2.3.6 Gross Weight B2-8
2.4 CONTENTS DATA AND RESTRICTIONS FOR METAL BOX CONTAINING FOUR LOWER VAULT COLUMNS B2-9
2.4.1 Source Term B2-9
2.4.2 Total Activity B2-9
2.4.3 Waste Category B2-10
2.4.4 Dimensions B2-11
2.4.5 Total Volume B2-11
2.4.6 Gross Weight B2-12
2.5 CONCLUSIONS B2-12

3.0 CONTAINMENT EVALUATION B3-1
3.1 INTRODUCTION B3-1
3.2 CONTAINMENT SOURCE SPECIFICATION B3-1
3.3 NORMAL TRANSFER CONDITIONS B3-1
3.4 CONTAINMENT EVALUATION CONCLUSIONS B3-2

4.0 SHIELDING EVALUATION B4-1
4.1 INTRODUCTION B4-1
4.2 DIRECT RADIATION SOURCE SPECIFICATION B4-1
4.3 SUMMARY OF SHIELDING PROPERTIES OF MATERIAL B4-1
4.4 NORMAL TRANSFER CONDITIONS B4-1
4.5 SHIELDING EVALUATION AND CONCLUSIONS B4-2
APPENDIX B-1: 309 BUILDING TANK FARM BA-1

CONTENTS (cont)

5.0 STRUCTURAL EVALUATION B5-1
5.1 INTRODUCTION B5-1
5.2 STRUCTURAL EVALUATION OF PACKAGE B5-1
5.2.1 Structural Design and Features Offered by the Metal Boxes B5-1
5.2.2 Chemical and Galvanic Reactions B5-2
5.2.3 Tamper-Indicating Feature B5-2
5.2.4 Lifting and Tiedown Devices B5-2
5.2.5 Positive Closure B5-2
5.2.6 Weights and Center of Gravity B5-2
5.2.7 Tamper-Indicating Feature B5-2
5.2.8 Lifting and Tiedown Devices B5-2
5.3 NORMAL TRANSFER CONDITIONS B5-2
5.4 STRUCTURAL EVALUATION AND CONCLUSIONS B5-3
APPENDIX B-2: SHIRAGA ENGINEERING SAFETY EVALUATION BB-1

6.0 THERMAL EVALUATION B6-1
6.1 INTRODUCTION B6-1
6.2 SUMMARY OF THERMAL PROPERTIES OF MATERIALS B6-1
6.3 SUMMARY OF THERMAL PROPERTIES OF MATERIALS B6-1
6.4 THERMAL EVALUATION FOR NORMAL TRANSFER CONDITIONS B6-2
6.5 THERMAL EVALUATION AND CONCLUSIONS B6-2

7.0 PRESSURE AND GAS EVALUATION B7-1
7.1 GAS GENERATION B7-1
7.2 PACKAGE PRESSURE AND FLAMMABLE GAS CONCLUSIONS B7-1
APPENDIX B-3: ION EXCHANGE COLUMN H_2 GENERATION ENGINEERING SAFETY EVALUATION BC-1

8.0 PACKAGE TIEDOWN SYSTEM EVALUATION B8-1
8.1 SYSTEM DESIGN B8-1
8.2 ATTACHMENTS AND RATINGS B8-1

9.0 REFERENCES B9-1

LIST OF TABLES

PART A

A-1. Smearable Contamination Limits A6-1

PART B

B-1 Contents of Ion Exchange Columns B2-2
B-2 Activity Limits for Type A Packages B2-4
B-3 Determination of Category 1 Waste B2-4
B-4 Dimensions of Upper Vault Columns B2-5
B-5 Volume Calculations for Upper Vault Column Packaging B2-5
B-6 Gross Weight Calculations B2-6
B-7 Activity Limits for Type A Packages B2-7
B-8 Category 3 Determination B2-7
B-9 Dimensions of Three Lower Vault Columns B2-8
B-10 Three Lower Vault Column Volume Calculations B2-8
B-11 Gross Weight Calculations B2-9
B-12 Type A Packaging Activity Limits B2-10
B-13 Calculations for Category 3 Determination. B2-11
B-14 Dimensions of Four Lower Vault Columns B2-11
B-15 Volume of Lower Vault Columns B2-12
B-16 Gross Weight of Metal Box with Four Columns B2-12
B-17 Input Values Used in Spreadsheet B7-1
B-18 H_2 Generation Results B7-2

This page intentionally left blank.

THIS PAGE INTENTIONALLY
LEFT BLANK

SAFETY EVALUATION FOR PACKAGING FOR ONSITE TRANSFER OF PLUTONIUM RECYCLE TEST REACTOR ION EXCHANGE COLUMNS

PART A: DESCRIPTION AND OPERATIONS

1.0 INTRODUCTION

1.1 GENERAL INFORMATION

The purpose of this Safety Evaluation for Packaging (SEP) is to authorize the use of 3 U.S. Department of Transportation (DOT) 7A Type A metal boxes (Capital Industries Part No. S 0600-0600-1080-0104) to package 12 Plutonium Recycle Test Reactor (PRTR) ion exchange columns as low-level waste (LLW). The packages will be transferred from the 309 Building in the 300 Area to low level waste burial in the 200 West Area.

One metal box contains five upper vault columns (see the Part A Appendix for drawing). The total activity in this box meets the activity limits for Type A packages found in 49 CFR 173.431(a), "Activity Limits for Type A and Type B Packages." However, the weight of the packaged columns exceeds the maximum gross weight limitation of 7,000 lb specified by the manufacturer (see Part B, Section 5.0 for structural evaluation). This package is also considered Category 1 LLW waste per WHC-EP-0063, *Hanford Site Solid Waste Acceptance Criteria*, Section 3, and Appendix K.

Two boxes contain ion exchange columns from the lower storage vault (see Part A Appendix for drawing). These packages meet the activity limits for Type A packages found in 49 CFR 173.431(a). These packages also exceed the maximum gross weight limitation of 7,000 lb because they are considered Category 3 LLW as defined in WHC-EP-0063, Section 3, and Appendix K, thus requiring stabilization using grout as the stabilization media (see Part B, Section 5.0 for structural evaluation). Because of deflection of the boxes near the flange of the lid and excess grout, each box containing grout will be shipped without a lid. The exposed grout in these boxes will be covered with plastic to keep the grout from being exposed to adverse weather conditions.

The following analyses are used to demonstrate the safety of the metal boxes under the conditions already described:

- Containment evaluation
- Shielding evaluation
- Structural analysis
- Thermal generation
- H_2 gas generation
- Tiedown system analysis.

Based on the overweight characteristics of the packaged columns and because the lids will be left off of the Category 3 LLW boxes, the section of road on which the shipment will be transported that normally is open to public access shall be closed to exclude the public and nonessential workers from access to the

shipment.

Road closure ensures that this shipment is not considered "in commerce" where DOT regulations govern transportation.

1.2 SYSTEM DESCRIPTION

The packaging used to contain the 12 ion exchange columns is 5-ft x 5-ft x 9-ft 7A, Type A metal boxes. These metal boxes were manufactured by Capital Industries, Inc. (Part No. S 0600-0600-1080-0104).

These metal boxes (Part No. S 0600-0600-1080-0104) were designed and qualified by analysis to meet 49 CFR 178.350, "Specification 7A, General Packaging, Type A," in accordance with Capital Industries Inc., Part No. S 0483-0510-0823-0104 and Part No. V 0483-0510-0283-0104 vented container. (See Capital Industries, *Container Certification Analysis for Part No. S-0600-0600-1080-0104*).

2.0 PACKAGING SYSTEMS

2.1 CONFIGURATIONS AND DIMENSIONS

The Capital Industries Inc., 7A, Type A, metal box (Part No. S 0600-0600-1080-0104) is designed and certified by analysis to meet the requirements for DOT 7A, Type A packages outlined in 49 CFR 178.350. This metal box is essentially designed to maintain a payload limited to a maximum of 1-A_1 (special form) or 1-A_2 (normal form) quantity of radioactive material per 49 CFR 173.433 and 49 CFR 173.435 under normal conditions of transport. Normal conditions of transport are identified in 10 CFR 71.71.

Specifications for the metal box used to package the ion exchange columns are as follows.

Overall dimensions	66 in. wide, 63-1/4 in. deep, 114-3/4 in. long
Interior dimensions	60 in. wide, 60 in. deep, 108 in. long
Number of corrugations	24.

2.2 MATERIALS OF CONSTRUCTION

Material	10-gauge bottom, 12-gauge lid and sides A570 hot rolled sheet steel and A36 structural members and 3/16-in.-thick plate
Lid reinforcing	Angle 3 in. x 7/16 in. x 3/16 in., around lid perimeter
Lid seal	2-in. wide, 1/4-in. thick, commercial 30 durometer neoprene
Lid fasteners, bolts, and nuts	1/2 in. - 13 x 1-1/2-in. stainless steel.

2.3 DESIGN AND FABRICATION METHODS

The boxes used to package the ion exchange columns are welded metal boxes designed in accordance with Capital Industries, Inc. specification S 0600-0600-1080-0104.

2.4 WEIGHTS AND CENTER OF GRAVITY

The weight of the packaged columns is assumed to be at the geometric center of the box.

Total Weight	1,620 lb
Weight, box	1,245 lb
Weight, lid and stiffeners	375 lb
Certified weight	7,000 lb
Maximum gross weight	24,900 lb.

2.5 CONTAINMENT BOUNDARY

The containment boundary for the Category 1 LLW box is considered to be the top, bottom, and sides of the box, the neoprene gasket, and the lid. The containment boundary for the two Category 3 LLW boxes is considered to be the bottom and sides of the box and the top layer of grout because each box will be shipped without a lid.

2.6 VOLUME (CAVITY SIZE)

225.0 ft^3 (60 in. x 60 in. x 108 in.).

2.7 HEAT DISSIPATION

The payload produces a low enough level of heat (less than 1 watt per box) that passive cooling meets the heat dissipation requirements.

2.8 SHIELDING

The metal box affords only a minimum amount of shielding provided by the metal walls of the box (see Part B, Section 4.0).

2.9 LIFTING DEVICES

Lifting equipment used shall conform to the requirements of the U.S. Department of Energy, Richland Operations Office (RL), *Hanford Site Hoisting and Rigging Manual*.

2.10 TIEDOWN DEVICES

The nylon straps and fasteners used to tie the boxes to the trailer shall be in compliance with 49 CFR 393.102, "Tiedown Assemblies."

2.11 OPERATIONAL FEATURES

No sophisticated operations are required to close the box containing Category 1 LLW. Box closure operations for the box containing Category 1 LLW requires inserting the payload in the box then securing the gasket and lid.

Box closure operations for the two boxes containing the Category 3 LLW includes inserting the payload in the box then covering the top of the box with plastic.

3.0 PACKAGE CONTENTS

3.1 GENERAL DESCRIPTION

The 12 ion exchange columns are packaged in three 7A, Type A metal boxes. In the configuration in which they are to be packaged (see Appendix A, drawings 10-1, 10-2, and 10-3), each box is considered to contain a Type A quantity of radioactive material as defined in 49 CFR 173.433 and 49 CFR 173.435. The payload is also considered to be fissile exempt (less than 15 grams of fissile material per box, per Part B, Section 2.0).

The packaging is configured in accordance with the description provided in Part B, Section 2.0, and Part A, Appendix, Attachment 1.

3.2 CONTENTS RESTRICTIONS

The following is a characterization summary of the ion exchange columns based on non-destructive analysis, data established before the non-destructive analysis, and Part B, Section 2.0:

- One box will contain five ion exchange columns from the upper vault. The box will contain miscellaneous waste. Pyro[1] foam will be used to fill void space inside the box. The box will contain 0.0937 Ci ^{60}Co, 0.0101 Ci ^{137}Cs, and 0.001648 Ci $^{90}Sr/^{90}Y$. The box will weigh no more than 8,320 lb.

- A second box will contain three ion exchange columns from the lower vault. The box will contain 0.32730 Ci ^{60}Co, 0.06837 Ci ^{137}Cs, and 0.01094 Ci $^{90}Sr/^{90}Y$. Grout will be used to fill the void space inside the box. The box will weigh no more than 24,900 lb.

- A third box will contain four ion exchange columns from the lower vault. The box will contain 0.13322 Ci ^{60}Co, 0.45689 Ci ^{137}Cs, 2.0 pCi Pu^{239}, and 0.07310 Ci $^{90}Sr/^{90}Y$. Grout will be used to fill the void space inside the box. The box will weigh no more than 21,700 lb.

The payloads are considered LLW. The boxes do not contain nonradioactive hazardous material. See Part B, Section 2.0 for a detailed contents analysis of the payloads. See Part B, Section 2.0 of this SEP for a detailed analysis of the payload contents.

---

[1]Pyro foam is a registered trademark of Pyro Foam, Inc.

4.0 TRANSPORT SYSTEM

4.1 TRANSPORT VEHICLE

The transport vehicle is a 50-ft long by 10-ft wide trailer. The trailer conforms to DOT annual inspection requirements found in 49 CFR 396.3, "Inspection, Repair, and Maintenance," and 49 CFR 396.17, "Periodic Inspection."

4.2 TIEDOWN SYSTEM

The nylon straps and fasteners used to tie down the boxes to the trailer are in compliance with 49 CFR 393.102, "Tiedown Assemblies." The straps are rated at 12,000 lb. Bracing will include I beams chained to the trailer, with one I beam on each of the four linear sides of the boxes.

4.3 SPECIAL TRANSFER REQUIREMENTS

The following arrangements have been made to meet special transfer requirements.

- The boxes exceed the manufacturer's maximum gross weight limit of 7,000 lb. In addition, the boxes containing Category 3 LLW will not have lids attached to the boxes. Therefore, the section of the road on which the shipment will be transported that is normally open to the public shall be closed to the public and non-essential workers.
- The transport vehicle will be visually inspected before loading to ensure that it is acceptable for use.
- The boxes will be radiologically surveyed before loading.
- All rigging hardware, attachments, and associated equipment will be visually inspected to ensure that they are working properly.
- The tiedown straps, tension devices, and associated attachments will be visually inspected to ensure that they are working properly.
- The Category 1 LLW box will be visually inspected to ensure that containment surfaces and the lid sealing interface have no visible breaches. The Category 3 LLW will be visually inspected to ensure that the exposed grout is covered with plastic, and that there are no visible breaches in the box or plastic covers.
- Transport vehicle speed will be limited to posted speed limits.
- The transport route will be the shortest available route using normal Hanford Site paved roadway.
- The boxes will not be transferred during periods of inclement weather (i.e., winds in excess of 35 mph, heavy driving rain, blowing dust that results in poor visibility).

- The transport vehicle will be equipped with a fire extinguisher capable of extinguishing a Class A, B, or C fire. The driver of the vehicle will be trained and qualified to use the fire extinguisher.

- In the event of an accident involving the transport vehicle, onsite emergency response guidelines will be followed.

- The requirements of WHC-CM-2-14, *Hazardous Material Packaging and Shipping* will be followed while transferring the boxes.

- Dose rate readings have shown that the maximum dose rate is 400 mRem/hr at the surface of the boxes. (See Part B, Section 4.5.) To meet as low as reasonably achievable (ALARA) principles, the boxes will be configured on the trailer to limit the dose rate on the surface of each package facing outside of the trailer. The surface dose rate readings on the cab of the tractor shall not exceed 2 mRem/hr.

- The transfer will be made during off-peak traffic hours over an uncongested route. The section of road used for the transfer will be closed to ensure that nonessential personnel and the public do not have access to the boxes.

- The metal boxes tied down to the trailer will be handled as a wide load and as an overweight load. Therefore, the load will be specially permitted for both wide load and overweight conditions.

5.0 ACCEPTANCE OF PACKAGING FOR USE

The acceptance of the metal boxes for packaging the ion exchange columns is based on the evaluations presented in Part B of this SEP. The metal boxes are accepted as 7A, Type A, metal boxes per 49 CFR 178.350, in accordance with Capital Industries, Inc. Specification No. S 0600-0600-1080-0104 and as indicated in Sections 1.2.1 and 2.1 of this SEP. The metal boxes are also accepted per QR 7.0 "Control of Purchased Items and Services" contained in WHC-CM-4-2, *Quality Assurance*.

6.0 OPERATING REQUIREMENTS

6.1 CONTENTS RESTRICTIONS

The contents of the three metal boxes shall not exceed the restrictions found in Section 3.2. Smearable contamination limits shall not exceed those in Table A-1.

Table A-1. Smearable Contamination Limits.

	Removable (dpm/100 cm^2)[2]	Total (Fixed + Removable) (dpm/100 cm^2)[3]
U-natural, ^{235}U, ^{238}U, and associated decay products.	220 alpha[4]	5,000 alpha
Transuranics, ^{226}Ra, ^{228}Ra, ^{230}Th, ^{228}Th, ^{231}Pa, ^{227}Ac, ^{125}I, ^{129}I	20	500
Th-nat, ^{232}Th, ^{90}Sr, ^{223}Ra, ^{224}Ra, ^{232}U, ^{126}I, ^{131}I, ^{133}I	200	1,000
Beta-gamma emitters (nuclides with decay modes other than alpha emission or spontaneous fission) except ^{90}Sr and others noted above. Includes mixed fission products containing ^{90}Sr.	1,000 beta/gamma	5,000 beta/gamma

[1]The values in this table apply to radioactive contamination deposited on, but not incorporated into, the contaminated item. Where contamination by both alpha-and beta/gamma-emitting nuclides exists, the limits established for the alpha-and beta/gamma-emitting nuclides apply independently.

[2]The amount of removable radioactive material per 100 cm^2 of surface area should be determined by swiping the area with dry filter or soft absorbent paper, while applying moderate pressure, and then assessing the amount of radioactive material on the swipe with an appropriate instrument of known efficiency. For objects with a surface area less of than 100 cm^2, the entire surface should be swiped, and the activity per unit area should be based on the actual surface area. Except for transuranic elements, ^{228}Ra, ^{227}Ac, ^{228}Th, ^{230}Th, ^{231}Pa, and alpha-emitters, using swiping techniques to measure removable contamination levels is not necessary if direct scan surveys indicate that the total residual contamination levels are below the values for removable contamination.

[3]The levels may be averaged over 1 m^2 provided the maximum activity in any area of 100 cm^2 is less than three times the values in this table.

[4]More restrictive level required by 49 CFR 173.443. All other limits are in accordance with the Hanford Site Radiological Control Manual (RL 1994).

6.2 PACKAGE CLOSURE INSTRUCTION

The procedure for closing the package is as follows:

1. Load the packages in accordance with Appendix A, Drawings 10-1, 10-2, and 10-3.

2. The boxes shall be properly shored during the Pyro foam and grout filling process (see Part B, Section 5.4).

3. Ensure full reaction of the Pyro foam, and a minimum of 7 days curing of the grout, both before lifting and transporting the boxes (see Part B, Section 5.4).

4. Follow the manufacturer's closure instructions (as applicable) when sealing the Category 1 LLW box. Ensure that the exposed grout in the Category 3 LLW boxes is covered with plastic.

5. A tamper-indicating device is not needed because the payload is either

enveloped in Pyro foam (Category I LLW) or enveloped in grout (Category III LLW).

6.3 TRANSFER

The boxes will be transferred in accordance with Part A, Section 4.3.

7.0 QUALITY ASSURANCE

7.1 GENERAL REQUIREMENTS

The responsibilities of quality assurance personnel are as follows:

- Verify that the metal boxes used for packaging the columns meet the quality of design and construction requirements specified in 49 CFR 173.474(a).
- Verify that the metal boxes used for packaging the columns are in unimpaired physical condition, except for superficial marks in accordance with 49 CFR 173.475(b).
- Verify that the Category 1 LLW box packaging closure device, including any required gasket, is properly installed, secured, and free of defects in accordance with 49 CFR 173.475(e). Verify that the Category 3 LLW boxes have exposed grout covered with plastic in accordance with the requirements of this SEP.
- Verify that all special packaging instructions (as applicable) for filling, closing, and preparing the packaging for shipment have been followed in accordance with 49 CFR 173.475(e), and in accordance with the requirements of this SEP.
- Verify that the packaging's closure, or other openings through which radioactive material might escape are properly closed before shipment in accordance with 49 CFR 173.475(f), and in accordance with the requirements of this SEP.
- Ensure that documentation is retained in accordance with WHC-CM-2-14, *Hazardous Material Packaging and Shipping*, Part VII.
- Verify that the metal boxes also meet the requirements of QR 7.0 "Control of Purchased Items and Services," WHC-CM-4-2, *Quality Assurance*.

7.2 SEP CONTROL SYSTEM

This SEP will be used to support the one-time shipment of the PRTR ion exchange columns from the 309 Building ion exchange column vault to low-level waste burial in the 200 West Area. This SEP will expire immediately following the shipment, or one year from the document release date, whichever is first. Use only the current and approved version of this SEP.

This SEP will be reviewed using an Engineering Data Transmittal. All comments and changes as a result of the review will be incorporated into the SEP.

8.0 MAINTENANCE

This SEP authorizes the one-time transfer of three 7A, Type A metal boxes containing PRTR Ion Exchange Columns from the 309 Building Ion Exchange Column Vault to low-level waste burial in the 200 West Area. There are no specific maintenance requirements.

9.0 REFERENCES

10 CFR 71, "Energy," *Code of Federal Regulations*, as amended.

49 CFR 173, "Transportation," *Code of Federal Regulations*, Subpart I, and 178.350.

49 CFR 393.102, "Tiedown Assemblies," *Code of Federal Regulations*, as amended.

Capital Industries, Inc., *Container Certification Analysis for Part Number S 0600 0600 1080 0104*, Capital Industries, Inc., Seattle, Washington.

WHC-CM-1-6, *Westinghouse Radiological Control Manual*, Chapter 2 (Table 2-2) and Chapter 4, Article 423.

WHC-CM-4-2, *Quality Assurance*, Westinghouse Hanford Company, Richland, Washington.

WHC-CM-2-14, *Hazardous Material Packaging and Shipping*, Westinghouse Hanford Company, Richland, Washington.

PART A APPENDIX

DRAWINGS

Attachment 1 - BHI Memo Job No. 22192
AA-2 Drawing of box containing 5 upper vault columns
AA-3 Drawing of box containing 3 lower vault columns
AA-4 Drawing of box containing 4 lower vault columns

Bechtel Hanford, Inc.

450 Hills Street, Richland, WA 99352
Mailing address: P.O. Box 969, Richland, WA 99352
Telephone: (509) 375-4640 Fax: (509) 375-4644

015453

Job No. 22192
Written Response Required? NO
Closes CCN: N/A
OU: N/A
TSD: N/A
ERA: N/A
Subject Code: 8300

JUN 1 8 1995

Westinghouse Hanford Company
M. E. Burnside, Safety Evaluation Plan Lead
Hazardous Waste Operations
P. O. Box 1970, G2-02
Richland, Washington 99352

Dear Mr. Burnside:

Subject: **309 BUILDING PLUTONIUM RECYCLE TEST REACTOR ION EXCHANGER VAULT CLEANOUT PROJECT WASTE SHIPMENT**

The subject vault cleanout project column containerization data is submitted formally for a reference in finalizing the transportation safety evaluation for packaging (SEP) for the three burial boxes containing the twelve ion exchangers (attachment 1 and 2). The Environmental Restoration Contractor (ERC) project schedule for the 309 vault cleanout requires the SEP by no later than June 19 in order to meet final packaging (i.e., Storage/Disposal Approval Record preparation, category III box grouting, etc.) and shipment milestones commitments.

If you have any questions or require additional information, please call Mr. Paul Griffin on 373-3916 or me on 373-1382.

Sincerely,

M. A. Mihalic
Task Lead, D&D Projects

PWG:cmj

Attachments:
1. 309 Building Ion Exchanger Removal and Vault Cleanout Containerization Data
2. 309 Building Vault Column Packaging Configuration

cc: E. J. Bitten (WHC) L4-73, w/o
J. E. Ham (WHC) L4-73, w/o

Environmental Excellence
HANFORD

D&D Projects

015453

ATTACHMENT 1

015453

309 Building Ion Exchanger Removal and Vault Cleanout

PRTR IX Vault Column Disposal				
IX I.D./ (Dia.)	Date/ Time/ Order Removed	Dose Rate (mRem/ Hr)	Comments /Observations	Disposal Box #
IX-3F (18")	5-2-95 3:15 1	1,500	Upper Vault: NDA (22 count sections): Co-60 & Cs-137: BF_3 background	#309-95-002
IX-2 (18")	5-3-95 2:36 5	80	Upper Vault: NDA (11 count sections): Co-60 & Cs-137: BF_3 background	#309-95-002
IX-1 (30")	5-3-95 10:26 2	100	Upper Vault: NDA (11 count sections): Co-60 & Cs-137: BF_3 background	#309-95-002
IX-3 (18")	5-3-95 1:38 4	180	Upper Vault: NDA (11 count sections): Co-60 & Cs-137: BF_3 background	#309-95-002
BIX-5 (34")	5-3-95 12:10 3	35	Upper Vault: NDA (11 count sections): Co-60 & Cs-137: BF_3 background	#309-95-002
Lower S1 (18")	5-11-95 4:15 6	2,500	Lower Vault (South Port): NDA (11 plus 5 count sections): Co-60 & Cs-137: BF_3 background: (approx 1 cup water: 90,000 dpm)	#309-95-003
Lower S2 (18")	5-12-95 9:00 7	300	Lower Vault (South Port): NDA (11 count sections): Co-60 & Cs-137: BF_3 background	#309-95-003
Lower S3 (30")	5-12-95 1:30 8	30	Lower Vault (South Port): NDA (11 count sections): Co-60 & Cs-137: BF_3 background	#309-95-003
Lower S4 (30")	5-15-95 10:30 9	200	Lower Vault (South Port): NDA (11 count sections): Co-60 & Cs-137: BF_3 background: (swiped 5/12/95 8-9K dpm H_3): (uprighted for drain over Sat/Sun; approx third of a cup of water in discharge pipe elbow 5-15-95)	#309-95-004
Lower S5 (18")	5-15-95 2:15 10	1,300	Lower Vault (North Port): NDA (11 count sections): Co-60 & Cs-137: BF_3 background	#309-95-004

015453

IX I.D./ (Dia.)	Date/ Time/ Order Removed	Dose Rate (mRem/ Hr)	Comments /Observations	Disposal Box #
Lower S6 (30")	5-16-95 11:40 11	150	Lower Vault (North Port): NDA (11 count sections): Co-60 & Cs-137: BF_3 background	#309-95-004
Lower S7 (30")	5-16-95 2:00 12	120	Lower Vault (North Port): NDA (11 count sections): Co-60 & Cs-137: *BF_3 above-background	#309-95-004

* Column S7: BF_3 above-background just discernable of some transuranic radionuclides (less than minimum quantitative level).

015453

ATTACHMENT 2

309 VAULT COLUMN PACKAGING CONFIGURATION

015453

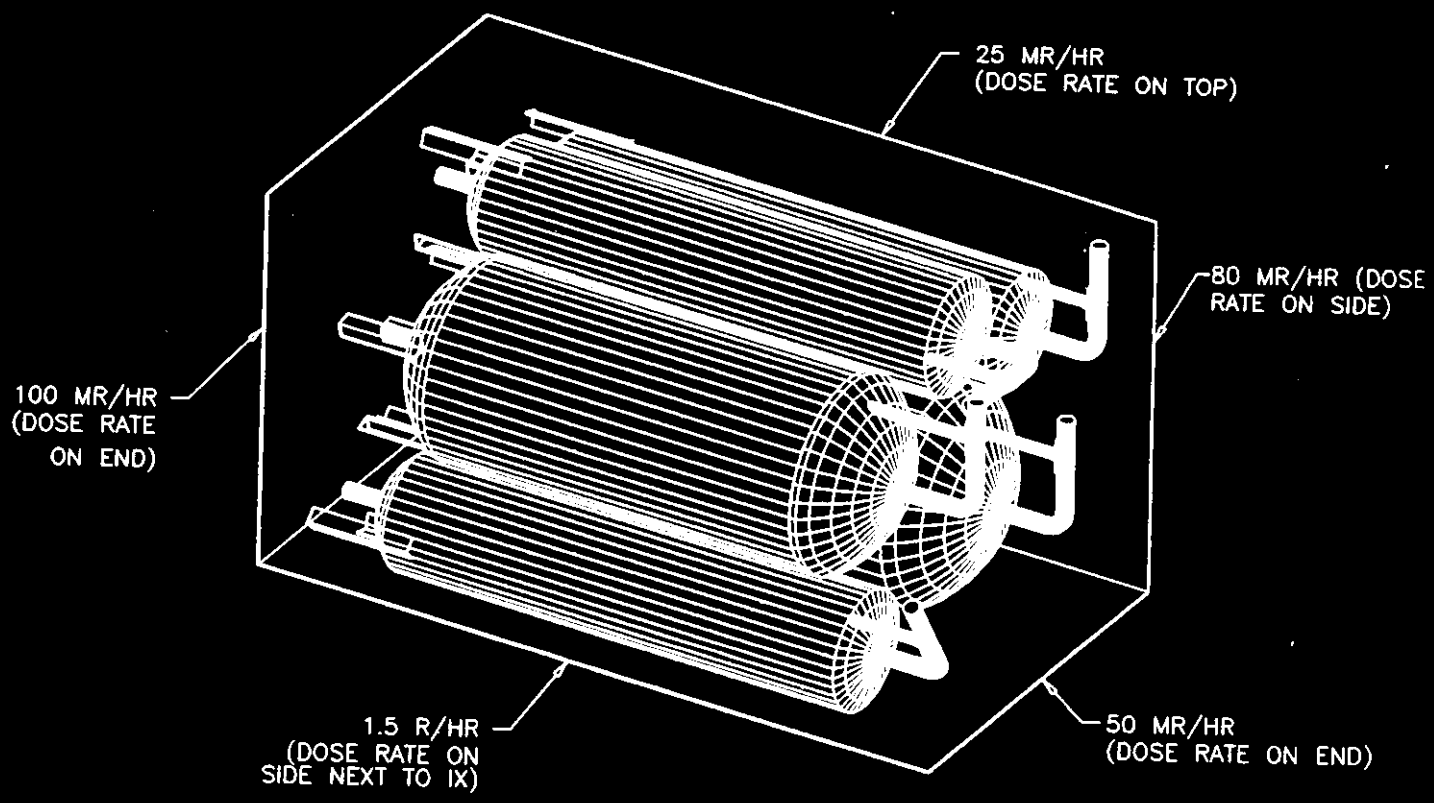

BOX #309-95-002
LOWER VAULT COLUMNS
(LLW CAT I)

CONTAINER:
DOT 7A, TYPE A
5' X 5' X 9'
CAPITAL INDUSTRIES INC., PO W349279
8,230 lbs APPROX. TOTAL WT. (BOX, IX, PYRO FOAM)

015453

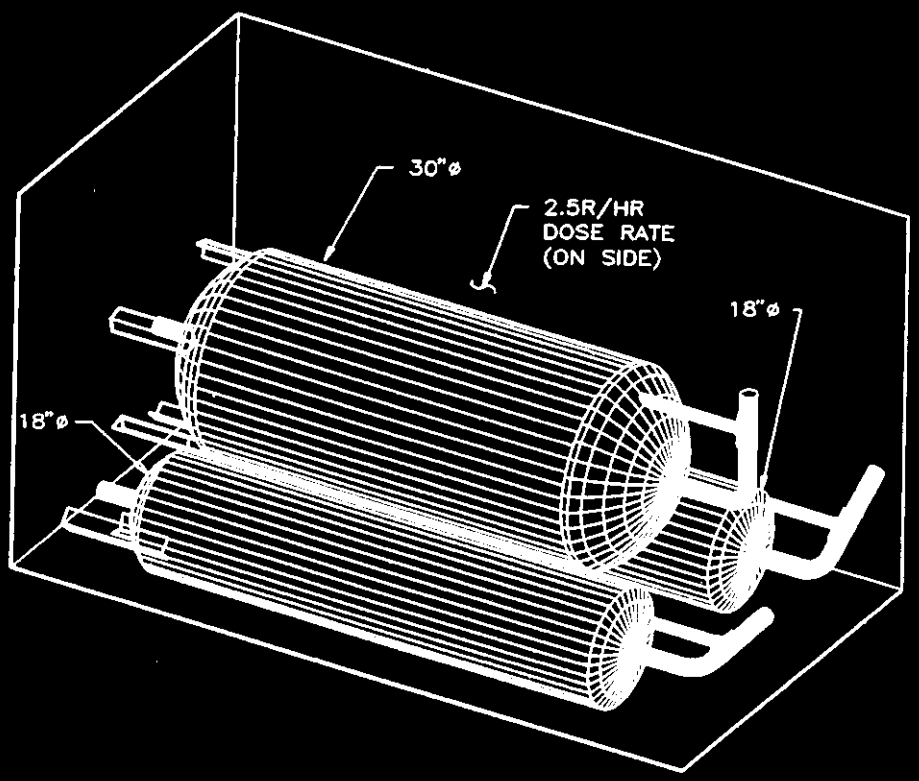

BOX #309-95-003
LOWER VAULT COLUMNS
(LLW CAT III)

CONTAINER:
DOT 7A, TYPE A
5' X 5' X 9'
CAPITAL INDUSTRIES INC., PO W349279
24,900 lbs APPROX. TOTAL WT. (BOX, IX, GROUT)

015453

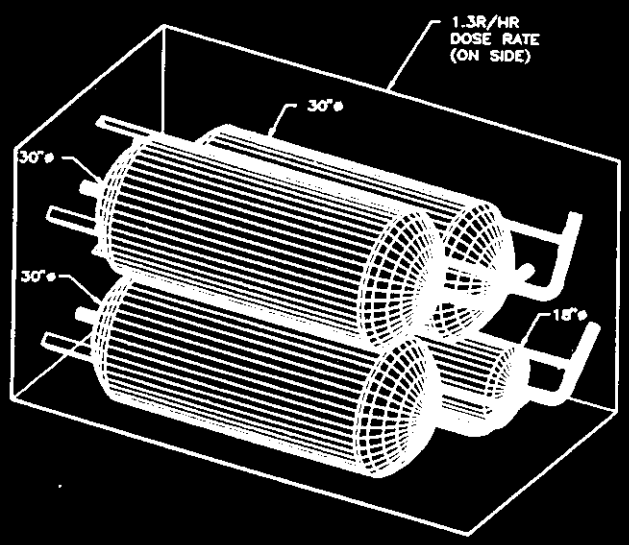

BOX #309-95-004
LOWER VAULT COLUMNS
(LLW CAT III)

CONTAINER:
DOT 7A, TYPE A
5' X 5' X 9'
CAPITAL INDUSTRIES INC., PO W349279
21,700 lbs APPROX. TOTAL WT. (BOX, IX, GROUT)

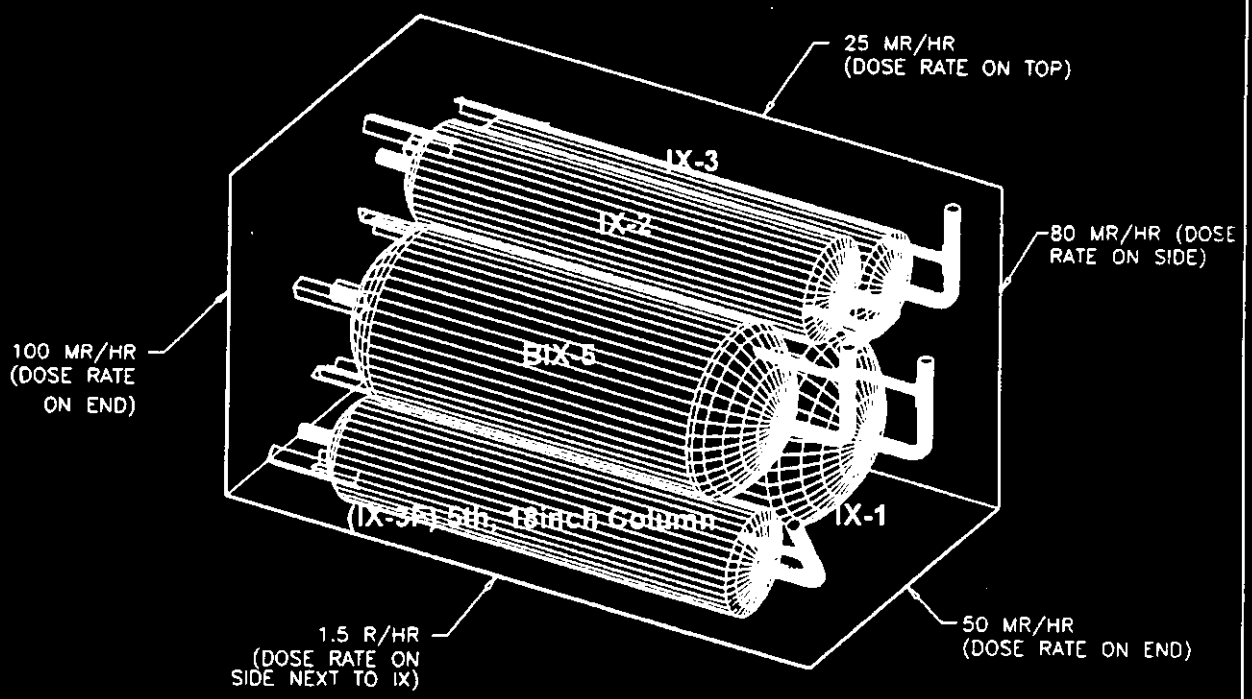

BOX #309-95-0002
LOWER VAULT COLUMNS
(LLW CAT 1)

Note: Doses rates shown are without
Pyro foam void space filler.

CONTAINER:
DOT 7A, TYPE A
5' X 5' X 9'
CAPITAL INDUSTRIES INC., PO W349279
8,230 lbs APPROX TOTAL WT. (BOX, IX, PYRO FOAM)

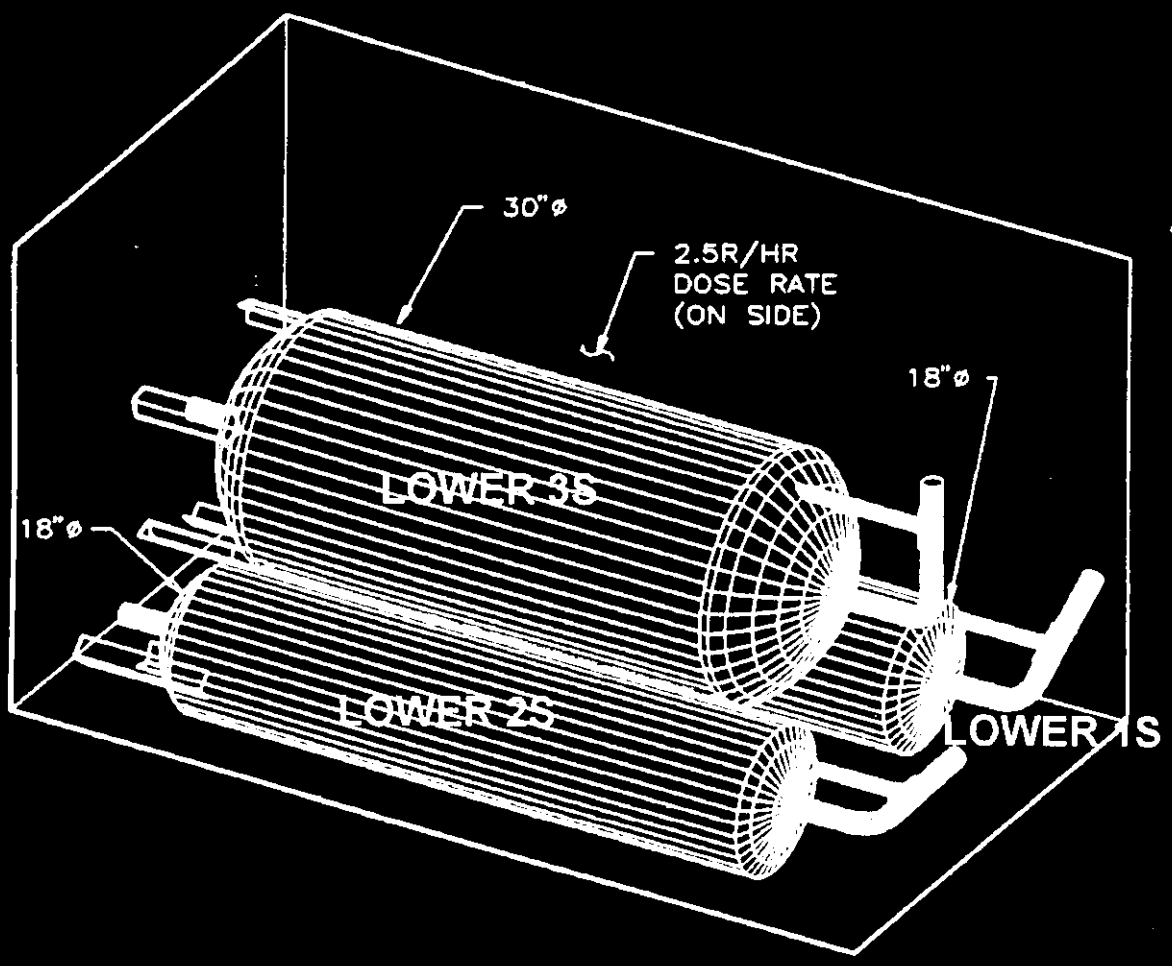

BOX #309-95-0003
LOWER VAULT COLUMNS
(LLW CAT III)

Note: Doses rates shown are without grout void space filler.

CONTAINER:
DOT 7A, TYPE A
5' X 5' X 9'
CAPITAL INDUSTRIES INC., PO W349279
24,900 lbs APPROX. TOTAL WT. (BOX, IX, GROUT)

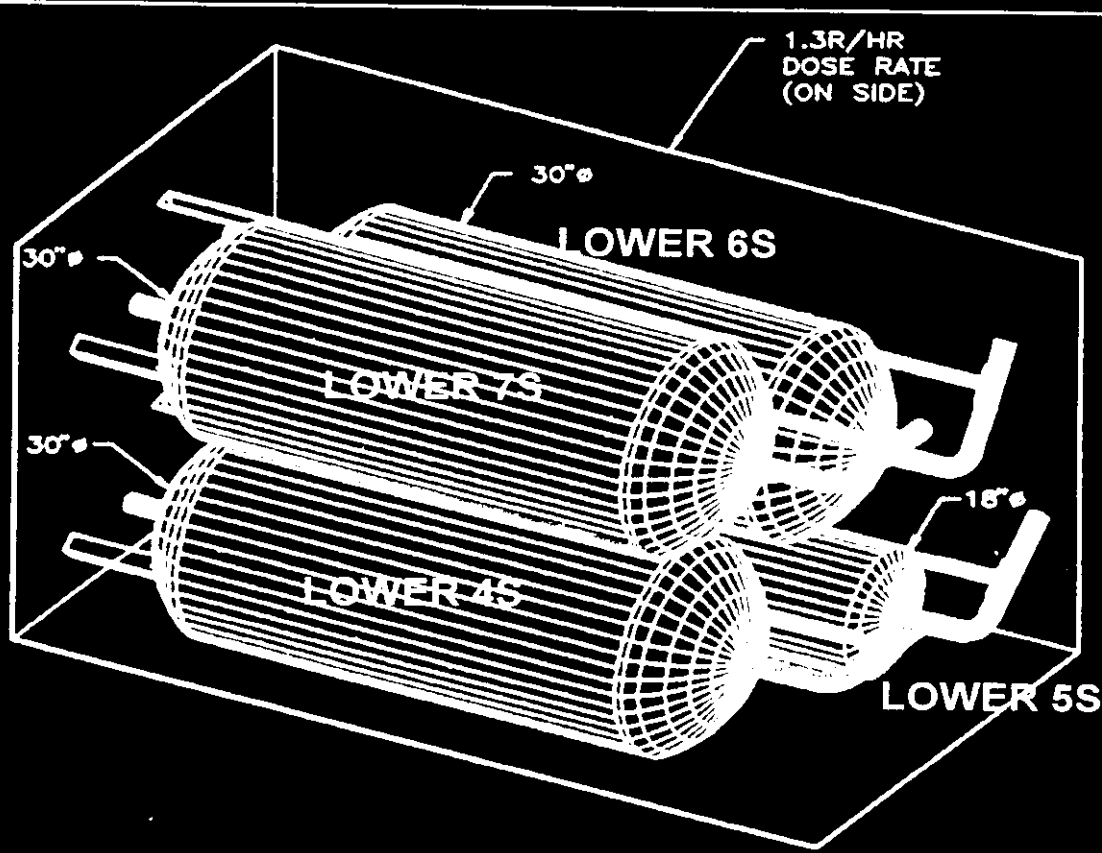

BOX #309-95-0004
LOWER VAULT COLUMNS
(LLW CAT III)

Note: Dose rates shown are without grout void space filler.

CONTAINER:
DOT 7A, TYPE A
5' X 5' X 9'
CAPITAL INDUSTRIES INC., PO W349279
21,700 lbs APPROX. TOTAL WT. (BOX, IX, GROUT)

PART B: PACKAGE EVALUATION

1.0 INTRODUCTION

1.1 SAFETY EVALUATION METHODOLOGY

This safety evaluation of the packaged ion exchange columns demonstrates that the payloads specified can be packaged and transported in a manner that is safe for workers, the public, and the environment, in accordance with established policies and procedures.

The primary conditions addressed in this SEP are as follows:

- The over-weight condition of the boxes as a result of filling void spaces with Pyro foam and grout.
- The lids will not be secured to the Category 3 LLW boxes during transport.
- The dose rates exceed DOT limits and Hanford Site Radiological Control limits.

The excessive weight condition and Category 3 LLW box lid removal are both evaluated in Part B, Sections 3.0 and 5.0 of this SEP. The dose rate conditions are addressed in Part B, Section 4.0 of this SEP.

1.2 EVALUATION SUMMARY AND CONCLUSION

Based on evaluations of the data provided in Part B, Section 2.0, the packaging and shipping methodology prescribed in Part A is acceptable for transferring the ion exchange columns.

The containment evaluation in Part B, Section 3.0 demonstrates that the package will maintain its contents as stated.

The shielding evaluation (Part B, Section 4.0) demonstrates that, with administrative controls used while loading the boxes onto the trailer, the boxes can be transferred in a manner consistent with ALARA practices.

The structural evaluation documented in Part B, Section 5.0 demonstrates that, with certain controls administered, the packaged ion exchange columns can be loaded, lifted, and transported safely.

Evaluations of hydrogen generation show that the packaged columns will not generate enough hydrogen to be a concern (see Part B, Section 7.0).

Heat generation also is not a concern raised by packaging the columns in the metal boxes, as indicated in Part B, Section 2.0. The thermal evaluation is provided in Part B, Section 6.0.

2.0 CONTENTS EVALUATION

2.1 CHARACTERIZATION

The contents characterization of the 12 ion exchange columns is based on non-destructive analysis of the ion exchange columns as each column was removed from the vault. Activity associated with the upper vault columns was established on May 18, 1995, and activity associated with the lower vault column data was established on May 24, 1995. Dose rates are determined based on survey readings obtained as the columns were removed from the vault. Non-radioactive hazardous materials are not present in the columns.

The Plutonium Recycle Test Reactor (PRTR) Ion Exchanger Vault (309 Building) contained 12 ion exchange columns left over from PRTR reactor operations. Five columns were located in the upper operation vault and seven were in the lower storage vault. The five columns from the upper vault are packaged in one Capital Industries, Inc. 5-ft x 5-ft x 9-ft 7A, Type A metal box (Part No. S 0600-0600-1080-0104). The 7 columns from the lower vault are packaged in 2 of the Capital Industries, Inc. 5-ft x 5-ft x 9-ft 7A, Type A metal boxes, Part No. S 0600-0600-1080-0104). Three lower vault columns are packaged in one box; four lower vault columns are packaged in the other box. The payload in each box is considered a Type A quantity of radioactive material as defined in 49 CFR 173.433, "Requirements for Determination of A_1 and A_2 Values for Radionuclides," and 49 CFR 173.435, "Table of A_1 and A_2 Values for Radionuclides." The payload in each box is also fissile exempt (less than 15 grams of fissile material per box as defined in 49 CFR 173.453, "Fissile Materials - Exceptions."

The contents and other data concerning the ion exchange columns are summarized in Table B-1.

Table B-1. Contents of Ion Exchange Columns.

Column ID#	Activity		$^{90}Sr/^{90}Y$ (0.16 of Cs)	Dose Rate (Highest Reading) (mRem/hr)	Bounding Case Total Volume (ft^3)	Resin Volume (ft^3)	Resin Mixture Density (lb/ft^3)	Void Space (ft^3)	% Void Space	Estimated resin wt (lbs)	Estimated total column wt (lb)
	^{137}Cs	^{60}Co									
BIX-5	1.7E-5	5.8E-4	2.7E-6	35	43.32-7.46 o.m. = 35.86	25.89	46.12	9.97	23	1,194	2,000
IX-1	1.3E-4	1.9E-3	2.0E-5	100	31.40	22.1	46.12	9.30	30	1,020	1,720
IX-2	4.2E-5	1.6E-3	6.8E-6	80	10.47	7.9	46.12	2.57	25	365	625
IX-3F	1.0E-2	8.8E-2	1.6E-3	1,500	10.47	7.9	46.12	2.57	25	365	625
IX-3	1.1E-4	1.2E-3	1.7E-5	180	10.47	7.9	46.12	2.57	25	365	625
Lower 1S	1.2E-2	2.5E-1	1.9E-3	2,500	10.47	7.9	46.12	2.57	25	365	625
Lower 2S	2.0E-3	7.9E-2	3.2E-4	300	10.47	7.9	46.12	2.57	25	365	625
Lower 3S	5.5E-2	9.3E-4	8.7E-3	30	31.40	22.1	46.12	9.30	30	1,020	1,720
Lower 4S	3.0E-1	3.0E-21	4.8E-2	200	31.40	22.1	46.12	9.30	30	1,020	1,720
Lower 5S	4.6E-3	1.0E-1	7.3E-4	1,300	10.47	7.9	46.12	2.57	25	365	625
Lower 6S	1.0E-1	1.0E-3	1.6E-2	150	31.40	22.1	46.12	9.30	30	1,020	1,720
*Lower 7S	5.2E-2	1.1E-4	8.3E-3	120	31.40	22.1	46.12	9.30	30	1,020	1,720

*Pu Estimated at ≤2 pCi

2.2 CONTENTS DATA AND RESTRICTIONS FOR BOX CONTAINING FIVE UPPER VAULT ION EXCHANGE COLUMNS

2.2.1 Source Term

The following activity is considered the source term[2] for the metal box containing the five upper vault columns (BIX-5, IX-1, IX-2, IX-3F, IX-3):

- ^{60}Co 0.0937 Ci
- ^{137}Cs 0.0103 Ci
- $^{90}Sr/^{90}Y$ 0.00165 Ci.

The $^{90}Sr/^{90}Y$ contribution is based on the results from the resin sample analysis obtained from Sample Analysis 5804 conducted at the 222-S Laboratory. The analysis indicated the following activity in the resin sample:

- ^{90}Sr 0.00102 μCi/g
- ^{137}Cs 0.00638 μCi/g.

The ratio of ^{90}Sr to ^{137}Cs is determined as follows:

$$(0.00102\ \mu Ci/g)/(0.00638\ \mu Ci/g) = 0.16 \text{ ratio of } ^{90}Sr \text{ to } ^{137}Cs$$

$$(0.0103\ Ci) \times 0.16 = 0.00165\ Ci\ ^{90}Sr/^{90}Y \text{ contribution.}$$

2.2.2 Total Activity

The total activity in the five upper vault columns is considered to meet the activity limits for Type A packages identified in 49 CFR 173.431(a), "Activity Limits for Type A and Type B Packages." This determination is based on calculations for the case of a mixture of different radionuclides, where the identity and activity of each radionuclide is known, in accordance with 49 CFR 173.433(b)(3), "Requirements for Determination of A_1 and A_2 Values for Radionuclides." The activity limit for Type A packages is met as indicated in Table B-2.

---

[2]Non-destructive analysis is recognized to be accurate to two significant figures. However, the source term reported in the analysis was carried out to four, and sometimes five, significant figures. The source term is reported here per analysis.

Table B-2. Activity Limits for Type A Packages.

Isotope	Activity	A2 Value	Ratio of Activity to A_2
^{60}Co	0.0937 Ci	7	0.0937/7 = 0.01339
^{137}Cs	0.0103 Ci	10	0.0103/10 = 0.00103
$^{90}Sr/^{90}Y$	0.00165 Ci	0.4	0.00165/0.4 = 0.00412
Sum of Fractions			0.01339 + 0.00103 + 0.00412 = 0.01854 which is <1, therefore Type A

2.2.3 Waste Category

The columns and associated waste are considered Category 1 LLW based on the activity in the metal box vs the activity limits found in WHC-EP-0063, *Hanford Site Solid Waste Acceptance Criteria*, Section 3, Table 3-1. The determination of Category 1 is calculated in Table B-3, given that (225 ft^3/box) x ($1m^3/35.3\ ft^3$) = 6.37 m^3/box.

Table B-3. Determination of Category 1 Waste.

Isotope	Activity per isotope	Activity limit (Category 1)	Calculation
^{60}Co	0.0937 Ci	77 Ci/m^3	0.0937 Ci/6.37 m^3 = 0.0147 Ci/m^3, 0.0147 /77 = 0.0001
^{137}Cs	0.0103 Ci	0.0063 Ci/m^3	0.0103 Ci/6.37 m^3 = 0.0016 Ci/m^3, 0.0016 /0.0063 = 0.2539
$^{90}Sr/^{90}Y$	0.00165 Ci	0.0043 Ci/m^3	0.00165 Ci/6.37 m^3 = 0.00026 Ci/m^3, 0.00026 /0.0043 = 0.060
Sum of Fractions per WHC-EP-0063, Appendix K, Section K.1.4.1			0.0001 + 0.2539 + 0.60 = 0.854 which is <1, therefore Category 1

2.2.4 Dimensions

The dimensions of the upper five vault columns are shown in Table B-4.

Table B-4. Dimensions of Upper Vault Columns.

Column Identification (all LLW)	Weight (lb)	Diameter (in.)	Length	Volume (bounding case)
BIX-5	2,000	34	7' 4"	43.32 ft^3
IX-1	1,720	30	6' 5"	30.68 ft^3
IX-2	625	18	6' 3"	11.04 ft^3
IX-3	625	18	6' 3"	11.04 ft^3
5th 18-in. column	625	18	6' 3"	11.04 ft^3

2.2.5 Total Volume

The total volume of the metal box and contents used for packaging the five upper vault columns is based on the volume of the empty metal box, the volume of the columns, the expected void space within the columns (nominally 27.3 percent of the void space in the columns), and the volume of the Pyro foam and miscellaneous waste used to fill the void space between the columns and the metal box. The Pyro foam and miscellaneous waste from column removal operations (i.e., legs cut from columns, gloves, plastic, etc.) has a weight density of approximately 10 lb/ft^3.

The total volume calculated for the box containing the five upper vault columns is shown in Table B-5.

Table B-5. Volume Calculations for Upper Vault Column Packaging.

Volume of	Calculation	Total (ft^3)
Empty metal box	-	225
Columns	43.32 ft^3 + 31.40 ft^3 + (10.47 ft^3 X 3)	106.13
Void space	(106.13 ft^3 - 7.46 o.m. of 34-in. column) X 27.3%	26.93
Pyro foam/miscellaneous waste	225 ft^3 - 106.13 ft^3 - 26.93 ft^3	91.94

2.2.6 Gross Weight

The gross weight of the five packaged columns is based on the tare weight of one metal box, the weight of the columns, and the weight of the Pyro foam and miscellaneous waste multiplied by the Pyro foam and miscellaneous waste volume, and a bounding case contingency factor for extra weight. The gross weight of the five packaged columns is calculated as shown in Table B-6.

Table B-6. Gross Weight Calculations.

Weight	Calculations	lb
Metal box (tare)	-	1,620 per Part No. S 0600-0600-1080-0104
Columns (total)	2,000 + 1,720 + (625 x 3)	5,595
Pyro foam and miscellaneous waste (total)	91.94 ft^3 x 10 lbs/ft^3	919
Contingency factor (bounding case)	-	96
Total (bounding case)		8,230

2.3 CONTENTS DATA AND RESTRICTIONS FOR METAL BOX CONTAINING THREE LOWER VAULT COLUMNS

2.3.1 Source Term

Two 18-in. diameter columns and one 30-in. diameter column (Lower 1S, Lower 2S, Lower 3S) from the lower vault are packaged in one 5-ft by 5-ft by 9-ft 7A, Type A metal box. The source term[3] for the box containing these columns is as follows:

- ^{60}Co 0.32730 Ci
- ^{137}Cs 0.06837 Ci
- $^{90}Sr/^{90}Y$ 0.01094 Ci.

The $^{90}Sr/^{90}Y$ contribution is based on the results from the resin sample analysis obtained from Sample Analysis 5804 conducted at the 222-S Laboratory. The analysis indicated the following activity:

- ^{90}Sr 0.00102 $\mu Ci/g$
- ^{137}Cs 0.00638 $\mu Ci/g$.

The ratio of ^{90}Sr to ^{137}Cs is determined using the following calculation:

$$(0.00102\ \mu Ci/g)/(0.00638\ \mu Ci/g) = 0.16 \text{ ratio of } ^{90}Sr \text{ to } ^{137}Cs$$
$$(0.06837\ ^{137}Cs) \times 0.16 = 0.01094\ Ci$$

2.3.2 Total Activity

The total activity within this box is considered to meet the activity limits for Type A packaging listed in 49 CFR 173.431(a), "Activity Limits for Type A and

[3]Non-destructive analysis is recognized to be accurate to two significant figures. However, the source term reported in the analysis was carried out to four, and sometimes five, significant figures. The source term is reported here per analysis.

Type B Packages." This determination is based on calculations for a case of a mixture of different radionuclides where the identity and activity of each radionuclide is known, as outlined in 49 CFR 173.433(b)(3). The activity limits for Type A packages are met as shown in Table B-7.

Table B-7. Activity Limits for Type A Packages.

Isotope	Activity (Ci)	A2 Value	Ratio of Activity to A2
^{60}Co	0.32730	7	0.32730/7 = 0.046757
^{137}Cs	0.06837	10	0.06837/10 = 0.006837
$^{90}Sr/^{90}Y$	0.01094	0.4	0.01094/0.4 = 0.02735
Sum of Fractions			0.046757 + 0.006837 + 0.02735 = 0.080944 which is <1, therefore Type A

2.3.3 Waste Category

The columns are considered Category 3 LLW based on the activity in the metal box vs the activity limits found in WHC-EP-0063, Section 3, Table 3-1. The determination of Category 3 is calculated in Table B-8, given that (225 ft^3/box) x (1m^3/35.3 ft^3) = 6.37 m^3/box.

Table B-8. Category 3 Determination.

Isotope	Activity per Isotope (Ci)	Activity limit (Category 1)	Activity limit (Category 3)	Calculation (Category 1)	Calculation (Category 3)
^{60}Co	0.32730	77 Ci/m^3	-	0.32730 Ci/ 6.37 m^3 = 0.051138 Ci/m^3, 0.051138/77 = 0.00066	-
^{137}Cs	0.06837	0.0063 Ci/m^3	13,000 Ci/m^3	0.06837 Ci/6.37 m^3 = 0.01073 Ci/m^3, 0.01073/ 0.0063 = 1.70	0.01073/ 13,000 = 0.0000008
$^{90}Sr/^{90}Y$	0.01094	0.0043 Ci/m^3	15,000 Ci/m^3	0.01094 Ci/6.37 m^3 = 0.001717 Ci/m^3, 0.001717/ 0.0043 = 0.39930	0.001717/15,000 = 0.0000001
Sum of Fractions				0.00066 + 1.70 + 0.39930 = 2.09996, which is >1, therefore not Category 1	0.0000008 + 0.0000001 = 0.0000009 which is <1, therefore Category 3

2.3.4 Dimensions

The dimensions of the three lower vault columns in this metal box are shown in Table B-9.

Table B-9. Dimensions of Three Lower Vault Columns.

Column Identification	Weight (lb)	Diameter (in.)	Length	Volume (ft^3) (bounding case)
Lower 1S	625	18	6'3"	10.47
Lower 2S	625	18	6'3"	10.47
Lower 3S	1,720	30	6'5"	31.40

2.3.5 Total Volume

The total volume of the metal box and contents used for packaging these three columns is based on the volume of the empty metal box, the volume of the columns, the expected void space within the columns (nominally 27.6 percent of the volume in the columns), and the volume of the grout used to fill the void space between the columns and the metal box. The weight density of the grout is 118 lb/ft^3. The grout is used to stabilize the columns within the metal boxes to meet the 300-year high-integrity container (HIC) requirement for Category 3 low-level waste (LLW), meeting the requirements of HS-V-P-0036, *High Integrity Container, 300 Year.*

The total volume calculated for the box containing the three lower vault columns is found in Table B-10.

Table B-10. Three Lower Vault Column Volume Calculations.

Volume of	Calculation	Total (ft^3)
Empty metal box	-	225
Columns	(10.47 ft^3 x 2) + 31.40 ft^3	52.34
Void Space	52.34 ft^3 x 27.6%	14.44
Grout	225 ft^3 - 52.34 ft^3 - 14.44 ft^3	158.22

2.3.6 Gross Weight

The gross weight of the three packaged columns in this box is based on the tare weight of one empty metal box, the weight of the columns, and the weight of the grout multiplied by the volume of grout needed to fill the void space between the columns and the interior walls of the metal box and a bounding-case contingency factor for extra weight. The calculations for determining the gross weight of the packaged columns are shown in Table B-11.

Table B-11. Gross Weight Calculations.

Weight of:	Calculations	lb
Box (tare)	-	1,620[1]
Columns	1,720 lbs + (625 lb x 2)	2,970
Grout	158.22 ft^3 x 118 lb/ft^3	18,670
Contingency factor (bounding case)	-	1,640
Total (bounding case)		24,900

[1]Defined for Part No. S 0600-0600-1080-0104.

2.4 CONTENTS DATA AND RESTRICTIONS FOR METAL BOX CONTAINING FOUR LOWER VAULT COLUMNS

2.4.1 Source Term

The following activity is considered the source term[4] for the metal box containing the four lower vault ion exchange columns (Lower 4S, Lower 5S, Lower 6S, Lower 7S) based on non-destructive analysis:

- ^{60}Co 0.13322 Ci
- ^{137}Cs 0.45689 Ci
- ^{239}Pu 2.0 pCi
- $^{90}Sr/^{90}Y$ 0.07310 Ci.

The $^{90}Sr/^{90}Y$ contribution is based on the results from the resin sample analysis obtained from Sample Analysis 5804 conducted at the 222-S Laboratory. The analysis indicated the following activity in the resin sample:

- ^{90}Sr 0.00102 $\mu Ci/g$
- ^{137}Cs 0.00638 $\mu Ci/g$.

The ratio of ^{90}Sr to ^{137}Cs is determined as follows:

$$(0.00102\ \mu Ci/g)/(0.00638\ \mu Ci/g) = 0.16 \text{ ratio of } ^{90}Sr \text{ to } ^{137}Cs$$
$$0.45689\ Ci\ ^{137}Cs \times 0.16 = 0.07310\ ^{90}Sr/^{90}Y \text{ contribution.}$$

[4]Non-destructive analysis is recognized to be accurate to two significant figures. However, the source term reported in the analysis was carried out to four, and sometimes five, significant figures. The source term is reported here per analysis.

2.4.2 Total Activity

The total activity within this box is considered to meet the activity limits for Type A packaging in accordance with 49 CFR 173.431(a), "Activity Limits for Type A and Type B Packages." This determination is based on calculations for a case with a mixture of different radionuclides where the identity and activity of each radionuclide is known, as described in 49 CFR 173.433(b)(3). The activity limits for Type A packages are met as shown in Table B-12.

Table B-12. Type A Packaging Activity Limits.

Isotope	Activity	A2 Value	Ratio of activity to A2
^{239}Pu	2.0 pCi	0.002	2.0 pCi/0.002 = 0.00000001
^{60}Co	0.13322 Ci	7	0.13322/7 = 0.019031
^{137}Cs	0.45689	10	0.45689/10 = 0.045689
$^{90}Sr/^{90}Y$	0.07310	0.4	0.07310/0.4 = 0.18275
Sum of Fractions			0.00000001 + 0.019031 + 0.045689 + 0.18275 = 0.24747 which is <1, therefore Type A

2.4.3 Waste Category

The columns are considered Category 3 LLW based on the activity in the columns vs the activity limits found in WHC-EP-0063, *Hanford Site Solid Waste Acceptance Criteria*, Section 3, Table 3-1. Given that (225 ft^3/box) x (1m^3/35.3 ft^3) = 6.37 m^3/box, the Category 3 determiniation is calculated as shown in Table B-13.

Table B-13. Calculations for Category 3 Determination.

Isotope	Activity per Isotope	Activity limit (Category 1)	Activity limit (Category 3)	Calculation (Category 1)	Calculation (Category 3)
^{239}Pu	2.0 pCi	0.0036 Ci/m^3	0.77 Ci/m^3	2.0 pCi or 2×10^{-11} Ci/6.37m^3 = 3.14×10^{-12} Ci/m^3, 3.14×10^{-12}/0.0036 = 8.72×10^{-10}	3.14×10^{-12}/ 0.77 = 4.0×10^{-12}
^{60}Co	0.13322Ci	77 Ci/m^3	-	0.13322 Ci/ 6.37 m^3 = 0.020913 Ci/m^3 0.020913/77 = 0.00027	-
^{137}Cs	0.45689 Ci	0.0063 Ci/m^3	13,000 Ci/m^3	0.45689 Ci/ 6.37 m^3 = 0.07172 Ci/m^3, 0.017172/0.0063 = 11.3849	0.07172/13,000 = 0.00007
$^{90}Sr/^{90}Y$	0.07310 Ci	0.0043 Ci/m^3	15,000 Ci/m^3	0.07310 Ci/6.37 m^3 = 0.011476 Ci/m^3, 0.011476/ 0.0043 = 2.66883	0.011476/15,000 = 0.0000008
Sum of Fractions				8.72×10^{-10} + 0.00027 + 11.3849 + 2.66883 = 14, which is >1, therefore not Category 1	4.0×10^{-12} + 0.00007 + 0.0000008 = 0.000071, which is <1, therefore Category 3

2.4.4 Dimensions

The dimensions of the four columns in this box are shown in Table B-14.

Table B-14. Dimensions of Four Lower Vault Columns.

Column identification	Weight (lb)	Diameter (in.)	Length	Volume (ft^3) (bounding case)
Lower 4S	1,720	30	6'5"	31.40
Lower 5S	625	18	6'3"	10.47
Lower 6S	1,720	30	6'5"	31.40
Lower 7S	1,720	30	6'5"	31.40

2.4.5 Total Volume

The total volume of the metal box and contents used for packaging the four columns is based on the volume of the empty metal box, the volume of the columns, the expected void space (nominally 29.4 percent of the volume in the columns), and the volume of the grout used to fill the void space between the columns and the inside walls of the metal box. The weight density of the grout is 118 lb/ft^3. The grout is used to stabilize the columns within the metal box to

meet the 300-year HIC requirement found in Specification HS-V-P-0036. The calculations for total volume of the box containing the four lower vault columns is shown in Table B-15.

Table B-15. Volume of Lower Vault Columns.

Volume of:	Calculation	Total (ft^3)
Empty box	-	225
Columns	(31.40 ft^3 x 3) + 10.47 ft^3	104.67
Void Space	104.67 ft^3 x 29.4%	30.77
Grout	225 ft^3 - 104.67 ft^3 - 30.77 ft^3	89.56

2.4.6 Gross Weight

The gross weight of the four packaged columns in this box is also based on the tare weight of one empty metal box, the weight of the columns, and the weight of the grout multiplied by the volume of grout needed to fill the void space between the columns and the interior walls of the metal box, and a bounding case contingency factor for extra weight. The gross weight of the metal box containing the four columns is shown in Table B-16.

Table B-16. Gross Weight of Metal Box with Four Columns.

Weight of:	Calculations	lb
Metal box (tare)	-	1,620
Columns	(1,720 lb x 3) + 625 lb	5,785
Grout (total)	89.56 ft^3 x 118 lb/ft^3	10,568
Contingency factor (bounding case)	-	3,727
Total (bounding case)		21,700

[1]Per Part No. S 0600-0600-1080-0104.

2.5 CONCLUSIONS

In conclusion, the contents of the metal boxes as described are acceptable for packaging and transfer. The radioactive contents in the payload meets the limitations for Type A packaging as set forth in 49 CFR 173.433 and 49 CFR 173.435. The overweight conditions of the loaded boxes are acceptable as addressed in Part B, Sections 3.0 and 5.0. The dose rates encountered are deemed acceptable based on Part B, Section 4.0. Heat and hydrogen generation are not a concern with these payloads, as discussed in Part B, Sections 6.0 and 7.0. Criticality is not a concern because the payload meets the fissile exempt definition of 49 CFR 173.453, "Fissile Material - Exceptions."

3.0 CONTAINMENT EVALUATION

3.1 INTRODUCTION

The purpose of this evaluation is to demonstrate that the metal boxes packaged in accordance with Part B, Section 2.0 will maintain their contents under normal conditions of transport.

3.2 CONTAINMENT SOURCE SPECIFICATION

The following is the gamma, beta, and alpha contribution for each of the three boxes when packed with the ion exchange columns.

- One box will contain five ion exchange columns from the upper vault. The box also will contain miscellaneous waste and Pyro foam to fill the void space. The box will contain 0.0937 Ci ^{60}Co, 0.0101 Ci ^{137}Cs, and 0.00165 Ci $^{90}Sr/^{90}Y$. The box will weigh at most 8,230 lb.

- A second box will contain three ion exchange columns from the lower vault. The void space inside the box will be filled with grout. The box will contain 0.32730 Ci ^{60}Co, 0.06837 Ci ^{137}Cs, and 0.01094 Ci $^{90}Sr/^{90}Y$. The box will weigh at most 24,900 lb.

- A third box will contain four ion exchange columns from the lower vault. The void space inside the box will be filled with grout. The box will contain 0.13322 Ci ^{60}Co, 0.45689 Ci ^{137}Cs, 2.0 pCi ^{239}Pu, and 0.07310 Ci $^{90}Sr/^{90}Y$. The box will weigh at most 21,700 lb.

The payloads in the boxes are considered LLW. No neutron sources are considered to be present. The payloads also are considered Type A, as indicated in Part B, Section 2.0. Because the quantity is Type A, an analysis of hypothetical accident conditions is not required.

3.3 NORMAL TRANSFER CONDITIONS

The boxes must maintain their respective payloads (see Part B, Section 2.0) under normal conditions of transport, which are described in 10 CFR 71.71.

The packaged ion exchange columns were analyzed using a drop scenario. Additional scenarios that were analyzed were filling the boxes with material to eliminate void space and lifting the boxes.

As indicated in Part B, Section 5.0, a worst case scenario of a horizontal drop on a compact soil and gravel surface was evaluated. Results of the evaluation indicate that a box filled with ion exchange columns and grout will withstand a normal-condition drop without buckling or excessive deformation (see Appendix B-1). However, to achieve this result, the grout must be cured. See Part B, Appendix B-1.

As indicated in Part B, Section 5.4, when filling the void spaces of the box with grout, the boxes must be shored to ensure that the sheet metal walls and bottom are supported during the grouting process. Shoring is required because

the 10 gauge sheet metal walls and 12 gauge sheet metal bottom will not withstand the hydrostatic load of uncured grout without buckling and yield failure.

The lifting evaluation of the box assumes that the worst case strap angle for lifting is 60° from horizontal. The evaluation results (see Part B, Section 5.4) show that the box can be lifted with acceptable margins of safety at angles of 60° or greater from horizontal. However, the grout must be cured for at least 7 days because the package does not have sufficient strength to support the load of uncured grout.

3.4 CONTAINMENT EVALUATION CONCLUSIONS

As indicated in Part B, Section 5.4, the box containment is acceptable for loading, lifting, and transport under the following conditions:

- The metal boxes are properly shored during the Pyro foam and grout filling process.
- The Pyro foam is fully reacted and the grout is cured for a minimum of 7 days before lifting and transporting the boxes.

4.0 SHIELDING EVALUATION

4.1 INTRODUCTION

The purpose of this evaluation is to ensure that the packaging (metal box) and the position of each package on the trailer affords adequate shielding during normal conditions of transport.

4.2 DIRECT RADIATION SOURCE SPECIFICATION

The following is the gamma, beta, and alpha contribution for each of the three boxes when packaged with ion exchange columns:

- One box will contain five ion exchange columns from the upper vault. Miscellaneous waste and Pyro foam will be used to fill the void space inside the box. The box will contain 0.0937 Ci ^{60}Co, 0.0101 Ci ^{137}Cs and 0.00165 Ci $^{90}Sr/^{90}Y$. The box will weigh at most 8,230 lb.

- A second box will contain three ion exchange columns from the lower vault. Grout will be used to fill void space inside the box. The box will contain 0.32730 Ci ^{60}Co, 0.06837 Ci ^{137}Cs and 0.01094 Ci $^{90}Sr/^{90}Y$. The box will weigh at most 24,900 lb.

- A third box will contain four ion exchange columns from the lower vault. Grout will be used to fill the void space inside the box. The box will contain 0.13322 Ci ^{60}Co, 0.45689 Ci ^{137}Cs, 2.0 pCi ^{239}Pu, and 0.07310 Ci $^{90}Sr/^{90}Y$. The box will weigh at most 21,700 lb.

The payloads within the boxes are considered LLW. No neutron sources are considered to be present.

4.3 SUMMARY OF SHIELDING PROPERTIES OF MATERIAL

The metal boxes provide little shielding from radiation other than that afforded by their metal walls.

4.4 NORMAL TRANSFER CONDITIONS

Dose rates on the surface of the metal boxes were evaluated based on survey readings from the surface of each fully loaded metal box. Survey readings were evaluated against U. S. Department of Transportation (DOT) radiation level limitations. The DOT prescribes the following radiation level limitations for shipment of radioactive material in accordance with 49 CFR 173.441, "Radiation Level Limitations":

- A radiation level limit of 200 mRem/hr at the surface of any package shipped via open transport vehicle.

- A radiation level limit of 10 mRem/hr at any point 2 m from the outer lateral surface of the vehicle.

- A radiation level limit of 2 mRem/hr in any normally occupied space (i.e., cab of the tractor).

These limitations must be met during onsite transfers of radioactive material at the Hanford Site, unless they cannot be met safely and economically, taking into account the shielding capability and design of the package, the type of transport vehicle used, and the principles of ALARA.

If these limitations cannot be met, equivalent safety to the DOT radiation level limitations must be achieved through approved administrative controls and principles of ALARA (i.e., time of exposure to the source, distance from the source, and shielding against the source).

4.5 SHIELDING EVALUATION AND CONCLUSIONS

Survey readings indicate that the surface dose rate readings of the boxes exceed DOT limitations (400 mRem/hr at the surface of the package) prescribed in Part B, Section 4.4. Survey readings at 1 m from the linear side of each box (including top and bottom) will not exceed the contact dose rate for any given side of all three boxes loaded together.

Attempting to shield the inner walls of the boxes or reposition the ion exchange columns in the boxes is contrary to ALARA principles. Therefore, if possible, configuring the boxes (if two or more boxes are loaded together) on the trailer used for transfer such that the lowest dose rate readings are exposed to the outside of the trailer is acceptable as an administrative control and method of shielding. No additional shielding is required regardless of box configuration on the trailer.

Exclusion of non-essential workers and the public at the time of transport (see Part A, Section 4.3) provides distance from the source of radiation resulting in dose rates received at contact with the surfaces of the boxes. Exclusion also provides distance from the source of radiation resulting in dose rates received at 2 m from the vertical planes projected by the outer edges of the vehicle (excluding the top and undersides of the vehicle).

The 2-mRem/hr limit at the tractor cab is achieved by the configuration of the boxes on the trailer and the distance between the cab of the tractor and the nearest box (see Part A, Section 4.3). No additional shielding is required for this transfer.

Based on the source term in the boxes, the configuration of the ion exchange columns in the boxes (i.e., ion exchange columns, Pyro foam, and miscellaneous waste; ion exchange columns and grout), the configuration of the boxes on the trailer(s), and the known dose rate readings at contact with the boxes (see Appendix B-1), no additional shielding analysis is required.

APPENDIX B-1

309 BUILDING TANK FARM

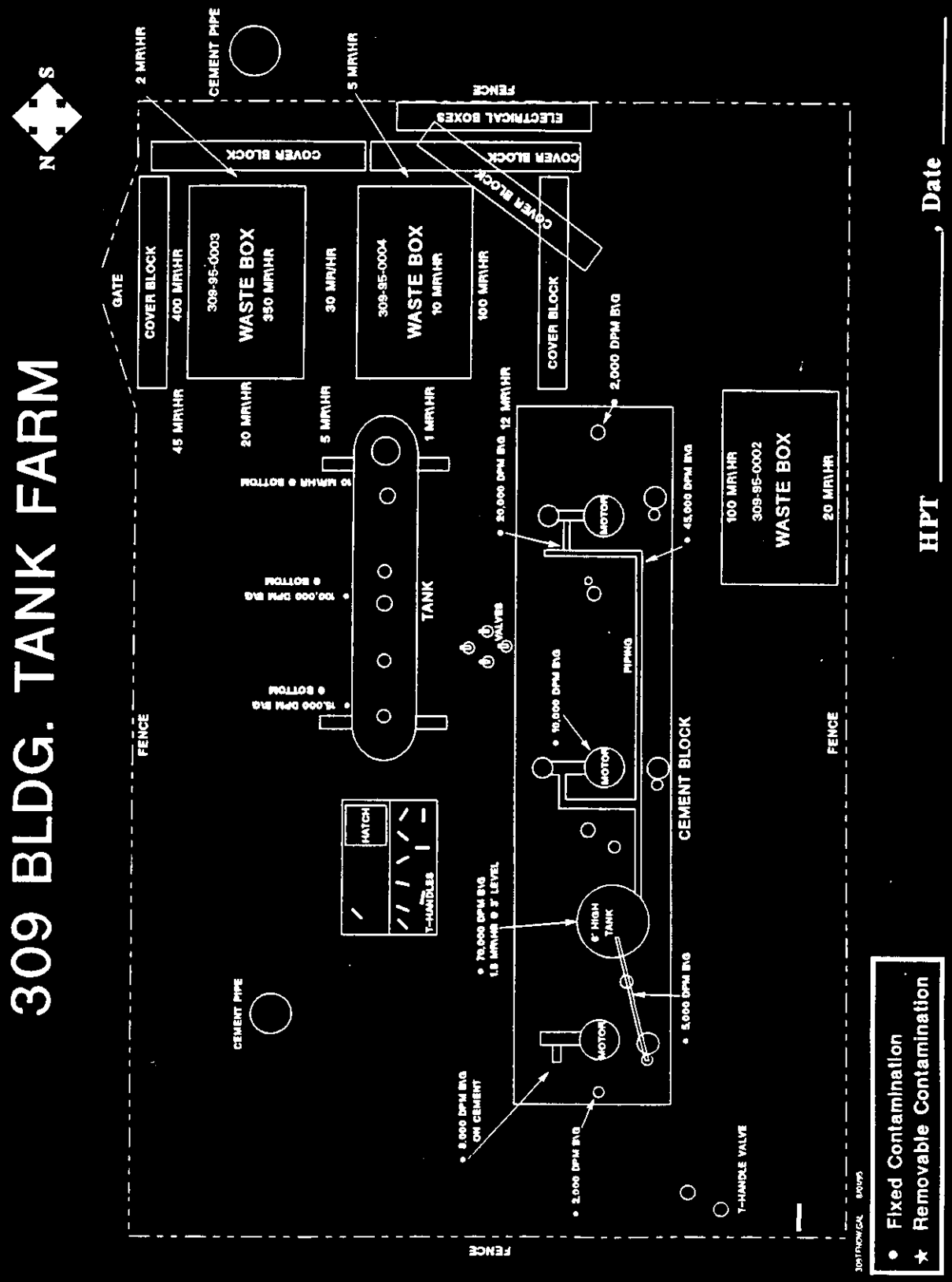
309 BLDG. TANK FARM
N
S
GATE
COVER BLOCK
400 MR\HR
309-95-0003
WASTE BOX
350 MR\HR
30 MR/HR
309-95-0004
WASTE BOX
10 MR\HR
100 MR\HR
COVER BLOCK
2 MR\HR
CEMENT PIPE
5 MR\HR
FENCE
ELECTRICAL BOXES
COVER BLOCK
COVER BLOCK
COVER BLOCK
2,000 DPM B\G
45 MR\HR
20 MR\HR
5 MR\HR
1 MR\HR
12 MR\HR
10 MR/HR @ BOTTOM
100,000 DPM B\G @ BOTTOM
15,000 DPM B\G @ BOTTOM
TANK
20,000 DPM B\G
MOTOR
45,000 DPM B\G
VALVES
PIPING
10,000 DPM B\G
MOTOR
CEMENT BLOCK
100 MR\HR
309-95-0002
WASTE BOX
20 MR\HR
FENCE
FENCE
HATCH
T-HANDLES
70,000 DPM B\G
1.8 MR\HR @ 5' LEVEL
6' HIGH TANK
5,000 DPM B\G
MOTOR
8,000 DPM B\G ON CEMENT
2,000 DPM B\G
T-HANDLE VALVE
CEMENT PIPE
FENCE
HPT _____, Date _____
• Fixed Contamination
★ Removable Contamination

5.0 STRUCTURAL EVALUATION

5.1 INTRODUCTION

This evaluation will determine the structural capabilities of the metal boxes for transport of Type A quantities of radioactive material. In addition, it will show that the boxes will be safe for transport while being loaded beyond the rated capacity of the box.

5.2 STRUCTURAL EVALUATION OF PACKAGE

5.2.1 Structural Design and Features Offered by the Metal Boxes

Specifications for the metal box used to package the ion exchange columns are as follows.

- Overall dimensions: 66 in. wide, 63-1/4 in. deep, 114-3/4 in. long
- Interior dimension: 60 in. wide, 60 in. deep, 108 in. long
- Number of corrugations: 24
- Materials of construction:
  - 10-gauge bottom, 12-gauge lid and sides, A570 hot rolled sheet steel, and A36 structural members and 3/16-in. thick plate
  - Lid reinforcing: Angle 3 in. x 7/16 in. x 3/16 in., around lid perimeter
  - Lid seal: 2-in. wide, 1/4-in. thick, commercial 30 durometer neoprene
  - Lid fasteners: 1/2 in. - 13 x 1-1/2-in. stainless steel bolts and nuts
- Design and Fabrication Methods
  - The boxes used to package the ion exchange columns are welded metal boxes designed in accordance with Capital Industries, Inc. Specification S 0600-0600-1080-0104.

  - Total Weight 1,620 lb
    Weight, box 1,245 lb
    Weight, lid and stiff 375 lb
    Certified weight 7,000 lb
    Maximum gross weight 24,900 lb.
- Volume (Cavity size) 225.0 ft^3, (60 in. x 60 in. x 108 in.)
- Containment Boundary: the containment boundary is the top (including

neoprene lid seal), bottom, and sides of the box containing ion exchange columns, Pyro foam, and miscellaneous waste. The containment boundary for the boxes containing ion exchange columns and grout is the top layer of solidified grout and the sides and bottom of the box. The lid (top) of these boxes is excluded.

- Heat Dissipation: The payload generates a low enough level of heat (less than 1 watt per box) that passive cooling is all that is required.

5.2.2 Chemical and Galvanic Reactions

No chemical or galvanic reactions will affect the ability of the metal boxes to maintain the payloads identified in Part B, Section 2.0.

5.2.3 Lifting and Tiedown Devices

Not applicable. The boxes will be "saddled" using nylon slings because of the overweight conditions of the fully loaded metal boxes.

5.2.4 Positive Closure

The lid fasteners, which are 1/2 in. - 13 x 1-1/2-in. stainless steel bolts and nuts. There is no positive closure mechanism required for the boxes containing grout.

5.2.5 Weights and Center of Gravity

The weight of the packaged columns is assumed to be at the geometric center of the box.

5.2.6 Lifting and Tiedown Devices

Not applicable. The boxes will be "saddled" using nylon slings because of the overweight conditions of the fully loaded metal boxes.

5.3 NORMAL TRANSFER CONDITIONS

Within this evaluation, the ability of the metal boxes to maintain their contents under normal conditions of transport is analyzed using the worst case loading for a normal-condition drop, grout fill, and lifting of the box. In addition, the boxes were analyzed with the lids removed (see Appendix B-2).

5.4 STRUCTURAL EVALUATION AND CONCLUSIONS

The loaded metal boxes consist of the same type of metal box with three different maximum payload weights (i.e., 8,230 lb, 21,700 lb, and 24,900 lb). One box contains Category 1 LLW and therefore requires only Pyro foam as the

void-space filler. This box has a maximum gross weight of 8,230 lb. The other two boxes contain Category 3 LLW that requires stabilization of the waste with grout. The addition of grout to the payload substantially increases the weight of the loaded boxes (21,700 lb and 24,900 lb, respectively).

The orientation and surface of the drop was chosen as a horizontal drop on a compact soil and gravel surface. Evaluation of the drop indicates that the box will withstand a normal-condition drop without buckling or excessive deformation, even with the lids removed from the boxes containing grout. (See Part B, Appendix B-2 for analysis of this drop.)

As indicated in Part B, Appendix B-2, when filling the void spaces of the box with grout, the box must be shored to ensure that the sheet metal walls and bottom are supported during the grouting process. Shoring is required because the 10-gauge sheet metal walls and 12-gauge sheet metal bottom will not withstand the hydrostatic load of uncured grout without buckling and yield failure.

The lifting evaluation of the box assumes that the worst case strap angle for lifting is 60° from horizontal. The evaluation results (see Part B, Appendix B-2) show that the box can be safely lifted with acceptable margins of safety at angles of 60° or greater from horizontal. However, the grout must be cured for at least 7 days because the package does not have sufficient strength to support the load of uncured grout.

In conclusion, safe handling and transport of the boxes is dependent on:

- Properly shoring the boxes during Pyro foam and grout filling operations
- The Pyro foam is fully reacted before lifting and transporting the boxes
- The grout is cured for a minimum of 7 days before lifting and transporting the boxes.

APPENDIX B-2

SHIRAGA ENGINEERING SAFETY EVALUATION

ENGINEERING SAFETY EVALUATION

Subject IXC Containers Drop and Lift Analysis Page 1 of 12
Originator S. S. Shiraga Date 6/07/95
Checker M. D. Clements Date 6/14/95

I. Objective:

The objective of this analysis is to determine the structural capabilities of the IXC metal box containers for transport of Type A quantities of materials. The metal boxes, DOT Specification 7A, Type A containers. However, in this application the boxes are loaded beyond the rated capacity. Subsequently, this evaluation is to show that despite being over loaded, the containers remain safe for transport.

II. Reference:

1) Capital Industries, Inc., Drawing Number S 0600-0600-1080-0104, *Shipping Container-DOT Spec 7A, Type A.*

2) Burnside, M. E., cc:Mail to S. S. Shiraga, *re: IXC Box Weights*, June 1, 1995.

3) Rinehart, J. S., and Pearson, J., *Behavior of Metals Under Impulsive Loads*, American Society for Metals, Cleveland, Ohio, 1954.

4) Young, W. C., *Roark's Formulas for Stress and Strain*, McGraw-Hill, New York, New York, 1989.

5) Timoshenko, S. and Woinowsky-Krieger, S., *Theory of Plates and Shells*, McGraw-Hill, New York, New York, 1959.

III. Results and Conclusions:

There are three types of packages. The packages consist of the same container loaded with three different payload weights and grout filling. Within this evaluation, the worst case loading is evaluated for normal condition drop, grout fill and lifting. All the evaluations are based on classic linear elastic methods augmented by free body diagrams.

Results of the normal condition drop shows that in the three drop conditions the loading is approximately the same. Subsequently, the highest dynamically loaded case was chosen for the normal condition drop evaluation. The orientation and surface of drop for this evaluation was chosen as a flat horizontal drop onto a compact soil and gravel surface. Evaluation of the highest dynamic load shows that the package will withstand a normal condition drop without buckling or excessive deformation. However, in all cases the grout must be fully cured.

The container is modeled as vertical panels subjected to the deceleration loading of the lid. The panels are evaluated by comparing the critical buckling load versus the decelerated load of the lid. The U-Channels at the bottom of the container are evaluated as beams on an elastic foundation loaded by the full dynamic load of the package.

ENGINEERING SAFETY EVALUATION

Subject IXC Containers Drop and Lift Analysis Page 2 of 12
Originator S. S. Shiraga Date 6/07/95
Checker M. D. Clements Date 6/14/95

Evaluation results of grout filling shows that the sheet metal walls and bottom package must be shored. Without proper support, the 10 gauge sheet metal walls and 12 gauge sheet metal bottom will not withstand the hydrostatic load of the uncured grout. Lack of support results in buckling and yield failure of the sheet metal.

Grout fill loadings are modeled by assuming the bottom and walls are flat uniform plates. The bottom is assumed to be uniformly loaded and simply supported on all sides, the walls are assumed to be loaded by fluid pressure and simply supported on three sides and free on the other. Results of the evaluation shows the plates experience large deflections, consequently the ultimate load capacity of the plates is determined. These calculations show that the bottom and walls are loaded beyond their load carrying capacity when the grout is in its fluid stage. Consequently, during grout fill the containers must be properly shored to provide adequate support.

The lifting evaluation of the package assumes that the worst case strap angle for lifting is 60° from horizontal. The evaluation results show that the package can be safely lifted with acceptable margins of safety at lift angles of 60° or greater from the horizontal. The evaluation assumes the grout is fully cured and has a strength of 2,000 psi. This is required, since the packaging does not have sufficient strength to support the loaded of uncured grout and must rely on the strength and rigidity of the cured grout for safe lifting operations.

Consequently, safe handling and transport of the package is dependent upon two primary factors. First the container must properly supported during grout void filling operations. Also, the grout must be fully cured prior to package lifting and transport.

ENGINEERING SAFETY EVALUATION

Subject IXC Containers Drop and Lift Analysis Page 3 of 12
Originator S. S. Shiraga Date 6/07/95
Checker M. D. Clements Date 6/14/95

IV. Engineering Evaluation:

Assume a 2 ft, 3 ft and 4 ft flat horizontal drop on sand and gravel for normal conditions of transport. Also assume container design is the same for all three containers.

Weights and drop heights of containers (M. E. Burnside, Calculations): $i = 1..3$

Container #1: $Wc_1 = 8{,}230$ lb Drop height: $H_1 = 4$ ft

Container #2: $Wc_2 = 24{,}900$ lb Drop height: $H_2 = 2$ ft

Container #3: $Wc_3 = 21{,}700$ lb Drop height: $H_3 = 3$ ft

Weight of container lid: $W_{lid} = 380$ lb

Empty container weight: $W_{cont} = 1{,}245 \text{ lb} + W_{lid}$

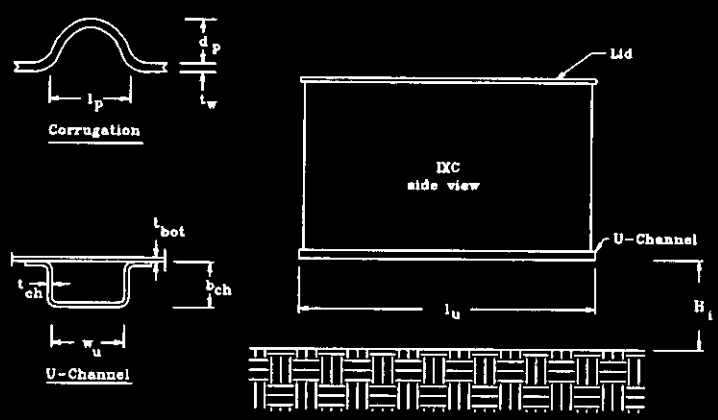

Determine "g" loading from empirical equations and data developed by Rinehart and Pearson in "Behavior of Metals Under Impulsive Loads."

Impact area of container is on 5 U-channels located at bottom of container:

Impact length: $l_u = 64$ in Imact width: $w_u = 5.5$ in

$$A_u = 5 l_u w_u$$

ENGINEERING SAFETY EVALUATION

Subject IXC Containers Drop and Lift Analysis Page 4 of 12
Originator S. S. Shiraga Date 6/07/95
Checker M. D. Clements Date 6/14/95

Material parameters for impact on sand and gravel (Rinehart and Pearson):

$$a_{sg} = 620 \text{ psi} \qquad b_{sg} = 0.0115 \frac{\text{lb-sec}^2}{\text{ft}^2\text{in}^2}$$

Energies of drop: $E_i = Wc_i H_i$

$E_1 = 32{,}920$ lb-ft $\qquad E_2 = 49{,}800$ lb-ft $\qquad E_3 = 65{,}100$ lb-ft

Velocity of impact: $v_i = \sqrt{2gH_i}$

$v_1 = 16.04$ ft-sec^{-1} $\qquad v_2 = 11.34$ ft-sec^{-1} $\qquad v_3 = 13.89$ ft-sec^{-1}

Depth of penetration into soil, (Rinehart and Pearson, Behavior of Metals Under Impulsive Load):

$$\delta d_i = \frac{Wc_i}{2gb_{sg}A_u} \ln\left[1 + \left(\frac{b_{sg}}{a_{sg}}\right)(v_i)^2\right]$$

$\delta d_1 = 0.36$ in $\qquad \delta d_2 = 0.55$ in $\qquad \delta d_3 = 0.71$ in

Force transmitted to package: $Fd_i = \frac{E_i}{\delta d_i}$

$Fd_1 = 1{,}094{,}000$ lb $\qquad Fd_2 = 1{,}093{,}000$ lb $\qquad Fd_3 = 1{,}093{,}000$ lb

Resultant "g" loading: $gdec_i = \frac{Fd_i}{Wc_i}$

$gdec_1 = 132.9$ $\qquad gdec_2 = 43.88$ $\qquad gdec_3 = 50.38$

Evaluate buckling for highest "g" load

Assume grout does not bond to container. Therefore loading from lid on side walls of container.

Wall thickness of container: $t_{wall} = 0.104$ in 12 gauge material.

ENGINEERING SAFETY EVALUATION

Subject IXC Containers Drop and Lift Analysis Page 5 of 12
Originator S. S. Shiraga Date 6/07/95
Checker M. D. Clements Date 6/14/95

Effective length of walls bearing load, including corrugations:

Assume corrugations are parabolic.

Height: $d_p = 1.25$ in Width: $l_p = 1.6875$ in

Length of arc of each corrugation:

$$s_p = \frac{1}{2}\sqrt{16 d_p^2 + l_p^2} + \frac{l_p^2}{8 d_p} \ln\left(\frac{4 d_p + \sqrt{16 d_p^2 + l_p^2}}{l_p}\right) \qquad s_p = 3.15 \text{ in}$$

Number of corrugations: $n_{corr} = 24$

Length of wall without corrugations:

$$l_{wall} = 4(30.1 \text{ in} - 2 l_p + 1.25 \text{ in}) + 2(108 \text{ in} - 8 l_p)$$

Total length of walls: $l_{tot} = l_{wall} + n_{corr} s_p \qquad l_{tot} = 377$ in

Compressive load on walls: $p_{wall} = \frac{g d e c_1 W_{lid}}{l_{tot} t_{wall}} \qquad p_{wall} = 1{,}290$ psi

Assume each section between corrugations is a panel. Treat panel as simply supported on the edges by the corrugations and pinned at top and bottom. Determine critical loading, for a wide column, for the widest section.

Widest panel section: $b_{pan} = 18 \text{ in} - l_p$

Height of simply supported edges: $h_p = 59.8125$ in

Ratio for buckling pattern: $m = \frac{h_p}{b_{pan}} \qquad m = 3.67$

Constant: $k = \left(\frac{h_p}{m b_{pan}} + \frac{m b_{pan}}{h_p}\right)^2 \qquad k = 4$

Critical buckling stress on panel (Roark, 6th Edition):

Assumed modulus of elasticity: $E_{stl} = 29{,}600{,}000$ psi

ENGINEERING SAFETY EVALUATION

Subject IXC Containers Drop and Lift Analysis Page 6 of 12
Originator S. S. Shiraga Date 6/07/95
Checker M. D. Clements Date 6/14/95

Assume Poisson's ratio: $\nu_{cstl} = 0.3$

$$\sigma_{cr} = \frac{\pi^2 k E_{cstl}}{12(1 - \nu_{cstl}^2)}\left(\frac{t_{wall}}{b_{pan}}\right)^2 \qquad \sigma_{cr} = 4{,}350 \text{ psi}$$

Margin of safety: $MS_{cr} = \frac{\sigma_{cr}}{p_{wall}} - 1 \qquad MS_{cr} = 2.37$ OK

Evaluate loading on U-channel:

Load on bottom supports:

Assume uniform distribution of load from heaviest load. Load distributed on 5 bottom supports.

Load per support: $F_s = \frac{Fd_i}{5} \qquad F_s = 218{,}761 \text{ lb}$

Treat as a beam on elastic foundation.

Model flat drop as a beam on an elastic foundation:

Assume drop, use as an elastic foundation (Roark, 6th Edition):

Length of support: $l = l_u$

Foundation modulus (Timoshenko, Theory of Shells and Plates): $k_{grav} = 750$ psi

Channel dimensions: $d_{ch} = 5.5$ in $\quad b_{ch} = 1.875$ in $\quad t_{ch} = 0.1875$ in

$a_{ch} = b_{ch} - t_{ch}$

Distance to the center of gravity: $$x_{bch} = \frac{\frac{d_{ch} t_{ch}^2}{2} + 2(a_{ch} t_{ch})\left(t_{ch} + \frac{a_{ch}}{2}\right)}{d_{ch} t_{ch} + 2 a_{ch} t_{ch}}$$

Moment of inertia: $$I_{ch} = \frac{d_{ch} x_{bch}^3 - d_{ch}(x_{bch} - t_{ch})^3 + 2 t_{ch}(b_{ch} - x_{bch})^3}{3}$$

Force per unit length: $F_{len} = \frac{F_s}{l}$

ENGINEERING SAFETY EVALUATION

Subject IXC Containers Drop and Lift Analysis Page 7 of 12
Originator S. S. Shiraga Date 6/07/95
Checker M. D. Clements Date 6/14/95

Cross sectional area of channel: $A_{ch} = t_{ch}(d_{ch} + 2b_{ch})$

Loading parameters:

Beam loading location: $a_1 = 0$ in Evaluation location: $x_1 = \frac{1}{2}$

Foundation factor: $\beta = \left(\frac{k_{grav}}{4 E_{cstl} I_{ch}}\right)^{\frac{1}{4}}$

Calculational constants:

$C_{11} = \sinh(\beta l)^2 - \sin(\beta l)^2$ $C_2 = \cosh(\beta l)\sin(\beta l) + \sinh(\beta l)\cos(\beta l)$

$C_3 = \sinh(\beta l)\sin(\beta l)$ $C_4 = \cosh(\beta l)\sin(\beta l) - \sinh(\beta l)\cos(\beta l)$

$C_{a2} = \cosh[\beta(l - a_1)]\sin[\beta(l - a_1)] + \sinh[\beta(l - a_1)]\cos[\beta(l - a_1)]$

$C_{a3} = \sinh[\beta(l - a_1)]\sin[\beta(l - a_1)]$ $F_1 = \cosh(\beta x_1)\cos(\beta x_1)$

$F_2 = \cosh(\beta x_1)\sin(\beta x_1) + \sinh(\beta x_1)\cos(\beta x_1)$

$F_3 = \sinh(\beta x_1)\sin(\beta x_1)$ $F_4 = \cosh(\beta x_1)\sin(\beta x_1) - \sinh(\beta x_1)\cos(\beta x_1)$

$F_{a2} = \cosh[\beta(x_1 - a_1)]\sin[\beta(x_1 - a_1)] + \sinh[\beta(x_1 - a_1)]\cos[\beta(x_1 - a_1)]$

$F_{a3} = \sinh[\beta(x_1 - a_1)]\sin[\beta(x_1 - a_1)]$

$\theta_A = \frac{F_{len}}{2 E_{cstl} I_{ch} \beta^3} \frac{C_2 C_{a3} - C_3 C_{a2}}{C_{11}}$ $y_A = \frac{F_{len}}{4 E_{cstl} I_{ch} \beta^4} \frac{C_4 C_{a2} - 2 C_3 C_{a3}}{C_{11}}$

$R_A = 0$ lb $M_A = 0$ lb-in

Shear force:

$$V_1 = R_A F_1 - y_A 2 E_{cstl} I_{ch} \beta^3 F_2 - \theta_A 2 E_{cstl} I_{ch} \beta^2 F_3 - M_A \beta F_4 - \frac{F_{len} F_{a2}}{2\beta^2 (l - a_1)}$$

$$V_1 = 38{,}062.8 \text{ lb}$$

ENGINEERING SAFETY EVALUATION

Subject IXC Containers Drop and Lift Analysis Page 8 of 12
Originator S. S. Shiraga Date 6/07/95
Checker M. D. Clements Date 6/14/95

Moment:

$$M_1 = M_A F_1 + \frac{R_A}{2\beta} F_2 - y_A 2 E_{cstl} I_{ch} \beta^2 F_3 - \theta_A E_{cstl} I_{ch} \beta F_4 - \frac{F_{len} F_{a3}}{2\beta^2} \qquad M_1 = 0 \text{ lb-in}$$

Bending stress: $\sigma_{ben} = \dfrac{M_1 \frac{b_{ch}}{2}}{I_{ch}}$ $\qquad \sigma_{ben} = 0$ psi

Maximum shear stress: $\sigma_{ten} = \dfrac{V_1}{A_{ch}}$ $\qquad \sigma_{ten} = 26{,}142$ psi

ASTM A-36 properties: $s_{yo} = 36{,}000$ psi $\qquad s_{uo} = 58{,}000$ psi

Dynamic allowable based on static yield and ultimate of A-36 (Reference Crede and Harris):

Value of constant for when some yielding can be tolerated: $C = 0.5$

Establish dynamic allowable of yield:

$$s_{day} = \frac{2}{3}[s_{yo} + C(s_{uo} - s_{yo})] \qquad s_{day} = 31{,}333 \text{ psi}$$

Margin of safety: $MS_u = \dfrac{s_{day}}{\sigma_{ten}} - 1$ $\qquad MS_u = 0.2$

Loading due to grout fill operations:

Base evaluation on heaviest load for grout fill operation. Since wet grout has no rigidity, assume the loading is from a amporphous mass with no structural integrity on the bottom of the container until cure.

Density of grout: $\rho_{gr} = 118 \dfrac{lb}{ft^3}$ Volume of container void: $V_{cv} = 138.7 \text{ ft}^3$

Weight: $W_{gr} = \rho_{gr} V_{cv}$ Bottom thickness: $t_{bot} = 0.134$ in

Area of bottom: $l_{bot} = 111.5$ in $\quad w_{bot} = 63$ in $\quad A_{bot} = w_{bot} l_{bot}$

Load per unit area on bottom: $p_{bot} = \dfrac{W_{gr}}{A_{bot}}$ $\qquad p_{bot} = 2$ psi

ENGINEERING SAFETY EVALUATION

Subject IXC Containers Drop and Lift Analysis Page 9 of 12
Originator S. S. Shiraga Date 6/07/95
Checker M. D. Clements Date 6/14/95

Model section between bottom supports as a rectangular simply supported and uniformly loaded.

Width of section between supports: $w_{sec} = 48\text{ in} - 2(7.875\text{ in})$

Length to width ratio: $\frac{l_{bot}}{w_{sec}} = 3.46$

Deflection of bottom plate: $y_{bot} = \frac{0.135 p_{bot} w_{sec}^4}{E_{cstl} t_{bot}^3}$ $y_{bot} = 4.78\text{ in}$

Excessive deflection, must determine ultimate capacity of plate.

$\frac{w_{sec}}{l_{bot}} = 0.29$ $s_y = 36{,}000\text{ psi}$ $W_u = 7.68 s_y t_{bot}^2$ $W_u = 4{,}964\text{ lb}$

$p_u = \frac{W_u}{l_{bot} w_{sec}}$ $p_u = 1.38\text{ psi}$

Margin of safety: $MS_{bot} = 1 - \frac{p_{bot}}{p_u}$ $MS_{bot} = -0.69$ **No Good!**

Therefore bottom must be shored when void filling with grout at least between channel sections.

Load on side walls of container:

Density of sand: $\rho_{gr} = 118\ \frac{lb}{ft^3}$ $p_{gr} = \rho_{gr} h_p$ $p_{gr} = 4.08\text{ psi}$

Deflection at bottom of walls: $y_{sw} = \frac{0.069 p_{gr} b_{pan}^4}{E_{cstl} t_{wall}^3}$ $y_{sw} = 0.6\text{ in}$

Since deflection greater than thickness, determine ultimate capacity:

$\frac{p_{gr} b_{pan}^4}{E_{cstl} t_{wall}^4} = 83.52$ $\frac{b_{pan}}{h_p} = 0.27$

Ultimate capacity: $p_{side} = \frac{\frac{\pi}{2} s_y t_{wall}^2}{b_{pan} h_p}$ $p_{side} = 0.63\text{ psi}$

ENGINEERING SAFETY EVALUATION

Subject IXC Containers Drop and Lift Analysis Page 10 of 12
Originator S. S. Shiraga Date 6/07/95
Checker M. D. Clements Date 6/14/95

Margin of safety: $MS_{side} = 1 - \frac{P_{gr}}{P_{side}}$ $MS_{side} = -5.52$ **NO GOOD!**

Therefore bottom must be shored when void filling.

Lifting evaluation:

Assume lift is done when grout is fully cured, therefore grout bears entire weight of the load. Assume no strength contribution from payload. Assume lift angle at worst case is at 60° from horizontal and straps are inserted through the channel sections.

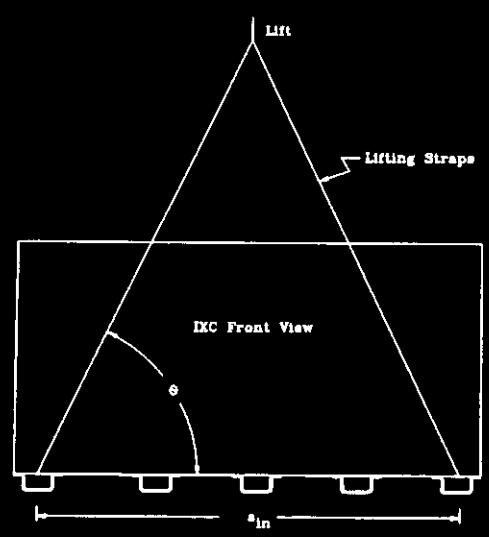

Dimensions of grout block (inside dimensions of container):

Length: $l_{in} = 108$ in

Height: $h_{in} = 60$ in

Width: $w_{in} = 60$ in

Span of straps:

$s_{in} = (31.625 \text{ in} - 27 \text{ in}) + 48 \text{ in} + 2.27 \text{ in}$

$s_{in} = 106.62$ in

Span to depth ratio: $\frac{s_{in}}{h_{in}} = 1.78$

Since ratio < 4, must consider as short beam.

Assume lift angle from horizontal is: $\theta = 60$ deg

Vertical load: $F_v = \frac{Wc_2}{2}$ Tension in leg: $T_v = \frac{F_v}{\sin(\theta)}$

Horizontal load: $F_h = T_v \cos(\theta)$ $F_h = 7,188$ lb

ENGINEERING SAFETY EVALUATION

Subject IXC Containers Drop and Lift Analysis Page 11 of 12
Originator S. S. Shiraga Date 6/07/95
Checker M. D. Clements Date 6/14/95

Model as uniformly loaded simply supported beam.

Assume strength of grout: $f_{gr} = 2{,}000$ psi

Modulus of elasticity of grout: $E_{gr} = (57{,}000\ f_{gr}^{0.5})\ \text{psi}^{0.5}$

Moment of inertia of grout block cross section: $I_{gr} = \frac{h_{in}^4}{12}$

Maximum moment at center:

Loading factor: $k_1 = \sqrt{\frac{F_v}{E_{gr} I_{gr}}}$

$$M_{max} = \frac{Wc_2}{k_1^2 s_{in}}\left(\frac{k_1 s_{in}}{2\sin\left(\frac{k_1 s_{in}}{2}\right)} - 1\right) \qquad M_{max} = 110{,}624 \text{ lb-in}$$

Bending stress: $\sigma_b = \frac{M_{max}\frac{h_{in}}{2}}{I_{gr}}$ $\sigma_b = 3$ psi

Short beam shear stress: $\tau = \frac{Wc_2 h_{in}^2}{8 I_{gr}}$ $\tau = 10$ psi

Principle stress: $\sigma_p = \frac{\sigma_b}{2} + \sqrt{\left(\frac{\sigma_b}{2}\right)^2 + \tau^2}$ $\sigma_p = 12$ psi

Margin of stress: $MS_{gr} = \frac{f_{gr}}{\sigma_p} - 1$ $MS_{gr} = 165.33$ **OK**

Lateral load on channel welds: $s_{aw} = 13{,}000$ psi $w_{weld} = \frac{3}{16}$ in

$$f_{allow} = s_{aw}(0.707)\,w_{weld} \qquad f_{allow} = 1{,}723.31\ \frac{\text{lb}}{\text{in}}$$

Amount of weld required: $l_{wreq} = \frac{F_h}{f_{allow}}$ $l_{wreq} = 4.17$ in

ENGINEERING SAFETY EVALUATION

Subject IXC Containers Drop and Lift Analysis Page 12 of 12
Originator S. S. Shiraga Date 6/07/95
Checker M. D. Clements Date 6/14/95

Amount of weld available:

Length of channel: $l_{ch} = 64\ \text{in}$ $\quad l_{weld} = 2\left(\frac{l_{ch} - 12\ \text{in}}{4\ \text{in}}\right)2\ \text{in}$ $\quad l_{weld} = 52\ \text{in}$

Margin of safety: $MS_{weld} = \frac{l_{weld}}{l_{wreq}} - 1$ $\quad MS_{weld} = 11.47$ OK

ENGINEERING SAFETY EVALUATION

Subject IXC Grout Drop Loading (w/o Lid) Page 1 of 3
Originator S. S. Shiraga Date 09/05/95
Checker H. E. Adkins, Jr. Date 09/07/95

I. **Objectives:**

The objective of this evaluation is determine if the packaging grout will maintain sufficient structural integrity to allow shipment without the lid. The criteria for this evaluation is that the grout must maintain encapsulation of the contents under the normal conditions of transport drop onto asphalt.

II. **References:**

1) Capital Industries, Inc., Drawing Number S 0600-0600-1080-0104, *Shipping Container-DOT Spec 7A, Type A.*

2) Burnside, M. E., cc:Mail to S. S. Shiraga, re: *IXC Box Weights*, June 1, 1995.

3) England, J. L., Internal Memo to M. E. Burnside, *Compressive Strength Results*, Dated August 22, 1995.

4) ACI, *ACI Manual of Concrete Practice*, Part 3, American Concrete Institute, Detroit, Michigan, 1989.

5) Den Hartog, J. P., *Advanced Strength of Materials*, McGraw-Hill Book Company, New York, New York, 1952.

III. **Results and Conclusions:**

Results from this evaluation show that the grout will maintain encapsulation of the contents after a normal conditions of transport drop. In other words, the grout will not fragment or collapse after a normal condition drop.

This evaluation is based on the compressive strength of the grout provided in Reference 3 and the assumption that the grout behaves in the same manner as normal concrete. The evaluation determines the loading on the grout by modeling it as a monolithic plate supported at intervals. The resulting bending stresses from this model show the stresses in the grout do not exceed the strength of the grout. Also, no strength or reinforcing contribution by the payload is considered within the evaluation.

ENGINEERING SAFETY EVALUATION

Subject IXC Grout Drop Loading (w/o Lid) Page 2 of 3
Originator S. S. Shiraga Date 09/05/95
Checker H. E. Adkins, Jr. Date 09/07/95

IV. Engineering Evaluation:

Determine if strength of grout is adequate for package to be shipped without the lid and maintain encapsulation of the payload under normal conditions of transport.

Assume all of the deceleration force is applied to grout block.

Deceleration force: $Fd_i = 1{,}094{,}000$ lb

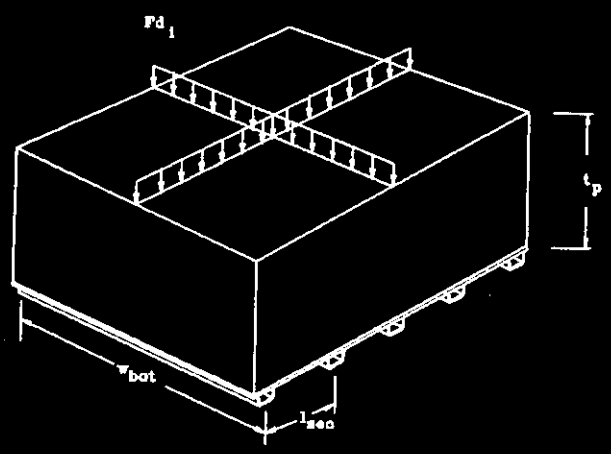

Model as a continuous slab, uniformly loaded and supported in section. Assume loading is uniform over the entire surface of the block.

Length of entire slab: $l_{bot} = 111.5$ in

Width of slab: $w_{bot} = 63$ in

Length of section: $l_{sec} = \frac{l_{bot}}{4}$

Area of slab: $A_{bot} = l_{bot} w_{bot}$

Compressive load on grout due to deceleration: $p_{comp} = \frac{Fd_i}{A_{bot}}$ $p_{comp} = 156$ psi

Thickness of slab: $t_p = 60$ in

Determine loading per Den Hartog, p. 134, case 25:

Dimensional ratio: $\frac{w_{bot}}{l_{sec}} = 2.26$ Dimensionless moment factor: $df_m = 0.0829$

Dimensionless deflection factor: $df_d = 0.032$

Strength of grout: $s_{grout} = 3{,}200$ psi

ENGINEERING SAFETY EVALUATION

Subject IXC Grout Drop Loading (w/o Lid) Page 3 of 3
Originator S. S. Shiraga Date 09/05/95
Checker H. E. Adkins, Jr. Date 09/07/95

Modulus of elasticity:

For normal weight concrete (ACI, p. 318/318R-83), concrete modulus of elasticity:

$$E_c = (57{,}000\, s_{grout}^{0.5})\,\mathrm{psi}^{0.5}$$

Maximum moment at center:

Moment: $M_t = df_m p_{comp} w_{bot}^2$ $\quad M_t = 51{,}243$ lb

Deflection: $\delta_p = df_d \dfrac{p_{comp} w_{bot}^4}{E_c t_p^3}$ $\quad \delta_p = 0.0001$ in

Since deflection is significantly less than 40% of the thickness, small deflection theory still applies.

Bending stress in plate: $\sigma_b = 6\dfrac{M_t}{t_p^2}$ $\quad \sigma_b = 85$ psi

Margin of safety: $MS = \dfrac{s_{grout}}{\sigma_b} - 1$ $\quad MS = 36.47$

Therefore grout will not fail under a normal condition drop onto asphalt.

6.0 THERMAL EVALUATION

6.1 INTRODUCTION

The purpose of this evaluation is to show that the DOT 7A, Type A metal box (Capital Industries, Inc. Part No. S 0600-0600-1080-0104) containment is not threatened by heat generated by the ion exchange columns within the package during normal conditions of transport.

6.2 SUMMARY OF THERMAL PROPERTIES OF MATERIALS

The columns generate less than 1 watt per metal box based on the characterization provided in Part B, Section 2.0. The heat generation per box is calculated as follows:

- Box containing five columns:

^{137}Cs: 0.0103 Ci/box x 4.72 x 10^{-3} watts/Ci = 4.86 x 10^{-5} watts/box.

^{60}Co: 0.0937 Ci/box x 1.54 x 10^{-2} watts/Ci = 1.44 x 10^{-3} watts/box.

^{90}Sr: 1.65 x 10^{-3} Ci/box x 6.70 x 10^{-3} watts/Ci = 1.1 X 10^{-5} watts/box.
4.86 X 10^{-5} + 1.44 X 10^{-3} + 1.1 X 10^{-5} = 1.5 X 10^{-3} total watts/box.

- Box containing three columns:

^{137}Cs: 0.06837 Ci/box x 4.72 x 10^{-3} watts/Ci = 3.23 x 10^{-4} watts/box.

^{60}Co: 0.32730 Ci/box x 1.54 x 10^{-2} watts/Ci = 5.0 x 10^{-3} watts/box.

^{90}Sr: 0.01094 Ci/box x 6.70 x 10^{-3} watts/Ci = 7.32 x 10^{-5} watts/box.

3.23 x 10^{-4} + 5.0 x 10^{-3} + 7.32 x 10^{-5} = 5.4 x 10^{-3} total watts/box.

- Box containing four columns:

^{137}Cs: 0.45689 Ci/box x 4.72 x 10^{-3} watts/Ci = 2.16 x 10^{-3} watts/box.

^{60}Co: 0.13322 Ci/box x 1.54 X 10^{-2} watts/Ci = 2.1 x 10^{-3} watts/box.

^{90}Sr: 0.07310 Ci/box x 6.70 x 10^{-3} watts/Ci = 4.9 x 10^{-4} watts/box.

2.16 x 10^{-3} + 2.1 x 10^{-3} + 4.9 x 10^{-4} = 4.75 x 10^{-3} total watts/box.

6.3 SUMMARY OF THERMAL PROPERTIES OF MATERIALS

The amount of thermal output from the radioactivity within the packaged ion exchange columns is minimal (less than 1 watt per package). Therefore, the payloads within the boxes will not cause the boxes to exceed the requirements of 49 CFR 173.442, "Thermal Limitations." The metal boxes are certified to meet 7A,

Type A requirements of 49 CFR 173.412, "Additional Requirements for Type A Packages" in accordance with WHC-EP-0058, *Test and Evaluation Document for DOT 7A, Type A Packages*.

6.4 THERMAL EVALUATION FOR NORMAL TRANSFER CONDITIONS

The metal box is designed and constructed to meet applicable requirements of 49 CFR 173.412, "Additional Requirements for Type A Packages" in accordance with WHC-EP-0058, *Test and Evaluation Document for DOT 7A, Type A Packaging*, Section 3.0, and Table C-3. In addition, the metal boxes must be designed, constructed, and loaded in accordance with the requirements of 49 CFR 173.442 such that:

- The heat generated within the package because of the radioactive contents will not, at any time during transportation, affect the integrity of the package under normal conditions of transportation
- The temperature of the accessible external surfaces of the loaded package will not, assuming still air in the shade at an ambient temperature of 38°C (100°F), exceed either of the following:
  - 50°C (122°F) in other than an exclusive-use shipment
  - 82°C (180°C) in an exclusive-use shipment.

6.5 THERMAL EVALUATION AND CONCLUSIONS

WHC-EP-0058, Table C-3 (d) documents that the metal box would maintain containment and shielding during transportation and storage in a temperature range of -40°C (-40°F) to 70°C (158°F) with account being taken of the possibility of brittle fracture. In addition, per Table C-3, metals used in these boxes will not become excessively brittle at -40°C and all gaskets used also meet this requirement. The metal box is not approved for liquids, so freezing of contents is not a concern. Table C-3 goes on to indicate that temperatures of +70°C will not result in any significant decrease in containment integrity.

The PRTR ion exchange columns packaged inside the metal boxes exhibit minimal characteristics of thermal decay heat generation based on the amount of radionuclides present (i.e., <1 watt per box). Because the heat generated by the radionuclides is insignificant, the temperature of the external surface of the box will approach ambient. Furthermore, the external surfaces of the box will not see temperature extremes during transportation above 70°C or below -40°C at the Hanford Site. Therefore, no further evaluation is required.

7.0 PRESSURE AND GAS EVALUATION

7.1 GAS GENERATION

The purpose of this evaluation is to predict hydrogen gas generation and pressure buildup in the 12 ion exchange columns based on column characterization.

Hydrogen generation and pressure buildup can occur within a package as a result of the radiolytic decomposition of the package contents.

The ion exchange columns contain mixed anion and cation resin in approximately equal amounts and water. Based on the source term provided for each column and conservative values used for calculation, the radiolytic gas generation was predicted. The source terms (input values) are shown in Table B-17.

Table B-17. Input Values Used in Spreadsheet.

Column ID #	Activity (Ci)			Resin Volume (ft^3)	Resin Mixture Density lb/ft^3	Void Space (ft^3)
	^{137}Cs	^{60}Co	$^{90}Sr/^{90}Y$			
BIX-5	1.7E-5	5.8E-4	2.7E-6	25.9	46.12	9.97
IX-1	1.3E-4	1.9E-3	2.0E-5	22.1	46.12	9.30
IX-2	4.2E-5	1.6E-3	6.8E-6	7.90	46.12	2.57
IX-3F	1.0E-2	8.8E-2	1.6E-3	7.90	46.12	2.57
IX-3	1.1E-4	1.2E-3	1.7E-5	7.90	46.12	2.57
Lower 1S	1.2E-2	2.5E-1	1.9E-3	7.90	46.12	2.57
Lower 2S	2.0E-3	7.9E-2	3.2E-4	7.90	46.12	2.57
Lower 3S	5.5E-2	9.3E-4	8.7E-3	22.1	46.12	9.30
Lower 4S	3.0E-1	3.0E-2	4.8E-2	22.1	46.12	9.30
Lower 5S	4.6E-3	1.0E-1	7.3E-4	7.90	46.12	2.57
Lower 6S	1.0E-1	1.0E-3	1.6E-2	22.1	46.12	9.30
Lower 7S*	5.2E-2	1.1E-4	8.3E-3	22.1	46.12	9.30

*Pu estimated at ≤2 pCi, input values 2.0e-12 Ci for Pu-238, Pu-239, Pu-240, Pu-241, Pu-242, and Am-241.

7.2 PACKAGE PRESSURE AND FLAMMABLE GAS CONCLUSIONS

No appreciable amounts of hydrogen generation or pressure buildup is expected from the ion exchange columns because no pressure (psi) will be generated in 10 years (see Table B-18). The metal boxes (Capital Industries Specification No. S-0600-0600-1080-0104), the contents configuration, and source term within the boxes are acceptable for transfer.

Table B-18 provides H_2 generation results based on the evaluation found in Appendix B-3.

Table B-18. H_2 Generation Results.

Column ID #	Years Sealed	Gas Generation Rate at 10 Years (cc/hr)	Hydrogen Concentration at 10 Years	Pressure at 10 Years (psi)
BIX-5	10	9.9E-06	0.00031%	0.0
IX-1	10	3.3E-5	0.0011%	0.0
IX-2	10	2.7E-5	0.0033%	0.0
IX-3F	10	1.6E-3	0.19%	0.0
IX-3	10	2.2E-5	0.0026%	0.0
Lower 1S	10	4.3E-3	0.52%	0.0
Lower 2S	10	1.3E-3	0.16%	0.0
Lower 3S	10	8.5e-4	0.028%	0.0
Lower 4S	10	5.1e-3	0.17%	0.0
Lower 5S	10	1.7e-3	0.21%	0.0
Lower 6S	10	1.5e-3	0.051%	0.0
Lower 7S	10	7.9e-4	0.026%	0.0

APPENDIX B-3

ENGINEERING SAFETY EVALUATION:
ION EXCHANGE COLUMN H_2 GENERATION ENGINEERING SAFETY EVALUATION

ENGINEERING SAFETY EVALUATION

Subject Ion Exchange Column H_2 Generation Evaluation

Page 1 of 2

Originator J. R. Green Date 6/12/95

Checker R. P. Genoni Date 6/12/95

I. **Objectives:**

Determination of hydrogen gas generation and pressure buildup in twelve ion exchange columns.

II. **References:**

1. GEND-041, "A Calculation Technique to Predict Combustible Gas Generation in Sealed Radioactive Waste Containers," dated May 1986.
2. WHC 1994, "Progress Report for the Enhancement of Radcalc: Isotope Database, Gamma Absorption Fractions, and $G(H_2)$ Values," WHC-SD-TP-RPT-014.

III. **Results and Conclusions:**

The results are given in Table 1.

Table 1. H_2 generation results.

Column ID #	Years Sealed	Gas Generation Rate at 10 Years (cc/hr)	Hydrogen Concentration at 10 Years	Pressure at 10 Years (psi)
BIX-5	10	9.9E-06	0.00031%	0.0
IX-1	10	3.3E-5	0.0011%	0.0
IX-2	10	2.7E-5	0.0033%	0.0
IX-3F	10	1.6E-3	0.19%	0.0
IX-3	10	2.2E-5	0.0026%	0.0
Lower 1S	10	4.3E-3	0.52%	0.0
Lower 2S	10	1.3E-3	0.16%	0.0
Lower 3S	10	8.5e-4	0.028%	0.0
Lower 4S	10	5.1e-3	0.17%	0.0
Lower 5S	10	1.7e-3	0.21%	0.0
Lower 6S	10	1.5e-3	0.061%	0.0
Lower 7S	10	7.9e-4	0.026%	0.0

ENGINEERING SAFETY EVALUATION

Subject Ion Exchange Column H_2 Generation Evaluation Page 2 of 2
Originator J. R. Green Date 6/12/95
Checker R. P. Genoni Date 6/12/95

IV. Engineering Evaluation:

The calculation technique described in Reference 1 was used to predict the radiolytic gas generation in twelve ion exchange columns. The spreadsheet provided with Reference 1 was the analytical tool used in this calculation. The methodology has been approved by the U.S. Nuclear Regulatory Commission (NRC) as a means for determining hydrogen gas generation rates.

The source term used in the spreadsheets is listed in Table 2 along with additional input values. The ion exchange columns contain mixed anion and cation resin in approximately equal amounts, and water. The $G(H_2)$ value used in the spread sheet was 0.5. The number is a conservative value based on $G(H_2)$ information contained in Reference 2.

See spreadsheet and data library attached.

Table 2. Input values used in spreadsheet.

Column ID #	Activity (Ci) ^{137}Cs	^{60}Co	$^{90}Sr/^{90}Y$	Resin Volume (ft^3)	Resin Mixture Density lb/ft^3	Void Space (ft^3)
BIX-5	1.7E-5	5.8E-4	2.7E-6	25.9	46.12	9.97
IX-1	1.3E-4	1.9E-3	2.0E-5	22.1	46.12	9.30
IX-2	4.2E-5	1.6E-3	6.8E-6	7.90	46.12	2.57
IX-3F	1.0E-2	8.8E-2	1.6E-3	7.90	46.12	2.57
IX-3	1.1E-4	1.2E-3	1.7E-5	7.90	46.12	2.57
Lower 1S	1.2E-2	2.5E-1	1.9E-3	7.90	46.12	2.57
Lower 2S	2.0E-3	7.9E-2	3.2E-4	7.90	46.12	2.57
Lower 3S	5.5E-2	9.3E-4	8.7E-3	22.1	46.12	9.30
Lower 4S	3.0E-1	3.0E-2	4.8E-2	22.1	46.12	9.30
Lower 5S	4.6E-3	1.0E-1	7.3E-4	7.90	46.12	2.57
Lower 6S	1.0E-1	1.0E-3	1.6E-2	22.1	46.12	9.30
Lower 7S*	5.2E-2	1.1E-4	8.3E-3	22.1	46.12	9.30

*Pu estimated at ≤2 pCi, input values 2.0e-12 Ci for Pu-238, Pu-239, Pu-240, Pu-241, Pu-242, and Am-241.

PROGRAM to CLASSIFY RADIOACTIVE WASTE				
CONTAINERS for TRANSPORTATION and DISPOSAL		FILE REF:	BIX-5	
CP Deltete...Analytical Resources, Inc., 2/85 & 6/90				
(Modified for DOE Radionuclides and Thermal Wattage..		DATE:	6/1/95	
RP Genoni/JG Field..Westinghouse-Hanford Co....6/88)				
		BY:	J.R. Green	J R Green 6/5/95
Originally Published by the Electric Power Research				
Institute in NP-4938 and NP-4757		CHECKED:	J.E. Mercado	J.E. Mercado 6/6/95
*** WASTE GENERAL INFORMATION ***				
Enter waste description----------	>			
" ----------	>			
" ----------	>			
Enter waste form ("Special" or "Normal")----------	>	Normal	>> Reqd input for DOT calculations	
Enter physical form ("Solid", "Liquid" or "Gas")----------	>	Liquid	>> Reqd input for DOT calculations	
Is waste Activated Metal ? ("Yes", or "No")----------	>	No	>> Reqd input for 10CFR61 calculation	
Enter container type (1=55 gal. drum, 2=4x4 liner----------	>	1	>> Reqd input for H2 calculations	
3=5x5 liner, 4=6x6 liner)				
Is container a vented HIC ? ("Yes", or "No")----------	>	No	*Note: For a vented HIC, assume	
			"Date sealed" is date shipped in Cask	
Enter date of curie calculations ----------	>	06/01/95		
Enter date last sealed*----------	>	06/01/95	>>	
Enter date to be shipped----------	>	06/01/95	>> Must be later than Ci calcs	
Enter date of shipment receipt----------	>	06/01/05		
CALCULATED Decay before sealing (years)	=	0.00	Days=	0
CALCULATED Decay before shipment (years)	=	0.00	Days=	0
CALCULATED Duration package is sealed (years)	=	10.01	Days=	3653
Enter package interior volume----------	>	35.9	Ft3	
Enter waste volume----------	>	25.9	Ft3	
CALCULATED Container void volume:		9.97	Ft3	
Enter estimated waste void volume----------	>		Ft3	
** OR **				
Enter waste true density (vendor data)----------	>	46.1	Lbs/Ft3	
CALCULATED Waste void fraction	=	0.000		
CALCULATED Waste void volume	=	0.0	Ft3	
CALCULATED Package interior volume	=	1.015E+06	cc	
CALCULATED Waste volume	=	7.331E+05	cc	
CALCULATED Total void volume	=	2.820E+05	cc	
Enter waste weight----------	>	1194	Lbs	
CALCULATED Weight	=	5.421E+05	gms	
CALCULATED Waste bulk density	=	0.7394	gms/cc	
Enter G-H2 (molecules/100 ev)----------	>	0.50		
OR				
Enter volume cation resin (cu ft)----------	>			
Enter volume anion resin (cu ft)----------	>			
Enter volume mix bed resin (cu ft)----------	>			
Enter volume other resin (cu ft)----------	>			
Enter G-H2 of other resin----------	>			
CALCULATED G-H2 for waste	=	0.00		
*** CALCULATED RESULTS ***				

H2 Generation Summary:				
Total Integrated Dose	=	1.368E+02	Rads	
H2 Volume	=	8.640E-01	cm3	
H2 Concentration	=	0.00031	%	
H2 Generation Rate	=	9.855E-06	cc/hr	
Pressure Buildup Rate	=	1.234E-08	psi/day	
Pressure (seal to ship)	=	0.00	psi	
Enter Measured H2 Concentration (if known)----------	>	0.00	%	
Ratio Measured to Calculated H2 Concentrations	=	0.00		
Activity Summary @ Shipment:				
Total Activity*	=	5.997E-04	Ci	(*Excludes Daughters
Specific Activity, Total*	=	0.000	mCi/cc	with T 1/2 < 10 days)
Specific Activity*, T 1/2 < 5 Years	==	2.562E-05	µCi/cc	
T 1/2 > 5 Years	==	8.180E-04	µCi/cc	
Decay Heat @ Shipment:				
Decay Heat @ Shipment	=	0.000	Watts	
or		0.000	BTU/hr	
Fissile Material:				
Fissile Material (49 CFR 173 & 10 CFR 71)	==	0.000	gms	
Other DOE Fissile Material (DOE 5480.1A)		0.000	gms	>> Isotope list is incomplete
Special Nuclear Material:				
Special Nuclear Material (SNM)	==	0.000	gms	
Other DOE Accountable Material (DOE 5633.3)	==	0.000	gms	>> Isotope list is incomplete
Transuranics:				
Specific Activity, Transuranics	==	0.000	nCi/gms	
10 CFR 61.55 Classification:		Unity Fraction		Classification
Table 1 Isotopes	==	0.000	A	Class A
(Long Lived)		N/A	B	
		0.000	C	Limiting Isotope
				Sr-90
Table 2 Isotopes	==	0.000	A	
(Short Lived)		0.000	B	Miscellaneous
		0.000	C	
Transportation Classification:		Unity Fraction		
LSA Determination	==	4.667E-06	LSA	
Type Determination	==	9.131E-05	Type'A'	
Highway Route Control (HRC) Determination	==	3.044E-08	Non HRC	
Limited Quantity (LQ) Determination	==	9.131E-01	Limited Quantity	
Advance Notification Quantity ?	==	No		
EPA Reportable Quantity (RQ) Determination	==	1.020E-04		

	INPUT: LISTED ISOTOPES					
	(**** = Daughter Product)				Curies when	Curies when
		Curies	or	%	Sealed	Shipped
	Total Curies					
	(ONLY if entering %) =				xxxxx	xxxxx
	H-3------>				0.000E+00	0.000E+00
	C-14------>				0.000E+00	0.000E+00
	Na-22------>				0.000E+00	0.000E+00
	Cr-51------>				0.000E+00	0.000E+00
	Mn-54------>				0.000E+00	0.000E+00
	Fe-55------>				0.000E+00	0.000E+00
	Co-57------>				0.000E+00	0.000E+00
	Co-58------>				0.000E+00	0.000E+00
	Fe-59------>				0.000E+00	0.000E+00
	Ni-59------>				0.000E+00	0.000E+00
	Co-60------>	5.800E-04			5.800E-04	5.800E-04
	Ni-63------>				0.000E+00	0.000E+00
	Zn-65------>				0.000E+00	0.000E+00
	Se-79------>				0.000E+00	0.000E+00
	Kr-85------>				0.000E+00	0.000E+00
	Sr-89------>				0.000E+00	0.000E+00
	Sr-90------>	2.700E-06			2.700E-06	2.700E-06
	Y-90------>	****		****	2.700E-06	2.700E-06
	Y-91------>				0.000E+00	0.000E+00
	Zr-93------>				0.000E+00	0.000E+00
	Nb-93m------>				0.000E+00	0.000E+00
	Nb-94------>				0.000E+00	0.000E+00
	Zr-95------>				0.000E+00	0.000E+00
	Nb-95------>				0.000E+00	0.000E+00
	Nb-95m------>				0.000E+00	0.000E+00
	Tc-99------>				0.000E+00	0.000E+00
	Ru-103------>				0.000E+00	0.000E+00
	Rh-103m------>	****		****	0.000E+00	0.000E+00
	Ru-106------>				0.000E+00	0.000E+00
	Rh-106------>	****		****	0.000E+00	0.000E+00
	Pd-107------>				0.000E+00	0.000E+00
	Cd-109------>				0.000E+00	0.000E+00
	Ag-110m------>				0.000E+00	0.000E+00
	Ag-110------>	****		****	0.000E+00	0.000E+00
	Sn-113------>				0.000E+00	0.000E+00
	In-113m------>	****		****	0.000E+00	0.000E+00
	Cd-113m------>				0.000E+00	0.000E+00
	Cd-115m------>				0.000E+00	0.000E+00
	Sn-119m------>				0.000E+00	0.000E+00
	Sn-121m------>				0.000E+00	0.000E+00
	Sn-123------>				0.000E+00	0.000E+00
	Te-123m------>				0.000E+00	0.000E+00
	Sb-124------>				0.000E+00	0.000E+00
	Sb-125------>				0.000E+00	0.000E+00
	Te-125m------>				0.000E+00	0.000E+00
	Sn-126------>				0.000E+00	0.000E+00
	Sb-126m------>	****		****	0.000E+00	0.000E+00
	Sb-126------>				0.000E+00	0.000E+00
	Te-127m------>				0.000E+00	0.000E+00
	Te-127------>	****		****	0.000E+00	0.000E+00
	Te-129m------>				0.000E+00	0.000E+00
	Te-129------>	****		****	0.000E+00	0.000E+00
	I-129------>				0.000E+00	0.000E+00
	I-131------>				0.000E+00	0.000E+00
	Cs-134------>				0.000E+00	0.000E+00
	Cs-135------>				0.000E+00	0.000E+00

	Cs-136------>				0.000E+00	0.000E+00
	Cs-137------>	1.700E-05			1.700E-05	1.700E-05
	Ba-137m----->	****		****	1.608E-05	1.608E-05
	Ba-140------>				0.000E+00	0.000E+00
	La-140------>	****		****	0.000E+00	0.000E+00
	Ce-141------>				0.000E+00	0.000E+00
	Pr-143------>				0.000E+00	0.000E+00
	Ce-144------>				0.000E+00	0.000E+00
	Pr-144------>	****		****	0.000E+00	0.000E+00
	Pr-144m------>				0.000E+00	0.000E+00
	Nd-147------>				0.000E+00	0.000E+00
	Pm-147------>				0.000E+00	0.000E+00
	Pm-148m------>				0.000E+00	0.000E+00
	Pm-148------>	****		****	0.000E+00	0.000E+00
	Sm-151------>				0.000E+00	0.000E+00
	Eu-152------>				0.000E+00	0.000E+00
	Gd-153------>				0.000E+00	0.000E+00
	Eu-154------>				0.000E+00	0.000E+00
	Eu-155------>				0.000E+00	0.000E+00
	Eu-156------>				0.000E+00	0.000E+00
	Tb-160------>				0.000E+00	0.000E+00
	Ta-182------>				0.000E+00	0.000E+00
	Ra-226------>				0.000E+00	0.000E+00
	U-233------>				0.000E+00	0.000E+00
	U-234------>				0.000E+00	0.000E+00
	U-235------>				0.000E+00	0.000E+00
	U-236------>				0.000E+00	0.000E+00
	U-237------>				0.000E+00	0.000E+00
	U-238------>				0.000E+00	0.000E+00
	Np-237------>				0.000E+00	0.000E+00
	Pu-238------>				0.000E+00	0.000E+00
	Pu-239------>				0.000E+00	0.000E+00
	Pu-240------>				0.000E+00	0.000E+00
	Pu-241------>				0.000E+00	0.000E+00
	Pu-242------>				0.000E+00	0.000E+00
	Am-241------>				0.000E+00	0.000E+00
	Am-242m------>				0.000E+00	0.000E+00
	Am-242------>	****		****	0.000E+00	0.000E+00
	Am-243------>				0.000E+00	0.000E+00
	Cm-242------>				0.000E+00	0.000E+00
	Cm-244------>				0.000E+00	0.000E+00

PROGRAM to CLASSIFY RADIOACTIVE WASTE				
CONTAINERS for TRANSPORTATION and DISPOSAL		FILE REF:	IX-1	
CP Deltete...Analytical Resources, Inc., 2/85 & 6/90				
(Modified for DOE Radionuclides and Thermal Wattage..		DATE:	6/1/95	
RP Genoni/JG Field..Westinghouse-Hanford Co....6/88)				
		BY:	J.R. Green	JR Green 6/5/95
Originally Published by the Electric Power Research			T.M. Kaufman	T.M. Kaufman 6/5/95
Institute in NP-4938 and NP-4757		CHECKED:	J.E. Mercado	J.E. Mercado 6/6/95
*** WASTE GENERAL INFORMATION ***				
Enter waste description----------	>			
" ----------	>			
" ----------	>			
Enter waste form ("Special" or "Normal")----------	>	Normal	>> Reqd input for DOT calculations	
Enter physical form ("Solid", "Liquid" or "Gas")----------	>	Liquid	>> Reqd input for DOT calculations	
Is waste Activated Metal ? ("Yes", or "No")----------	>	No	>> Reqd input for 10CFR61 calculation	
Enter container type (1=55 gal. drum, 2=4x4 liner----------	>	1	>> Reqd input for H2 calculations	
3=5x5 liner, 4=6x6 liner)				
Is container a vented HIC ? ("Yes", or "No")----------	>	No	*Note: For a vented HIC, assume	
			"Date sealed" is date shipped in Cask	
Enter date of curie calculations ----------	>	06/01/95		
Enter date last sealed*----------	>	06/01/95	>>	
Enter date to be shipped----------	>	06/01/95	>> Must be later than Ci calcs	
Enter date of shipment receipt----------	>	06/01/05		
CALCULATED Decay before sealing (years)	=	0.00	Days=	0
CALCULATED Decay before shipment (years)	=	0.00	Days=	0
CALCULATED Duration package is sealed (years)	=	10.01	Days=	3653
Enter package interior volume----------	>	31.4	Ft3	
Enter waste volume----------	>	22.1	Ft3	
CALCULATED Container void volume:		9.30	Ft3	
Enter estimated waste void volume----------	>		Ft3	
** OR **				
Enter waste true density (vendor data)----------	>	46.1	Lbs/Ft3	
CALCULATED Waste void fraction	=	-0.001		
CALCULATED Waste void volume	=	0.0	Ft3	
CALCULATED Package interior volume	=	8.892E+05	cc	
CALCULATED Waste volume	=	6.258E+05	cc	
CALCULATED Total void volume	=	2.626E+05	cc	
Enter waste weight----------	>	1020	Lbs	
CALCULATED Weight	=	4.631E+05	gms	
CALCULATED Waste bulk density	=	0.7400	gms/cc	
Enter G-H2 (molecules/100 ev)----------	>	0.50		
OR				
Enter volume cation resin (cu ft)----------	>			
Enter volume anion resin (cu ft)----------	>			
Enter volume mix bed resin (cu ft)----------	>			
Enter volume other resin (cu ft)----------	>			
Enter G-H2 of other resin----------	>			
CALCULATED G-H2 for waste	=	0.00		
*** CALCULATED RESULTS ***				

H2 Generation Summary:				
Total Integrated Dose	=	5.430E+02	Rads	
H2 Volume	=	2.929E+00	cm3	
H2 Concentration	=	0.00112	%	
H2 Generation Rate	=	3.341E-05	cc/hr	
Pressure Buildup Rate	=	4.491E-08	psi/day	
Pressure (seal to ship)	=	0.00	psi	
Enter Measured H2 Concentration (if known)----------	>	0.00	%	
Ratio Measured to Calculated H2 Concentrations	=	0.00		
Activity Summary @ Shipment:				
Total Activity*	=	2.050E-03	Ci	(*Excludes Daughters
Specific Activity, Total*	=	0.000	mCi/cc	with T 1/2 < 10 days)
Specific Activity*, T 1/2 < 5 Years	==	2.285E-04	µCi/cc	
T 1/2 > 5 Years	==	3.276E-03	µCi/cc	
Decay Heat @ Shipment:				
Decay Heat @ Shipment	=	0.000	Watts	
or		0.000	BTU/hr	
Fissile Material:				
Fissile Material (49 CFR 173 & 10 CFR 71)	==	0.000	gms	
Other DOE Fissile Material (DOE 5480.1A)		0.000	gms	>> Isotope list is incomplete
Special Nuclear Material:				
Special Nuclear Material (SNM)	==	0.000	gms	
Other DOE Accountable Material (DOE 5633.3)	==	0.000	gms	>> Isotope list is incomplete
Transuranics:				
Specific Activity, Transuranics	==	0.000	nCi/gms	
10 CFR 61.55 Classification:		Unity Fraction		Classification
Table 1 Isotopes	==	0.000	A	Class A
(Long Lived)		N/A	B	
		0.000	C	Limiting Isotope
				Sr-90
Table 2 Isotopes	==	0.001	A	
(Short Lived)		0.000	B	Miscellaneous
		0.000	C	
Transportation Classification:		Unity Fraction		
LSA Determination	==	2.325E-05	LSA	
Type Determination	==	3.344E-04	Type'A'	
Highway Route Control (HRC) Determination	==	1.115E-07	Non HRC	
Limited Quantity (LQ) Determination	==	3.344E+00	> LQ	
Advance Notification Quantity ?	==	No		
EPA Reportable Quantity (RQ) Determination	==	5.200E-04		

	INPUT: LISTED ISOTOPES					
	(**** = Daughter Product)				Curies when	Curies when
		Curies	or	%	Sealed	Shipped
	Total Curies					
	(ONLY if entering %) =				xxxxx	xxxxx
	H-3------>				0.000E+00	0.000E+00
	C-14------>				0.000E+00	0.000E+00
	Na-22------>				0.000E+00	0.000E+00
	Cr-51------>				0.000E+00	0.000E+00
	Mn-54------>				0.000E+00	0.000E+00
	Fe-55------>				0.000E+00	0.000E+00
	Co-57------>				0.000E+00	0.000E+00
	Co-58------>				0.000E+00	0.000E+00
	Fe-59------>				0.000E+00	0.000E+00
	Ni-59------>				0.000E+00	0.000E+00
	Co-60------>	1.900E-03			1.900E-03	1.900E-03
	Ni-63------>				0.000E+00	0.000E+00
	Zn-65------>				0.000E+00	0.000E+00
	Se-79------>				0.000E+00	0.000E+00
	Kr-85------>				0.000E+00	0.000E+00
	Sr-89------>				0.000E+00	0.000E+00
	Sr-90------>	2.000E-05			2.000E-05	2.000E-05
	Y-90------>	****		****	2.000E-05	2.000E-05
	Y-91------>				0.000E+00	0.000E+00
	Zr-93------>				0.000E+00	0.000E+00
	Nb-93m------>				0.000E+00	0.000E+00
	Nb-94------>				0.000E+00	0.000E+00
	Zr-95------>				0.000E+00	0.000E+00
	Nb-95------>				0.000E+00	0.000E+00
	Nb-95m------>				0.000E+00	0.000E+00
	Tc-99------>				0.000E+00	0.000E+00
	Ru-103------>				0.000E+00	0.000E+00
	Rh-103m------>	****		****	0.000E+00	0.000E+00
	Ru-106------>				0.000E+00	0.000E+00
	Rh-106------>	****		****	0.000E+00	0.000E+00
	Pd-107------>				0.000E+00	0.000E+00
	Cd-109------>				0.000E+00	0.000E+00
	Ag-110m------>				0.000E+00	0.000E+00
	Ag-110------>	****		****	0.000E+00	0.000E+00
	Sn-113------>				0.000E+00	0.000E+00
	In-113m------>	****		****	0.000E+00	0.000E+00
	Cd-113m------>				0.000E+00	0.000E+00
	Cd-115m------>				0.000E+00	0.000E+00
	Sn-119m------>				0.000E+00	0.000E+00
	Sn-121m------>				0.000E+00	0.000E+00
	Sn-123------>				0.000E+00	0.000E+00
	Te-123m------>				0.000E+00	0.000E+00
	Sb-124------>				0.000E+00	0.000E+00
	Sb-125------>				0.000E+00	0.000E+00
	Te-125m------>				0.000E+00	0.000E+00
	Sn-126------>				0.000E+00	0.000E+00
	Sb-126m------>	****		****	0.000E+00	0.000E+00
	Sb-126------>				0.000E+00	0.000E+00
	Te-127m------>				0.000E+00	0.000E+00
	Te-127------>	****		****	0.000E+00	0.000E+00
	Te-129m------>				0.000E+00	0.000E+00
	Te-129------>	****		****	0.000E+00	0.000E+00
	I-129------>				0.000E+00	0.000E+00
	I-131------>				0.000E+00	0.000E+00
	Cs-134------>				0.000E+00	0.000E+00
	Cs-135------>				0.000E+00	0.000E+00

	Cs-136------>				0.000E+00	0.000E+00
	Cs-137------>	1.300E-04			1.300E-04	1.300E-04
	Ba-137m----->	****		****	1.230E-04	1.230E-04
	Ba-140------>				0.000E+00	0.000E+00
	La-140------>	****		****	0.000E+00	0.000E+00
	Ce-141------>				0.000E+00	0.000E+00
	Pr-143------>				0.000E+00	0.000E+00
	Ce-144------>				0.000E+00	0.000E+00
	Pr-144------>	****		****	0.000E+00	0.000E+00
	Pr-144m----->				0.000E+00	0.000E+00
	Nd-147------>				0.000E+00	0.000E+00
	Pm-147------>				0.000E+00	0.000E+00
	Pm-148m----->				0.000E+00	0.000E+00
	Pm-148------>	****		****	0.000E+00	0.000E+00
	Sm-151------>				0.000E+00	0.000E+00
	Eu-152------>				0.000E+00	0.000E+00
	Gd-153------>				0.000E+00	0.000E+00
	Eu-154------>				0.000E+00	0.000E+00
	Eu-155------>				0.000E+00	0.000E+00
	Eu-156------>				0.000E+00	0.000E+00
	Tb-160------>				0.000E+00	0.000E+00
	Ta-182------>				0.000E+00	0.000E+00
	Ra-226------>				0.000E+00	0.000E+00
	U-233------>				0.000E+00	0.000E+00
	U-234------>				0.000E+00	0.000E+00
	U-235------>				0.000E+00	0.000E+00
	U-236------>				0.000E+00	0.000E+00
	U-237------>				0.000E+00	0.000E+00
	U-238------>				0.000E+00	0.000E+00
	Np-237------>				0.000E+00	0.000E+00
	Pu-238------>				0.000E+00	0.000E+00
	Pu-239------>				0.000E+00	0.000E+00
	Pu-240------>				0.000E+00	0.000E+00
	Pu-241------>				0.000E+00	0.000E+00
	Pu-242------>				0.000E+00	0.000E+00
	Am-241------>				0.000E+00	0.000E+00
	Am-242m----->				0.000E+00	0.000E+00
	Am-242------>	****		****	0.000E+00	0.000E+00
	Am-243------>				0.000E+00	0.000E+00
	Cm-242------>				0.000E+00	0.000E+00
	Cm-244------>				0.000E+00	0.000E+00

PROGRAM to CLASSIFY RADIOACTIVE WASTE				
CONTAINERS for TRANSPORTATION and DISPOSAL		FILE REF:	IX-2	
CP Delitete...Analytical Resources, Inc., 2/85 & 6/90				
(Modified for DOE Radionuclides and Thermal Wattage..		DATE:	6/1/95	
RP Genoni/JG Field..Westinghouse-Hanford Co....6/88)				
		BY:	J.R. Green	J.R. Green 6/5/95
Originally Published by the Electric Power Research			T.M. Kaufman	T.M. Kaufman 6/5/95
Institute in NP-4938 and NP-4757		CHECKED:	J.E. Mercado	J.E. Mercado 6/6/95
*** WASTE GENERAL INFORMATION ***				
Enter waste description----------	>			
" ----------	>			
" ----------	>			
Enter waste form ("Special" or "Normal")----------	>	Normal	>> Reqd input for DOT calculations	
Enter physical form ("Solid", "Liquid" or "Gas")----------	>	Liquid	>> Reqd input for DOT calculations	
Is waste Activated Metal ? ("Yes", or "No")----------	>	No	>> Reqd input for 10CFR61 calculation	
Enter container type (1=55 gal. drum, 2=4x4 liner----------	>	1	>> Reqd input for H2 calculations	
3=5x5 liner, 4=6x6 liner)				
Is container a vented HIC ? ("Yes", or "No")----------	>	No	*Note: For a vented HIC, assume	
			"Date sealed" is date shipped in Cask	
Enter date of curie calculations ----------	>	06/01/95		
Enter date last sealed*----------	>	06/01/95	>>	
Enter date to be shipped----------	>	06/01/95	>> Must be later than Ci calcs	
Enter date of shipment receipt----------	>	06/01/05		
CALCULATED Decay before sealing (years)	=	0.00	Days=	0
CALCULATED Decay before shipment (years)	=	0.00	Days=	0
CALCULATED Duration package is sealed (years)	=	10.01	Days=	3653
Enter package interior volume----------	>	10.5	Ft3	
Enter waste volume----------	>	7.9	Ft3	
CALCULATED Container void volume:		2.57	Ft3	
Enter estimated waste void volume----------	>		Ft3	
** OR **				
Enter waste true density (vendor data)----------	>	46.1	Lbs/Ft3	
CALCULATED Waste void fraction	=	-0.002		
CALCULATED Waste void volume	=	0.0	Ft3	
CALCULATED Package interior volume	=	2.965E+05	cc	
CALCULATED Waste volume	=	2.237E+05	cc	
CALCULATED Total void volume	=	7.227E+04	cc	
Enter waste weight----------	>	365	Lbs	
CALCULATED Weight	=	1.657E+05	gms	
CALCULATED Waste bulk density	=	0.7408	gms/cc	
Enter G-H2 (molecules/100 ev)----------	>	0.50		
OR				
Enter volume cation resin (cu ft)----------	>			
Enter volume anion resin (cu ft)----------	>			
Enter volume mix bed resin (cu ft)----------	>			
Enter volume other resin (cu ft)----------	>			
Enter G-H2 of other resin----------	>			
CALCULATED G-H2 for waste	=	0.00		
*** CALCULATED RESULTS ***				

H2 Generation Summary:				
Total Integrated Dose	=	1.233E+03	Rads	
H2 Volume	=	2.380E+00	cm3	
H2 Concentration	=	0.00329	%	
H2 Generation Rate	=	2.715E-05	cc/hr	
Pressure Buildup Rate	=	1.326E-07	psi/day	
Pressure (seal to ship)	=	0.00	psi	
Enter Measured H2 Concentration (if known)----------	>	0.00	%	
Ratio Measured to Calculated H2 Concentrations	=	0.00		
Activity Summary @ Shipment:				
Total Activity*	=	1.649E-03	Ci	(*Excludes Daughters
Specific Activity, Total*	=	0.000	mCi/cc	with T 1/2 < 10 days)
Specific Activity*, T 1/2 < 5 Years	==	2.080E-04	µCi/cc	
T 1/2 > 5 Years	==	7.370E-03	µCi/cc	
Decay Heat @ Shipment:				
Decay Heat @ Shipment	=	0.000	Watts	
or		0.000	BTU/hr	
Fissile Material:				
Fissile Material (49 CFR 173 & 10 CFR 71)	==	0.000	gms	
Other DOE Fissile Material (DOE 5480.1A)		0.000	gms	>> Isotope list is incomplete
Special Nuclear Material:				
Special Nuclear Material (SNM)	==	0.000	gms	
Other DOE Accountable Material (DOE 5633.3)	==	0.000	gms	>> Isotope list is incomplete
Transuranics:				
Specific Activity, Transuranics	==	0.000	nCi/gms	
10 CFR 61.55 Classification:		Unity Fraction		Classification
Table 1 Isotopes	==	0.000	A	Class A
(Long Lived)		N/A	B	
		0.000	C	Limiting Isotope
				Sr-90
Table 2 Isotopes	==	0.001	A	
(Short Lived)		0.000	B	Miscellaneous
		0.000	C	
Transportation Classification:		Unity Fraction		
LSA Determination	==	4.124E-05	LSA	
Type Determination	==	2.498E-04	Type'A'	
Highway Route Control (HRC) Determination	==	8.326E-08	Non HRC	
Limited Quantity (LQ) Determination	==	2.498E+00	> LQ	
Advance Notification Quantity ?	==	No		
EPA Reportable Quantity (RQ) Determination	==	2.700E-04		

	INPUT: LISTED ISOTOPES				
	(**** = Daughter Product)			Curies when	Curies when
		Curies	or	%	Sealed	Shipped
	Total Curies				
	(ONLY if entering %) =				
	H-3------>			xxxxx	xxxxx
	C-14------>			0.000E+00	0.000E+00
	Na-22------>			0.000E+00	0.000E+00
	Cr-51------>			0.000E+00	0.000E+00
	Mn-54------>			0.000E+00	0.000E+00
	Fe-55------>			0.000E+00	0.000E+00
	Co-57------>			0.000E+00	0.000E+00
	Co-58------>			0.000E+00	0.000E+00
	Fe-59------>			0.000E+00	0.000E+00
	Ni-59------>			0.000E+00	0.000E+00
	Co-60------>	1.600E-03		0.000E+00	0.000E+00
	Ni-63------>			1.600E-03	1.600E-03
	Zn-65------>			0.000E+00	0.000E+00
	Se-79------>			0.000E+00	0.000E+00
	Kr-85------>			0.000E+00	0.000E+00
	Sr-89------>			0.000E+00	0.000E+00
	Sr-90------>	6.800E-06		0.000E+00	0.000E+00
	Y-90------>	****		6.800E-06	6.800E-06
	Y-91------>			****	6.800E-06
	Zr-93------>			0.000E+00	0.000E+00
	Nb-93m------>			0.000E+00	0.000E+00
	Nb-94------>			0.000E+00	0.000E+00
	Zr-95------>			0.000E+00	0.000E+00
	Nb-95------>			0.000E+00	0.000E+00
	Nb-95m------>			0.000E+00	0.000E+00
	Tc-99------>			0.000E+00	0.000E+00
	Ru-103------>			0.000E+00	0.000E+00
	Rh-103m----->	****		0.000E+00	0.000E+00
	Ru-106------>			****	0.000E+00
	Rh-106------>	****		0.000E+00	0.000E+00
	Pd-107------>			****	0.000E+00
	Cd-109------>			0.000E+00	0.000E+00
	Ag-110m------>			0.000E+00	0.000E+00
	Ag-110------>	****		0.000E+00	0.000E+00
	Sn-113------>			****	0.000E+00
	In-113m----->	****		0.000E+00	0.000E+00
	Cd-113m----->			****	0.000E+00
	Cd-115m----->			0.000E+00	0.000E+00
	Sn-119m------>			0.000E+00	0.000E+00
	Sn-121m------>			0.000E+00	0.000E+00
	Sn-123------>			0.000E+00	0.000E+00
	Te-123m------>			0.000E+00	0.000E+00
	Sb-124------>			0.000E+00	0.000E+00
	Sb-125------>			0.000E+00	0.000E+00
	Te-125m----->			0.000E+00	0.000E+00
	Sn-126------>			0.000E+00	0.000E+00
	Sb-126m----->	****		0.000E+00	0.000E+00
	Sb-126------>			****	0.000E+00
	Te-127m----->			0.000E+00	0.000E+00
	Te-127------>	****		0.000E+00	0.000E+00
	Te-129m----->			****	0.000E+00
	Te-129------>	****		0.000E+00	0.000E+00
	I-129------>			****	0.000E+00
	I-131------>			0.000E+00	0.000E+00
	Cs-134------>			0.000E+00	0.000E+00
	Cs-135------>			0.000E+00	0.000E+00

	Cs-136----->				0.000E+00	0.000E+00
	Cs-137----->	4.200E-05			4.200E-05	4.200E-05
	Ba-137m----->	****		****	3.973E-05	3.973E-05
	Ba-140----->				0.000E+00	0.000E+00
	La-140----->	****		****	0.000E+00	0.000E+00
	Ce-141----->				0.000E+00	0.000E+00
	Pr-143----->				0.000E+00	0.000E+00
	Ce-144----->				0.000E+00	0.000E+00
	Pr-144----->	****		****	0.000E+00	0.000E+00
	Pr-144m----->				0.000E+00	0.000E+00
	Nd-147----->				0.000E+00	0.000E+00
	Pm-147----->				0.000E+00	0.000E+00
	Pm-148m----->				0.000E+00	0.000E+00
	Pm-148----->	****		****	0.000E+00	0.000E+00
	Sm-151----->				0.000E+00	0.000E+00
	Eu-152----->				0.000E+00	0.000E+00
	Gd-153----->				0.000E+00	0.000E+00
	Eu-154----->				0.000E+00	0.000E+00
	Eu-155----->				0.000E+00	0.000E+00
	Eu-156----->				0.000E+00	0.000E+00
	Tb-160----->				0.000E+00	0.000E+00
	Ta-182----->				0.000E+00	0.000E+00
	Ra-226----->				0.000E+00	0.000E+00
	U-233----->				0.000E+00	0.000E+00
	U-234----->				0.000E+00	0.000E+00
	U-235----->				0.000E+00	0.000E+00
	U-236----->				0.000E+00	0.000E+00
	U-237----->				0.000E+00	0.000E+00
	U-238----->				0.000E+00	0.000E+00
	Np-237----->				0.000E+00	0.000E+00
	Pu-238----->				0.000E+00	0.000E+00
	Pu-239----->				0.000E+00	0.000E+00
	Pu-240----->				0.000E+00	0.000E+00
	Pu-241----->				0.000E+00	0.000E+00
	Pu-242----->				0.000E+00	0.000E+00
	Am-241----->				0.000E+00	0.000E+00
	Am-242m----->				0.000E+00	0.000E+00
	Am-242----->	****		****	0.000E+00	0.000E+00
	Am-243----->				0.000E+00	0.000E+00
	Cm-242----->				0.000E+00	0.000E+00
	Cm-244----->				0.000E+00	0.000E+00

PROGRAM to CLASSIFY RADIOACTIVE WASTE				
CONTAINERS for TRANSPORTATION and DISPOSAL		FILE REF:	IX-3F	
CP Deltete...Analytical Resources, Inc., 2/85 & 6/90				
(Modified for DOE Radionuclides and Thermal Wattage..		DATE:	6/1/95	
RP Genoni/JG Field..Westinghouse-Hanford Co....6/88)				
		BY:	J.R. Green	J.R. Green 6/5/95
Originally Published by the Electric Power Research			T.M. Kaufman	T.M. Kaufman 6/5/95
Institute in NP-4938 and NP-4757		CHECKED:	J.E. Mercado	J.E. Mercado 6/6/95
*** WASTE GENERAL INFORMATION ***				
Enter waste description----------	>			
" ----------	>			
" ----------	>			
Enter waste form ("Special" or "Normal")----------	>	Normal	>> Reqd input for DOT calculations	
Enter physical form ("Solid", "Liquid" or "Gas")----------	>	Liquid	>> Reqd input for DOT calculations	
Is waste Activated Metal ? ("Yes", or "No")----------	>	No	>> Reqd input for 10CFR61 calculation	
Enter container type (1=55 gal. drum, 2=4x4 liner----------	>	1	>> Reqd input for H2 calculations	
3=5x5 liner, 4=6x6 liner)				
Is container a vented HIC ? ("Yes", or "No")----------	>	No	*Note: For a vented HIC, assume	
			"Date sealed" is date shipped in Cask	
Enter date of curie calculations ----------	>	06/01/95		
Enter date last sealed*----------	>	06/01/95	>>	
Enter date to be shipped----------	>	06/01/95	>> Must be later than Ci calcs	
Enter date of shipment receipt----------	>	06/01/05		
CALCULATED Decay before sealing (years)	=	0.00	Days=	0
CALCULATED Decay before shipment (years)	=	0.00	Days=	0
CALCULATED Duration package is sealed (years)	=	10.01	Days=	3653
Enter package interior volume----------	>	10.5	Ft3	
Enter waste volume----------	>	7.9	Ft3	
CALCULATED Container void volume:		2.57	Ft3	
Enter estimated waste void volume----------	>		Ft3	
** OR **				
Enter waste true density (vendor data)----------	>	46.1	Lbs/Ft3	
CALCULATED Waste void fraction	=	-0.002		
CALCULATED Waste void volume	=	0.0	Ft3	
CALCULATED Package interior volume	=	2.965E+05	cc	
CALCULATED Waste volume	=	2.237E+05	cc	
CALCULATED Total void volume	=	7.227E+04	cc	
Enter waste weight----------	>	365	Lbs	
CALCULATED Weight	=	1.657E+05	gms	
CALCULATED Waste bulk density	=	0.7408	gms/cc	
Enter G-H2 (molecules/100 ev)----------	>	0.50		
OR				
Enter volume cation resin (cu ft)----------	>			
Enter volume anion resin (cu ft)----------	>			
Enter volume mix bed resin (cu ft)----------	>			
Enter volume other resin (cu ft)----------	>			
Enter G-H2 of other resin----------	>			
CALCULATED G-H2 for waste	=	0.00		
*** CALCULATED RESULTS ***				

H2 Generation Summary:				
Total Integrated Dose	=	7.312E+04	Rads	
H2 Volume	=	1.412E+02	cm3	
H2 Concentration	=	0.19492	%	
H2 Generation Rate	=	1.610E-03	cc/hr	
Pressure Buildup Rate	=	7.864E-06	psi/day	
Pressure (seal to ship)	=	0.00	psi	
Enter Measured H2 Concentration (if known)----------	>	0.00	%	
Ratio Measured to Calculated H2 Concentrations	=	0.00		
Activity Summary @ Shipment:				
Total Activity*	=	9.960E-02	Ci	(*Excludes Daughters
Specific Activity, Total*	=	0.000	mCi/cc	with T 1/2 < 10 days)
Specific Activity*, T 1/2 < 5 Years	==	4.944E-02	µCi/cc	
T 1/2 > 5 Years	==	4.452E-01	µCi/cc	
Decay Heat @ Shipment:				
Decay Heat @ Shipment	=	0.001	Watts	
or		0.005	BTU/hr	
Fissile Material:				
Fissile Material (49 CFR 173 & 10 CFR 71)	==	0.000	gms	
Other DOE Fissile Material (DOE 5480.1A)		0.000	gms	>> Isotope list is incomplete
Special Nuclear Material:				
Special Nuclear Material (SNM)	==	0.000	gms	
Other DOE Accountable Material (DOE 5633.3)	==	0.000	gms	>> Isotope list is incomplete
Transuranics:				
Specific Activity, Transuranics	==	0.000	nCi/gms	
10 CFR 61.55 Classification:		Unity Fraction		Classification
Table 1 Isotopes	==	0.000	A	Class A
(Long Lived)		N/A	B	
		0.000	C	Limiting Isotope
				Sr-90
Table 2 Isotopes	==	0.224	A	
(Short Lived)		0.001	B	Miscellaneous
		0.000	C	
Transportation Classification:		Unity Fraction		
LSA Determination	==	3.902E-03	LSA	
Type Determination	==	1.757E-02	Type'A'	
Highway Route Control (HRC) Determination	==	5.857E-06	Non HRC	
Limited Quantity (LQ) Determination	==	1.757E+02	> LQ	
Advance Notification Quantity ?	==	No		
EPA Reportable Quantity (RQ) Determination	==	3.480E-02		

	INPUT: LISTED ISOTOPES					
	(**** = Daughter Product)				Curies when	Curies when
		Curies	or	%	Sealed	Shipped
	Total Curies					
	(ONLY if entering %) =				xxxxx	xxxxx
	H-3------>				0.000E+00	0.000E+00
	C-14------>				0.000E+00	0.000E+00
	Na-22------>				0.000E+00	0.000E+00
	Cr-51------>				0.000E+00	0.000E+00
	Mn-54------>				0.000E+00	0.000E+00
	Fe-55------>				0.000E+00	0.000E+00
	Co-57------>				0.000E+00	0.000E+00
	Co-58------>				0.000E+00	0.000E+00
	Fe-59------>				0.000E+00	0.000E+00
	Ni-59------>				0.000E+00	0.000E+00
	Co-60------>	8.800E-02			8.800E-02	8.800E-02
	Ni-63------>				0.000E+00	0.000E+00
	Zn-65------>				0.000E+00	0.000E+00
	Se-79------>				0.000E+00	0.000E+00
	Kr-85------>				0.000E+00	0.000E+00
	Sr-89------>				0.000E+00	0.000E+00
	Sr-90------>	1.600E-03			1.600E-03	1.600E-03
	Y-90------>	****		****	1.600E-03	1.600E-03
	Y-91------>				0.000E+00	0.000E+00
	Zr-93------>				0.000E+00	0.000E+00
	Nb-93m------>				0.000E+00	0.000E+00
	Nb-94------>				0.000E+00	0.000E+00
	Zr-95------>				0.000E+00	0.000E+00
	Nb-95------>				0.000E+00	0.000E+00
	Nb-95m------>				0.000E+00	0.000E+00
	Tc-99------>				0.000E+00	0.000E+00
	Ru-103------>				0.000E+00	0.000E+00
	Rh-103m------>	****		****	0.000E+00	0.000E+00
	Ru-106------>				0.000E+00	0.000E+00
	Rh-106------>	****		****	0.000E+00	0.000E+00
	Pd-107------>				0.000E+00	0.000E+00
	Cd-109------>				0.000E+00	0.000E+00
	Ag-110m------>				0.000E+00	0.000E+00
	Ag-110------>	****		****	0.000E+00	0.000E+00
	Sn-113------>				0.000E+00	0.000E+00
	In-113m------>	****		****	0.000E+00	0.000E+00
	Cd-113m------>				0.000E+00	0.000E+00
	Cd-115m------>				0.000E+00	0.000E+00
	Sn-119m------>				0.000E+00	0.000E+00
	Sn-121m------>				0.000E+00	0.000E+00
	Sn-123------>				0.000E+00	0.000E+00
	Te-123m------>				0.000E+00	0.000E+00
	Sb-124------>				0.000E+00	0.000E+00
	Sb-125------>				0.000E+00	0.000E+00
	Te-125m------>				0.000E+00	0.000E+00
	Sn-126------>				0.000E+00	0.000E+00
	Sb-126m------>	****		****	0.000E+00	0.000E+00
	Sb-126------>				0.000E+00	0.000E+00
	Te-127m------>				0.000E+00	0.000E+00
	Te-127------>	****		****	0.000E+00	0.000E+00
	Te-129m------>				0.000E+00	0.000E+00
	Te-129------>	****		****	0.000E+00	0.000E+00
	I-129------>				0.000E+00	0.000E+00
	I-131------>				0.000E+00	0.000E+00
	Cs-134------>				0.000E+00	0.000E+00
	Cs-135------>				0.000E+00	0.000E+00

	Cs-136------>				0.000E+00	0.000E+00
	Cs-137------>	1.000E-02			1.000E-02	1.000E-02
	Ba-137m----->	****		****	9.460E-03	9.460E-03
	Ba-140------>				0.000E+00	0.000E+00
	La-140------>	****		****	0.000E+00	0.000E+00
	Ce-141------>				0.000E+00	0.000E+00
	Pr-143------>				0.000E+00	0.000E+00
	Ce-144------>				0.000E+00	0.000E+00
	Pr-144------>	****		****	0.000E+00	0.000E+00
	Pr-144m----->				0.000E+00	0.000E+00
	Nd-147------>				0.000E+00	0.000E+00
	Pm-147------>				0.000E+00	0.000E+00
	Pm-148m----->				0.000E+00	0.000E+00
	Pm-148------>	****		****	0.000E+00	0.000E+00
	Sm-151------>				0.000E+00	0.000E+00
	Eu-152------>				0.000E+00	0.000E+00
	Gd-153------>				0.000E+00	0.000E+00
	Eu-154------>				0.000E+00	0.000E+00
	Eu-155------>				0.000E+00	0.000E+00
	Eu-156------>				0.000E+00	0.000E+00
	Tb-160------>				0.000E+00	0.000E+00
	Ta-182------>				0.000E+00	0.000E+00
	Ra-226------>				0.000E+00	0.000E+00
	U-233------>				0.000E+00	0.000E+00
	U-234------>				0.000E+00	0.000E+00
	U-235------>				0.000E+00	0.000E+00
	U-236------>				0.000E+00	0.000E+00
	U-237------>				0.000E+00	0.000E+00
	U-238------>				0.000E+00	0.000E+00
	Np-237------>				0.000E+00	0.000E+00
	Pu-238------>				0.000E+00	0.000E+00
	Pu-239------>				0.000E+00	0.000E+00
	Pu-240------>				0.000E+00	0.000E+00
	Pu-241------>				0.000E+00	0.000E+00
	Pu-242------>				0.000E+00	0.000E+00
	Am-241------>				0.000E+00	0.000E+00
	Am-242m----->				0.000E+00	0.000E+00
	Am-242------>	****		****	0.000E+00	0.000E+00
	Am-243------>				0.000E+00	0.000E+00
	Cm-242------>				0.000E+00	0.000E+00
	Cm-244------>				0.000E+00	0.000E+00

PROGRAM to CLASSIFY RADIOACTIVE WASTE				
CONTAINERS for TRANSPORTATION and DISPOSAL		FILE REF:	IX-3	
CP Deltete...Analytical Resources, Inc., 2/85 & 6/90				
(Modified for DOE Radionuclides and Thermal Wattage..		DATE:	6/1/95	
RP Genoni/JG Field..Westinghouse-Hanford Co....6/88)				
		BY:	J.R. Green	J R Green 6/5/95
Originally Published by the Electric Power Research			T.M. Kaufman	T.M. Kaufman 6/5/95
Institute in NP-4938 and NP-4757		CHECKED:	J.E. Mercado	J.E. Mercado 6/6/95
*** WASTE GENERAL INFORMATION ***				
Enter waste description----------	>			
" ----------	>			
" ----------	>			
Enter waste form ("Special" or "Normal")----------	>	Normal	>> Reqd input for DOT calculations	
Enter physical form ("Solid", "Liquid" or "Gas")----------	>	Liquid	>> Reqd input for DOT calculations	
Is waste Activated Metal ? ("Yes", or "No")----------	>	No	>> Reqd input for 10CFR61 calculation	
Enter container type (1=55 gal. drum, 2=4x4 liner----------	>	1	>> Reqd input for H2 calculations	
3=5x5 liner, 4=6x6 liner)				
Is container a vented HIC ? ("Yes", or "No")----------	>	No	*Note: For a vented HIC, assume	
			"Date sealed" is date shipped in Cask	
Enter date of curie calculations ----------	>	06/01/95		
Enter date last sealed*----------	>	06/01/95	>>	
Enter date to be shipped----------	>	06/01/95	>> Must be later than Ci calcs	
Enter date of shipment receipt----------	>	06/01/05		
CALCULATED Decay before sealing (years)	=	0.00	Days=	0
CALCULATED Decay before shipment (years)	=	0.00	Days=	0
CALCULATED Duration package is sealed (years)	=	10.01	Days=	3653
Enter package interior volume----------	>	10.5	Ft3	
Enter waste volume----------	>	7.9	Ft3	
CALCULATED Container void volume:		2.57	Ft3	
Enter estimated waste void volume----------	>		Ft3	
** OR **				
Enter waste true density (vendor data)----------	>	46.1	Lbs/Ft3	
CALCULATED Waste void fraction	=	-0.002		
CALCULATED Waste void volume	=	0.0	Ft3	
CALCULATED Package interior volume	=	2.965E+05	cc	
CALCULATED Waste volume	=	2.237E+05	cc	
CALCULATED Total void volume	=	7.227E+04	cc	
Enter waste weight----------	>	365	Lbs	
CALCULATED Weight	=	1.657E+05	gms	
CALCULATED Waste bulk density	=	0.7408	gms/cc	
Enter G-H2 (molecules/100 ev)----------	>	0.50		
OR				
Enter volume cation resin (cu ft)----------	>			
Enter volume anion resin (cu ft)----------	>			
Enter volume mix bed resin (cu ft)----------	>			
Enter volume other resin (cu ft)----------	>			
Enter G-H2 of other resin----------	>			
CALCULATED G-H2 for waste	=	0.00		
*** CALCULATED RESULTS ***				

H2 Generation Summary:				
Total Integrated Dose	=	9.782E+02	Rads	
H2 Volume	=	1.888E+00	cm3	
H2 Concentration	=	0.00261	%	
H2 Generation Rate	=	2.154E-05	cc/hr	
Pressure Buildup Rate	=	1.052E-07	psi/day	
Pressure (seal to ship)	=	0.00	psi	
Enter Measured H2 Concentration (if known)----------	>	0.00	%	
Ratio Measured to Calculated H2 Concentrations	=	0.00		
Activity Summary @ Shipment:				
Total Activity*	=	1.327E-03	Ci	(*Excludes Daughters
Specific Activity, Total*	=	0.000	mCi/cc	with T 1/2 < 10 days)
Specific Activity*, T 1/2 < 5 Years	==	5.412E-04	µCi/cc	
T 1/2 > 5 Years	==	5.932E-03	µCi/cc	
Decay Heat @ Shipment:				
Decay Heat @ Shipment	=	0.000	Watts	
or		0.000	BTU/hr	
Fissile Material:				
Fissile Material (49 CFR 173 & 10 CFR 71)	==	0.000	gms	
Other DOE Fissile Material (DOE 5480.1A)		0.000	gms	>> Isotope list is incomplete
Special Nuclear Material:				
Special Nuclear Material (SNM)	==	0.000	gms	
Other DOE Accountable Material (DOE 5633.3)	==	0.000	gms	>> Isotope list is incomplete
Transuranics:				
Specific Activity, Transuranics	==	0.000	nCi/gms	
10 CFR 61.55 Classification:		Unity Fraction		Classification
Table 1 Isotopes	==	0.000	A	Class A
(Long Lived)		N/A	B	
		0.000	C	Limiting Isotope
				Sr-90
Table 2 Isotopes	==	0.002	A	
(Short Lived)		0.000	B	Miscellaneous
		0.000	C	
Transportation Classification:		Unity Fraction		
LSA Determination	==	4.687E-05	LSA	
Type Determination	==	2.249E-04	Type'A'	
Highway Route Control (HRC) Determination	==	7.498E-08	Non HRC	
Limited Quantity (LQ) Determination	==	2.249E+00	> LQ	
Advance Notification Quantity ?	==	No		
EPA Reportable Quantity (RQ) Determination	==	4.000E-04		

	INPUT: LISTED ISOTOPES					
	(**** = Daughter Product)				Curies when	Curies when
		Curies	or	%	Sealed	Shipped
	Total Curies					
	(ONLY if entering %) =				xxxxx	xxxxx
	H-3------>				0.000E+00	0.000E+00
	C-14------>				0.000E+00	0.000E+00
	Na-22------>				0.000E+00	0.000E+00
	Cr-51------>				0.000E+00	0.000E+00
	Mn-54------>				0.000E+00	0.000E+00
	Fe-55------>				0.000E+00	0.000E+00
	Co-57------>				0.000E+00	0.000E+00
	Co-58------>				0.000E+00	0.000E+00
	Fe-59------>				0.000E+00	0.000E+00
	Ni-59------>				0.000E+00	0.000E+00
	Co-60------>	1.200E-03			1.200E-03	1.200E-03
	Ni-63------>				0.000E+00	0.000E+00
	Zn-65------>				0.000E+00	0.000E+00
	Se-79------>				0.000E+00	0.000E+00
	Kr-85------>				0.000E+00	0.000E+00
	Sr-89------>				0.000E+00	0.000E+00
	Sr-90------>	1.700E-05			1.700E-05	1.700E-05
	Y-90------>	****		****	1.700E-05	1.700E-05
	Y-91------>				0.000E+00	0.000E+00
	Zr-93------>				0.000E+00	0.000E+00
	Nb-93m------>				0.000E+00	0.000E+00
	Nb-94------>				0.000E+00	0.000E+00
	Zr-95------>				0.000E+00	0.000E+00
	Nb-95------>				0.000E+00	0.000E+00
	Nb-95m------>				0.000E+00	0.000E+00
	Tc-99------>				0.000E+00	0.000E+00
	Ru-103------>				0.000E+00	0.000E+00
	Rh-103m------>	****		****	0.000E+00	0.000E+00
	Ru-106------>				0.000E+00	0.000E+00
	Rh-106------>	****		****	0.000E+00	0.000E+00
	Pd-107------>				0.000E+00	0.000E+00
	Cd-109------>				0.000E+00	0.000E+00
	Ag-110m------>				0.000E+00	0.000E+00
	Ag-110------>	****		****	0.000E+00	0.000E+00
	Sn-113------>				0.000E+00	0.000E+00
	In-113m------>	****		****	0.000E+00	0.000E+00
	Cd-113m------>				0.000E+00	0.000E+00
	Cd-115m------>				0.000E+00	0.000E+00
	Sn-119m------>				0.000E+00	0.000E+00
	Sn-121m------>				0.000E+00	0.000E+00
	Sn-123------>				0.000E+00	0.000E+00
	Te-123m------>				0.000E+00	0.000E+00
	Sb-124------>				0.000E+00	0.000E+00
	Sb-125------>				0.000E+00	0.000E+00
	Te-125m------>				0.000E+00	0.000E+00
	Sn-126------>				0.000E+00	0.000E+00
	Sb-126m------>	****		****	0.000E+00	0.000E+00
	Sb-126------>				0.000E+00	0.000E+00
	Te-127m------>				0.000E+00	0.000E+00
	Te-127------>	****		****	0.000E+00	0.000E+00
	Te-129m------>				0.000E+00	0.000E+00
	Te-129------>	****		****	0.000E+00	0.000E+00
	I-129------>				0.000E+00	0.000E+00
	I-131------>				0.000E+00	0.000E+00
	Cs-134------>				0.000E+00	0.000E+00
	Cs-135------>				0.000E+00	0.000E+00

	Cs-136------>				0.000E+00	0.000E+00
	Cs-137------>	1.100E-04			1.100E-04	1.100E-04
	Ba-137m----->	****		****	1.041E-04	1.041E-04
	Ba-140------>				0.000E+00	0.000E+00
	La-140------>	****		****	0.000E+00	0.000E+00
	Ce-141------>				0.000E+00	0.000E+00
	Pr-143------>				0.000E+00	0.000E+00
	Ce-144------>				0.000E+00	0.000E+00
	Pr-144------>	****		****	0.000E+00	0.000E+00
	Pr-144m------>				0.000E+00	0.000E+00
	Nd-147------>				0.000E+00	0.000E+00
	Pm-147------>				0.000E+00	0.000E+00
	Pm-148m------>				0.000E+00	0.000E+00
	Pm-148------>	****		****	0.000E+00	0.000E+00
	Sm-151------>				0.000E+00	0.000E+00
	Eu-152------>				0.000E+00	0.000E+00
	Gd-153------>				0.000E+00	0.000E+00
	Eu-154------>				0.000E+00	0.000E+00
	Eu-155------>				0.000E+00	0.000E+00
	Eu-156------>				0.000E+00	0.000E+00
	Tb-160------>				0.000E+00	0.000E+00
	Ta-182------>				0.000E+00	0.000E+00
	Ra-226------>				0.000E+00	0.000E+00
	U-233------>				0.000E+00	0.000E+00
	U-234------>				0.000E+00	0.000E+00
	U-235------>				0.000E+00	0.000E+00
	U-236------>				0.000E+00	0.000E+00
	U-237------>				0.000E+00	0.000E+00
	U-238------>				0.000E+00	0.000E+00
	Np-237------>				0.000E+00	0.000E+00
	Pu-238------>				0.000E+00	0.000E+00
	Pu-239------>				0.000E+00	0.000E+00
	Pu-240------>				0.000E+00	0.000E+00
	Pu-241------>				0.000E+00	0.000E+00
	Pu-242------>				0.000E+00	0.000E+00
	Am-241------>				0.000E+00	0.000E+00
	Am-242m------>				0.000E+00	0.000E+00
	Am-242------>	****		****	0.000E+00	0.000E+00
	Am-243------>				0.000E+00	0.000E+00
	Cm-242------>				0.000E+00	0.000E+00
	Cm-244------>				0.000E+00	0.000E+00

PROGRAM to CLASSIFY RADIOACTIVE WASTE				
CONTAINERS for TRANSPORTATION and DISPOSAL		FILE REF:	Lower 1S	
CP Deltete...Analytical Resources, Inc., 2/85 & 6/90				
(Modified for DOE Radionuclides and Thermal Wattage..		DATE:	6/1/95	
RP Genoni/JG Field..Westinghouse-Hanford Co....6/88)				
		BY:	J.R. Green	J R Green 6/5/95
Originally Published by the Electric Power Research			T.M. Kaufman	T.M. Kaufman 6/5/95
Institute in NP-4938 and NP-4757		CHECKED:	J.E. Mercado	J.E. Mercado 6/6/95
*** WASTE GENERAL INFORMATION ***				
Enter waste description----------	>			
" ----------	>			
" ----------	>			
Enter waste form ("Special" or "Normal")----------	>	Normal	>> Reqd input for DOT calculations	
Enter physical form ("Solid", "Liquid" or "Gas")----------	>	Liquid	>> Reqd input for DOT calculations	
Is waste Activated Metal ? ("Yes", or "No")----------	>	No	>> Reqd input for 10CFR61 calculation	
Enter container type (1=55 gal. drum, 2=4x4 liner----------	>	1	>> Reqd input for H2 calculations	
3=5x5 liner, 4=6x6 liner)				
Is container a vented HIC ? ("Yes", or "No")----------	>	No	*Note: For a vented HIC, assume	
			"Date sealed" is date shipped in Cask	
Enter date of curie calculations ----------	>	06/01/95		
Enter date last sealed*----------	>	06/01/95	>>	
Enter date to be shipped----------	>	06/01/95	>> Must be later than Ci calcs	
Enter date of shipment receipt----------	>	06/01/05		
CALCULATED Decay before sealing (years)	=	0.00	Days=	0
CALCULATED Decay before shipment (years)	=	0.00	Days=	0
CALCULATED Duration package is sealed (years)	=	10.01	Days=	3653
Enter package interior volume----------	>	10.5	Ft3	
Enter waste volume----------	>	7.9	Ft3	
CALCULATED Container void volume:		2.57	Ft3	
Enter estimated waste void volume----------	>		Ft3	
** OR **				
Enter waste true density (vendor data)----------	>	46.1	Lbs/Ft3	
CALCULATED Waste void fraction	=	-0.002		
CALCULATED Waste void volume	=	0.0	Ft3	
CALCULATED Package interior volume	=	2.965E+05	cc	
CALCULATED Waste volume	=	2.237E+05	cc	
CALCULATED Total void volume	=	7.227E+04	cc	
Enter waste weight----------	>	365	Lbs	
CALCULATED Weight	=	1.657E+05	gms	
CALCULATED Waste bulk density	=	0.7408	gms/cc	
Enter G-H2 (molecules/100 ev)----------	>	0.50		
OR				
Enter volume cation resin (cu ft)----------	>			
Enter volume anion resin (cu ft)----------	>			
Enter volume mix bed resin (cu ft)----------	>			
Enter volume other resin (cu ft)----------	>			
Enter G-H2 of other resin----------	>			
CALCULATED G-H2 for waste	=	0.00		
*** CALCULATED RESULTS ***				

H2 Generation Summary:				
Total Integrated Dose	=	1.963E+05	Rads	
H2 Volume	=	3.791E+02	cm3	
H2 Concentration	=	0.52173	%	
H2 Generation Rate	=	4.324E-03	cc/hr	
Pressure Buildup Rate	=	2.112E-05	psi/day	
Pressure (seal to ship)	=	0.00	psi	
Enter Measured H2 Concentration (if known)----------	>	0.00	%	
Ratio Measured to Calculated H2 Concentrations	=	0.00		
Activity Summary @ Shipment:				
Total Activity*	=	2.639E-01	Ci	(*Excludes Daughters
Specific Activity, Total*	=	0.001	mCi/cc	with T 1/2 < 10 days)
Specific Activity*, T 1/2 < 5 Years	==	5.924E-02	µCi/cc	
T 1/2 > 5 Years	==	1.180E+00	µCi/cc	>> Verify Disposal License
Decay Heat @ Shipment:				
Decay Heat @ Shipment	=	0.004	Watts	
or		0.013	BTU/hr	
Fissile Material:				
Fissile Material (49 CFR 173 & 10 CFR 71)	==	0.000	gms	
Other DOE Fissile Material (DOE 5480.1A)		0.000	gms	>> Isotope list is incomplete
Special Nuclear Material:				
Special Nuclear Material (SNM)	==	0.000	gms	
Other DOE Accountable Material (DOE 5633.3)	==	0.000	gms	>> Isotope list is incomplete
Transuranics:				
Specific Activity, Transuranics	==	0.000	nCi/gms	
10 CFR 61.55 Classification:		Unity Fraction		Classification
Table 1 Isotopes	==	0.000	A	Class A
(Long Lived)		N/A	B	
		0.000	C	Limiting Isotope
				Sr-90
Table 2 Isotopes	==	0.268	A	
(Short Lived)		0.001	B	Miscellaneous
		0.000	C	
Transportation Classification:		Unity Fraction		
LSA Determination	==	7.563E-03	LSA	
Type Determination	==	4.166E-02	Type'A'	
Highway Route Control (HRC) Determination	==	1.389E-05	Non HRC	
Limited Quantity (LQ) Determination	==	4.166E+02	> LQ	
Advance Notification Quantity ?	==	No		
EPA Reportable Quantity (RQ) Determination	==	5.600E-02		

	INPUT: LISTED ISOTOPES				
	(**** = Daughter Product)			Curies when	Curies when
		Curies	or	%	Sealed	Shipped
	Total Curies				
	(ONLY if entering %) =			xxxxx	xxxxx
	H-3------>			0.000E+00	0.000E+00
	C-14------>			0.000E+00	0.000E+00
	Na-22------>			0.000E+00	0.000E+00
	Cr-51------>			0.000E+00	0.000E+00
	Mn-54------>			0.000E+00	0.000E+00
	Fe-55------>			0.000E+00	0.000E+00
	Co-57------>			0.000E+00	0.000E+00
	Co-58------>			0.000E+00	0.000E+00
	Fe-59------>			0.000E+00	0.000E+00
	Ni-59------>			0.000E+00	0.000E+00
	Co-60------>	2.500E-01		2.500E-01	2.500E-01
	Ni-63------>			0.000E+00	0.000E+00
	Zn-65------>			0.000E+00	0.000E+00
	Se-79------>			0.000E+00	0.000E+00
	Kr-85------>			0.000E+00	0.000E+00
	Sr-89------>			0.000E+00	0.000E+00
	Sr-90------>	1.900E-03		1.900E-03	1.900E-03
	Y-90------>	****		**** 1.900E-03	1.900E-03
	Y-91------>			0.000E+00	0.000E+00
	Zr-93------>			0.000E+00	0.000E+00
	Nb-93m------>			0.000E+00	0.000E+00
	Nb-94------>			0.000E+00	0.000E+00
	Zr-95------>			0.000E+00	0.000E+00
	Nb-95------>			0.000E+00	0.000E+00
	Nb-95m------>			0.000E+00	0.000E+00
	Tc-99------>			0.000E+00	0.000E+00
	Ru-103------>			0.000E+00	0.000E+00
	Rh-103m------>	****		**** 0.000E+00	0.000E+00
	Ru-106------>			0.000E+00	0.000E+00
	Rh-106------>	****		**** 0.000E+00	0.000E+00
	Pd-107------>			0.000E+00	0.000E+00
	Cd-109------>			0.000E+00	0.000E+00
	Ag-110m------>			0.000E+00	0.000E+00
	Ag-110------>	****		**** 0.000E+00	0.000E+00
	Sn-113------>			0.000E+00	0.000E+00
	In-113m------>	****		**** 0.000E+00	0.000E+00
	Cd-113m------>			0.000E+00	0.000E+00
	Cd-115m------>			0.000E+00	0.000E+00
	Sn-119m------>			0.000E+00	0.000E+00
	Sn-121m------>			0.000E+00	0.000E+00
	Sn-123------>			0.000E+00	0.000E+00
	Te-123m------>			0.000E+00	0.000E+00
	Sb-124------>			0.000E+00	0.000E+00
	Sb-125------>			0.000E+00	0.000E+00
	Te-125m------>			0.000E+00	0.000E+00
	Sn-126------>			0.000E+00	0.000E+00
	Sb-126m------>	****		**** 0.000E+00	0.000E+00
	Sb-126------>			0.000E+00	0.000E+00
	Te-127m------>			0.000E+00	0.000E+00
	Te-127------>	****		**** 0.000E+00	0.000E+00
	Te-129m------>			0.000E+00	0.000E+00
	Te-129------>	****		**** 0.000E+00	0.000E+00
	I-129------>			0.000E+00	0.000E+00
	I-131------>			0.000E+00	0.000E+00
	Cs-134------>			0.000E+00	0.000E+00
	Cs-135------>			0.000E+00	0.000E+00

	Cs-136------>				0.000E+00	0.000E+00
	Cs-137------>	1.200E-02			1.200E-02	1.200E-02
	Ba-137m----->	****		****	1.135E-02	1.135E-02
	Ba-140------>				0.000E+00	0.000E+00
	La-140------>	****		****	0.000E+00	0.000E+00
	Ce-141------>				0.000E+00	0.000E+00
	Pr-143------>				0.000E+00	0.000E+00
	Ce-144------>				0.000E+00	0.000E+00
	Pr-144------>	****		****	0.000E+00	0.000E+00
	Pr-144m----->				0.000E+00	0.000E+00
	Nd-147------>				0.000E+00	0.000E+00
	Pm-147------>				0.000E+00	0.000E+00
	Pm-148m----->				0.000E+00	0.000E+00
	Pm-148------>	****		****	0.000E+00	0.000E+00
	Sm-151------>				0.000E+00	0.000E+00
	Eu-152------>				0.000E+00	0.000E+00
	Gd-153------>				0.000E+00	0.000E+00
	Eu-154------>				0.000E+00	0.000E+00
	Eu-155------>				0.000E+00	0.000E+00
	Eu-156------>				0.000E+00	0.000E+00
	Tb-160------>				0.000E+00	0.000E+00
	Ta-182------>				0.000E+00	0.000E+00
	Ra-226------>				0.000E+00	0.000E+00
	U-233------>				0.000E+00	0.000E+00
	U-234------>				0.000E+00	0.000E+00
	U-235------>				0.000E+00	0.000E+00
	U-236------>				0.000E+00	0.000E+00
	U-237------>				0.000E+00	0.000E+00
	U-238------>				0.000E+00	0.000E+00
	Np-237------>				0.000E+00	0.000E+00
	Pu-238------>				0.000E+00	0.000E+00
	Pu-239------>				0.000E+00	0.000E+00
	Pu-240------>				0.000E+00	0.000E+00
	Pu-241------>				0.000E+00	0.000E+00
	Pu-242------>				0.000E+00	0.000E+00
	Am-241------>				0.000E+00	0.000E+00
	Am-242m----->				0.000E+00	0.000E+00
	Am-242------>	****		****	0.000E+00	0.000E+00
	Am-243------>				0.000E+00	0.000E+00
	Cm-242------>				0.000E+00	0.000E+00
	Cm-244------>				0.000E+00	0.000E+00

PROGRAM to CLASSIFY RADIOACTIVE WASTE				
CONTAINERS for TRANSPORTATION and DISPOSAL		FILE REF:	Lower 2S	
CP Deltete...Analytical Resources, Inc., 2/85 & 6/90				
(Modified for DOE Radionuclides and Thermal Wattage..		DATE:	6/1/95	
RP Genoni/JG Field..Westinghouse-Hanford Co....6/88)				
		BY:	J.R. Green	J R Green 6/5/95
Originally Published by the Electric Power Research			T.M. Kaufman	T.M. Kaufman 6/5/95
Institute in NP-4938 and NP-4757		CHECKED:	J.E. Mercado	J.E. Mercado 6/6/95
*** WASTE GENERAL INFORMATION ***				
Enter waste description----------	>			
" ----------	>			
" ----------	>			
Enter waste form ("Special" or "Normal")----------	>	Normal	>> Reqd input for DOT calculations	
Enter physical form ("Solid", "Liquid" or "Gas")----------	>	Liquid	>> Reqd input for DOT calculations	
Is waste Activated Metal ? ("Yes", or "No")----------	>	No	>> Reqd input for 10CFR61 calculation	
Enter container type (1=55 gal. drum, 2=4x4 liner----------	>	1	>> Reqd input for H2 calculations	
3=5x5 liner, 4=6x6 liner)				
Is container a vented HIC ? ("Yes", or "No")----------	>	No	*Note: For a vented HIC, assume	
			"Date sealed" is date shipped in Cask	
Enter date of curie calculations ----------	>	06/01/95		
Enter date last sealed*----------	>	06/01/95	>>	
Enter date to be shipped----------	>	06/01/95	>> Must be later than Ci calcs	
Enter date of shipment receipt----------	>	06/01/05		
CALCULATED Decay before sealing (years)	=	0.00	Days=	0
CALCULATED Decay before shipment (years)	=	0.00	Days=	0
CALCULATED Duration package is sealed (years)	=	10.01	Days=	3653
Enter package interior volume----------	>	10.5	Ft3	
Enter waste volume----------	>	7.9	Ft3	
CALCULATED Container void volume:		2.57	Ft3	
Enter estimated waste void volume----------	>		Ft3	
** OR **				
Enter waste true density (vendor data)----------	>	46.1	Lbs/Ft3	
CALCULATED Waste void fraction	=	-0.002		
CALCULATED Waste void volume	=	0.0	Ft3	
CALCULATED Package interior volume	=	2.965E+05	cc	
CALCULATED Waste volume	=	2.237E+05	cc	
CALCULATED Total void volume	=	7.227E+04	cc	
Enter waste weight----------	>	365	Lbs	
CALCULATED Weight	=	1.657E+05	gms	
CALCULATED Waste bulk density	=	0.7408	gms/cc	
Enter G-H2 (molecules/100 ev)----------	>	0.50		
OR				
Enter volume cation resin (cu ft)----------	>			
Enter volume anion resin (cu ft)----------	>			
Enter volume mix bed resin (cu ft)----------	>			
Enter volume other resin (cu ft)----------	>			
Enter G-H2 of other resin----------	>			
CALCULATED G-H2 for waste	=	0.00		
*** CALCULATED RESULTS ***				

H2 Generation Summary:				
Total Integrated Dose	=	6.081E+04	Rads	
H2 Volume	=	1.174E+02	cm3	
H2 Concentration	=	0.16218	%	
H2 Generation Rate	=	1.339E-03	cc/hr	
Pressure Buildup Rate	=	6.540E-06	psi/day	
Pressure (seal to ship)	=	0.00	psi	
Enter Measured H2 Concentration (if known)----------	>	0.00	%	
Ratio Measured to Calculated H2 Concentrations	=	0.00		
Activity Summary @ Shipment:				
Total Activity*	=	8.132E-02	Ci	(*Excludes Daughters
Specific Activity, Total*	=	0.000	mCi/cc	with T 1/2 < 10 days)
Specific Activity*, T 1/2 < 5 Years	=	9.888E-03	µCi/cc	
T 1/2 > 5 Years	=	3.635E-01	µCi/cc	
Decay Heat @ Shipment:				
Decay Heat @ Shipment	=	0.001	Watts	
or		0.004	BTU/hr	
Fissile Material:				
Fissile Material (49 CFR 173 & 10 CFR 71)	=	0.000	gms	
Other DOE Fissile Material (DOE 5480.1A)		0.000	gms	>> Isotope list is incomplete
Special Nuclear Material:				
Special Nuclear Material (SNM)	=	0.000	gms	
Other DOE Accountable Material (DOE 5633.3)	=	0.000	gms	>> Isotope list is incomplete
Transuranics:				
Specific Activity, Transuranics	=	0.000	nCi/gms	
10 CFR 61.55 Classification:		Unity Fraction		Classification
Table 1 Isotopes	=	0.000	A	Class A
(Long Lived)		N/A	B	
		0.000	C	Limiting Isotope
				Sr-90
Table 2 Isotopes	=	0.045	A	
(Short Lived)		0.000	B	Miscellaneous
		0.000	C	
Transportation Classification:		Unity Fraction		
LSA Determination	=	2.016E-03	LSA	
Type Determination	=	1.229E-02	Type'A'	
Highway Route Control (HRC) Determination	=	4.095E-06	Non HRC	
Limited Quantity (LQ) Determination	=	1.229E+02	> LQ	
Advance Notification Quantity ?	=	No		
EPA Reportable Quantity (RQ) Determination	=	1.310E-02		

	INPUT: LISTED ISOTOPES					
	(**** = Daughter Product)				Curies when	Curies when
		Curies	or	%	Sealed	Shipped
	Total Curies					
	(ONLY if entering %) =				xxxxx	xxxxx
	H-3------>				0.000E+00	0.000E+00
	C-14------>				0.000E+00	0.000E+00
	Na-22------>				0.000E+00	0.000E+00
	Cr-51------>				0.000E+00	0.000E+00
	Mn-54------>				0.000E+00	0.000E+00
	Fe-55------>				0.000E+00	0.000E+00
	Co-57------>				0.000E+00	0.000E+00
	Co-58------>				0.000E+00	0.000E+00
	Fe-59------>				0.000E+00	0.000E+00
	Ni-59------>				0.000E+00	0.000E+00
	Co-60------>	7.900E-02			7.900E-02	7.900E-02
	Ni-63------>				0.000E+00	0.000E+00
	Zn-65------>				0.000E+00	0.000E+00
	Se-79------>				0.000E+00	0.000E+00
	Kr-85------>				0.000E+00	0.000E+00
	Sr-89------>				0.000E+00	0.000E+00
	Sr-90------>	3.200E-04			3.200E-04	3.200E-04
	Y-90------>	****		****	3.200E-04	3.200E-04
	Y-91------>				0.000E+00	0.000E+00
	Zr-93------>				0.000E+00	0.000E+00
	Nb-93m------>				0.000E+00	0.000E+00
	Nb-94------>				0.000E+00	0.000E+00
	Zr-95------>				0.000E+00	0.000E+00
	Nb-95------>				0.000E+00	0.000E+00
	Nb-95m------>				0.000E+00	0.000E+00
	Tc-99------>				0.000E+00	0.000E+00
	Ru-103------>				0.000E+00	0.000E+00
	Rh-103m----->	****		****	0.000E+00	0.000E+00
	Ru-106------>				0.000E+00	0.000E+00
	Rh-106------>	****		****	0.000E+00	0.000E+00
	Pd-107------>				0.000E+00	0.000E+00
	Cd-109------>				0.000E+00	0.000E+00
	Ag-110m------>				0.000E+00	0.000E+00
	Ag-110------>	****		****	0.000E+00	0.000E+00
	Sn-113------>				0.000E+00	0.000E+00
	In-113m----->	****		****	0.000E+00	0.000E+00
	Cd-113m----->				0.000E+00	0.000E+00
	Cd-115m----->				0.000E+00	0.000E+00
	Sn-119m------>				0.000E+00	0.000E+00
	Sn-121m------>				0.000E+00	0.000E+00
	Sn-123------>				0.000E+00	0.000E+00
	Te-123m------>				0.000E+00	0.000E+00
	Sb-124------>				0.000E+00	0.000E+00
	Sb-125------>				0.000E+00	0.000E+00
	Te-125m----->				0.000E+00	0.000E+00
	Sn-126----->				0.000E+00	0.000E+00
	Sb-126m----->	****		****	0.000E+00	0.000E+00
	Sb-126----->				0.000E+00	0.000E+00
	Te-127m----->				0.000E+00	0.000E+00
	Te-127----->	****		****	0.000E+00	0.000E+00
	Te-129m----->				0.000E+00	0.000E+00
	Te-129----->	****		****	0.000E+00	0.000E+00
	I-129------>				0.000E+00	0.000E+00
	I-131------>				0.000E+00	0.000E+00
	Cs-134------>				0.000E+00	0.000E+00
	Cs-135------>				0.000E+00	0.000E+00

	Cs-136------>				0.000E+00	0.000E+00
	Cs-137------>	2.000E-03			2.000E-03	2.000E-03
	Ba-137m----->	****		****	1.892E-03	1.892E-03
	Ba-140------>				0.000E+00	0.000E+00
	La-140------>	****		****	0.000E+00	0.000E+00
	Ce-141------>				0.000E+00	0.000E+00
	Pr-143------>				0.000E+00	0.000E+00
	Ce-144------>				0.000E+00	0.000E+00
	Pr-144------>	****		****	0.000E+00	0.000E+00
	Pr-144m----->				0.000E+00	0.000E+00
	Nd-147------>				0.000E+00	0.000E+00
	Pm-147------>				0.000E+00	0.000E+00
	Pm-148m----->				0.000E+00	0.000E+00
	Pm-148------>	****		****	0.000E+00	0.000E+00
	Sm-151------>				0.000E+00	0.000E+00
	Eu-152------>				0.000E+00	0.000E+00
	Gd-153------>				0.000E+00	0.000E+00
	Eu-154------>				0.000E+00	0.000E+00
	Eu-155------>				0.000E+00	0.000E+00
	Eu-156------>				0.000E+00	0.000E+00
	Tb-160------>				0.000E+00	0.000E+00
	Ta-182------>				0.000E+00	0.000E+00
	Ra-226------>				0.000E+00	0.000E+00
	U-233------>				0.000E+00	0.000E+00
	U-234------>				0.000E+00	0.000E+00
	U-235------>				0.000E+00	0.000E+00
	U-236------>				0.000E+00	0.000E+00
	U-237------>				0.000E+00	0.000E+00
	U-238------>				0.000E+00	0.000E+00
	Np-237------>				0.000E+00	0.000E+00
	Pu-238------>				0.000E+00	0.000E+00
	Pu-239------>				0.000E+00	0.000E+00
	Pu-240------>				0.000E+00	0.000E+00
	Pu-241------>				0.000E+00	0.000E+00
	Pu-242------>				0.000E+00	0.000E+00
	Am-241------>				0.000E+00	0.000E+00
	Am-242m----->				0.000E+00	0.000E+00
	Am-242------>	****		****	0.000E+00	0.000E+00
	Am-243------>				0.000E+00	0.000E+00
	Cm-242------>				0.000E+00	0.000E+00
	Cm-244------>				0.000E+00	0.000E+00

PROGRAM to CLASSIFY RADIOACTIVE WASTE				
CONTAINERS for TRANSPORTATION and DISPOSAL		FILE REF:	Lower 3S	
CP Deltete...Analytical Resources, Inc., 2/85 & 6/90				
(Modified for DOE Radionuclides and Thermal Wattage..		DATE:	6/1/95	
RP Genoni/JG Field..Westinghouse-Hanford Co....6/88)				
		BY:	J.R. Green	J R Green 6/5/95
Originally Published by the Electric Power Research			T.M. Kaufman	T.M. Kaufman 6/5/95
Institute in NP-4938 and NP-4757		CHECKED:	J.E. Mercado	J. E. Mercado 6/6/95
*** WASTE GENERAL INFORMATION ***				
Enter waste description----------	>			
" ----------	>			
" ----------	>			
Enter waste form ("Special" or "Normal")----------	>	Normal	>> Reqd input for DOT calculations	
Enter physical form ("Solid", "Liquid" or "Gas")----------	>	Liquid	>> Reqd input for DOT calculations	
Is waste Activated Metal ? ("Yes", or "No")----------	>	No	>> Reqd input for 10CFR61 calculation	
Enter container type (1=55 gal. drum, 2=4x4 liner----------	>	1	>> Reqd input for H2 calculations	
3=5x5 liner, 4=6x6 liner)				
Is container a vented HIC ? ("Yes", or "No")----------	>	No	*Note: For a vented HIC, assume	
			"Date sealed" is date shipped in Cask	
Enter date of curie calculations ----------	>	06/01/95		
Enter date last sealed*----------	>	06/01/95	>>	
Enter date to be shipped----------	>	06/01/95	>> Must be later than Ci calcs	
Enter date of shipment receipt----------	>	06/01/05		
CALCULATED Decay before sealing (years)	=	0.00	Days=	0
CALCULATED Decay before shipment (years)	=	0.00	Days=	0
CALCULATED Duration package is sealed (years)	=	10.01	Days=	3653
Enter package interior volume----------	>	31.4	Ft3	
Enter waste volume----------	>	22.1	Ft3	
CALCULATED Container void volume:		9.30	Ft3	
Enter estimated waste void volume----------	>		Ft3	
** OR **				
Enter waste true density (vendor data)----------	>	46.1	Lbs/Ft3	
CALCULATED Waste void fraction	=	-0.001		
CALCULATED Waste void volume	=	0.0	Ft3	
CALCULATED Package interior volume	=	8.892E+05	cc	
CALCULATED Waste volume	=	6.258E+05	cc	
CALCULATED Total void volume	=	2.626E+05	cc	
Enter waste weight----------	>	1020	Lbs	
CALCULATED Weight	=	4.631E+05	gms	
CALCULATED Waste bulk density	=	0.7400	gms/cc	
Enter G-H2 (molecules/100 ev)----------	>	0.50		
OR				
Enter volume cation resin (cu ft)----------	>			
Enter volume anion resin (cu ft)----------	>			
Enter volume mix bed resin (cu ft)----------	>			
Enter volume other resin (cu ft)----------	>			
Enter G-H2 of other resin----------	>			
CALCULATED G-H2 for waste	=	0.00		
*** CALCULATED RESULTS ***				

H2 Generation Summary:				
Total Integrated Dose	=	1.382E+04	Rads	
H2 Volume	=	7.456E+01	cm3	
H2 Concentration	=	0.02838	%	
H2 Generation Rate	=	8.504E-04	cc/hr	
Pressure Buildup Rate	=	1.143E-06	psi/day	
Pressure (seal to ship)	=	0.00	psi	
Enter Measured H2 Concentration (if known)----------	>	0.00	%	
Ratio Measured to Calculated H2 Concentrations	=	0.00		
Activity Summary @ Shipment:				
Total Activity*	=	6.463E-02	Ci	(*Excludes Daughters
Specific Activity, Total*	=	0.000	mCi/cc	with T 1/2 < 10 days)
Specific Activity*, T 1/2 < 5 Years	==	9.704E-02	µCi/cc	
T 1/2 > 5 Years	==	1.033E-01	µCi/cc	
Decay Heat @ Shipment:				
Decay Heat @ Shipment	=	0.000	Watts	
or		0.001	BTU/hr	
Fissile Material:				
Fissile Material (49 CFR 173 & 10 CFR 71)	==	0.000	gms	
Other DOE Fissile Material (DOE 5480.1A)		0.000	gms	>> Isotope list is incomplete
Special Nuclear Material:				
Special Nuclear Material (SNM)	==	0.000	gms	
Other DOE Accountable Material (DOE 5633.3)	==	0.000	gms	>> Isotope list is incomplete
Transuranics:				
Specific Activity, Transuranics	==	0.000	nCi/gms	
10 CFR 61.55 Classification:		Unity Fraction		Classification
Table 1 Isotopes	==	0.000	A	Class A
(Long Lived)		N/A	B	
		0.000	C	Limiting Isotope
				Sr-90
Table 2 Isotopes	==	0.436	A	
(Short Lived)		0.002	B	Miscellaneous
		0.000	C	
Transportation Classification:		Unity Fraction		
LSA Determination	==	4.160E-03	LSA	
Type Determination	==	2.738E-02	Type'A'	
Highway Route Control (HRC) Determination	==	9.128E-06	Non HRC	
Limited Quantity (LQ) Determination	==	2.738E+02	> LQ	
Advance Notification Quantity ?	==	No		
EPA Reportable Quantity (RQ) Determination	==	1.421E-01		

	INPUT: LISTED ISOTOPES					
	(**** = Daughter Product)				Curies when	Curies when
		Curies	or	%	Sealed	Shipped
	Total Curies					
	(ONLY if entering %) =				xxxxx	xxxxx
	H-3------>				0.000E+00	0.000E+00
	C-14------>				0.000E+00	0.000E+00
	Na-22------>				0.000E+00	0.000E+00
	Cr-51------>				0.000E+00	0.000E+00
	Mn-54------>				0.000E+00	0.000E+00
	Fe-55------>				0.000E+00	0.000E+00
	Co-57------>				0.000E+00	0.000E+00
	Co-58------>				0.000E+00	0.000E+00
	Fe-59------>				0.000E+00	0.000E+00
	Ni-59------>				0.000E+00	0.000E+00
	Co-60------>	9.300E-04			9.300E-04	9.300E-04
	Ni-63------>				0.000E+00	0.000E+00
	Zn-65------>				0.000E+00	0.000E+00
	Se-79------>				0.000E+00	0.000E+00
	Kr-85------>				0.000E+00	0.000E+00
	Sr-89------>				0.000E+00	0.000E+00
	Sr-90------>	8.700E-03			8.700E-03	8.700E-03
	Y-90------>	****		****	8.700E-03	8.700E-03
	Y-91------>				0.000E+00	0.000E+00
	Zr-93------>				0.000E+00	0.000E+00
	Nb-93m------>				0.000E+00	0.000E+00
	Nb-94------>				0.000E+00	0.000E+00
	Zr-95------>				0.000E+00	0.000E+00
	Nb-95------>				0.000E+00	0.000E+00
	Nb-95m------>				0.000E+00	0.000E+00
	Tc-99------>				0.000E+00	0.000E+00
	Ru-103------>				0.000E+00	0.000E+00
	Rh-103m------>	****		****	0.000E+00	0.000E+00
	Ru-106------>				0.000E+00	0.000E+00
	Rh-106------>	****		****	0.000E+00	0.000E+00
	Pd-107------>				0.000E+00	0.000E+00
	Cd-109------>				0.000E+00	0.000E+00
	Ag-110m------>				0.000E+00	0.000E+00
	Ag-110------>	****		****	0.000E+00	0.000E+00
	Sn-113------>				0.000E+00	0.000E+00
	In-113m------>	****		****	0.000E+00	0.000E+00
	Cd-113m------>				0.000E+00	0.000E+00
	Cd-115m------>				0.000E+00	0.000E+00
	Sn-119m------>				0.000E+00	0.000E+00
	Sn-121m------>				0.000E+00	0.000E+00
	Sn-123------>				0.000E+00	0.000E+00
	Te-123m------>				0.000E+00	0.000E+00
	Sb-124------>				0.000E+00	0.000E+00
	Sb-125------>				0.000E+00	0.000E+00
	Te-125m------>				0.000E+00	0.000E+00
	Sn-126------>				0.000E+00	0.000E+00
	Sb-126m------>	****		****	0.000E+00	0.000E+00
	Sb-126------>				0.000E+00	0.000E+00
	Te-127m------>				0.000E+00	0.000E+00
	Te-127------>	****		****	0.000E+00	0.000E+00
	Te-129m------>				0.000E+00	0.000E+00
	Te-129------>	****		****	0.000E+00	0.000E+00
	I-129------>				0.000E+00	0.000E+00
	I-131------>				0.000E+00	0.000E+00
	Cs-134------>				0.000E+00	0.000E+00
	Cs-135------>				0.000E+00	0.000E+00

	Cs-136------>				0.000E+00	0.000E+00
	Cs-137------>	5.500E-02			5.500E-02	5.500E-02
	Ba-137m----->	****		****	5.203E-02	5.203E-02
	Ba-140----->				0.000E+00	0.000E+00
	La-140------>	****		****	0.000E+00	0.000E+00
	Ce-141------>				0.000E+00	0.000E+00
	Pr-143------>				0.000E+00	0.000E+00
	Ce-144------>				0.000E+00	0.000E+00
	Pr-144------>	****		****	0.000E+00	0.000E+00
	Pr-144m----->				0.000E+00	0.000E+00
	Nd-147------>				0.000E+00	0.000E+00
	Pm-147------>				0.000E+00	0.000E+00
	Pm-148m----->				0.000E+00	0.000E+00
	Pm-148------>	****		****	0.000E+00	0.000E+00
	Sm-151------>				0.000E+00	0.000E+00
	Eu-152------>				0.000E+00	0.000E+00
	Gd-153------>				0.000E+00	0.000E+00
	Eu-154------>				0.000E+00	0.000E+00
	Eu-155------>				0.000E+00	0.000E+00
	Eu-156------>				0.000E+00	0.000E+00
	Tb-160------>				0.000E+00	0.000E+00
	Ta-182------>				0.000E+00	0.000E+00
	Ra-226------>				0.000E+00	0.000E+00
	U-233------>				0.000E+00	0.000E+00
	U-234------>				0.000E+00	0.000E+00
	U-235------>				0.000E+00	0.000E+00
	U-236------>				0.000E+00	0.000E+00
	U-237------>				0.000E+00	0.000E+00
	U-238------>				0.000E+00	0.000E+00
	Np-237------>				0.000E+00	0.000E+00
	Pu-238------>				0.000E+00	0.000E+00
	Pu-239------>				0.000E+00	0.000E+00
	Pu-240------>				0.000E+00	0.000E+00
	Pu-241------>				0.000E+00	0.000E+00
	Pu-242------>				0.000E+00	0.000E+00
	Am-241------>				0.000E+00	0.000E+00
	Am-242m----->				0.000E+00	0.000E+00
	Am-242------>	****		****	0.000E+00	0.000E+00
	Am-243------>				0.000E+00	0.000E+00
	Cm-242------>				0.000E+00	0.000E+00
	Cm-244------>				0.000E+00	0.000E+00

PROGRAM to CLASSIFY RADIOACTIVE WASTE				
CONTAINERS for TRANSPORTATION and DISPOSAL		FILE REF:	Lower 4S	
CP Deltete...Analytical Resources, Inc., 2/85 & 6/90				
(Modified for DOE Radionuclides and Thermal Wattage..		DATE:	6/1/95	
RP Genoni/JG Field..Westinghouse-Hanford Co....6/88)				
		BY:	J.R. Green	J R Green 6/5/95
Originally Published by the Electric Power Research			T.M. Kaufman	T.M. Kaufman 6/5/95
Institute in NP-4938 and NP-4757		CHECKED:	J.E. Mercado	J.E. Mercado 6/6/95
*** WASTE GENERAL INFORMATION ***				
Enter waste description----------	>			
" ----------	>			
" ----------	>			
Enter waste form ("Special" or "Normal")----------	>	Normal	>> Reqd input for DOT calculations	
Enter physical form ("Solid", "Liquid" or "Gas")----------	>	Liquid	>> Reqd input for DOT calculations	
Is waste Activated Metal ? ("Yes", or "No")----------	>	No	>> Reqd input for 10CFR61 calculation	
Enter container type (1=55 gal. drum, 2=4x4 liner----------	>	1	>> Reqd input for H2 calculations	
3=5x5 liner, 4=6x6 liner)				
Is container a vented HIC ? ("Yes", or "No")----------	>	No	*Note: For a vented HIC, assume	
			"Date sealed" is date shipped in Cask	
Enter date of curie calculations ----------	>	06/01/95		
Enter date last sealed*----------	>	06/01/95	>>	
Enter date to be shipped----------	>	06/01/95	>> Must be later than Ci calcs	
Enter date of shipment receipt----------	>	06/01/05		
CALCULATED Decay before sealing (years)	=	0.00	Days=	0
CALCULATED Decay before shipment (years)	=	0.00	Days=	0
CALCULATED Duration package is sealed (years)	=	10.01	Days=	3653
Enter package interior volume----------	>	31.4	Ft3	
Enter waste volume----------	>	22.1	Ft3	
CALCULATED Container void volume:		9.30	Ft3	
Enter estimated waste void volume----------	>		Ft3	
** OR **				
Enter waste true density (vendor data)----------	>	46.1	Lbs/Ft3	
CALCULATED Waste void fraction	=	-0.001		
CALCULATED Waste void volume	=	0.0	Ft3	
CALCULATED Package interior volume	=	8.892E+05	cc	
CALCULATED Waste volume	=	6.258E+05	cc	
CALCULATED Total void volume	=	2.626E+05	cc	
Enter waste weight----------	>	1020	Lbs	
CALCULATED Weight	=	4.631E+05	gms	
CALCULATED Waste bulk density	=	0.7400	gms/cc	
Enter G-H2 (molecules/100 ev)----------	>	0.50		
OR				
Enter volume cation resin (cu ft)----------	>			
Enter volume anion resin (cu ft)----------	>			
Enter volume mix bed resin (cu ft)----------	>			
Enter volume other resin (cu ft)----------	>			
Enter G-H2 of other resin----------	>			
CALCULATED G-H2 for waste	=	0.00		
*** CALCULATED RESULTS ***				

H2 Generation Summary:				
Total Integrated Dose	=	8.231E+04	Rads	
H2 Volume	=	4.441E+02	cm3	
H2 Concentration	=	0.16881	%	
H2 Generation Rate	=	5.065E-03	cc/hr	
Pressure Buildup Rate	=	6.808E-06	psi/day	
Pressure (seal to ship)	=	0.00	psi	
Enter Measured H2 Concentration (if known)----------	>	0.00	%	
Ratio Measured to Calculated H2 Concentrations	=	0.00		
Activity Summary @ Shipment:				
Total Activity*	=	3.780E-01	Ci	(*Excludes Daughters
Specific Activity, Total*	=	0.001	mCi/cc	with T 1/2 < 10 days)
Specific Activity*, T 1/2 < 5 Years	==	5.302E-01	µCi/cc	
T 1/2 > 5 Years	==	6.040E-01	µCi/cc	
Decay Heat @ Shipment:				
Decay Heat @ Shipment	=	0.002	Watts	
or		0.008	BTU/hr	
Fissile Material:				
Fissile Material (49 CFR 173 & 10 CFR 71)	==	0.000	gms	
Other DOE Fissile Material (DOE 5480.1A)		0.000	gms	>> Isotope list is incomplete
Special Nuclear Material:				
Special Nuclear Material (SNM)	==	0.000	gms	
Other DOE Accountable Material (DOE 5633.3)	==	0.000	gms	>> Isotope list is incomplete
Transuranics:				
Specific Activity, Transuranics	==	0.000	nCi/gms	
10 CFR 61.55 Classification:		Unity Fraction		Classification
Table 1 Isotopes	==	0.000	A	Class B
(Long Lived)		N/A	B	
		0.000	C	Limiting Isotope
				Sr-90
Table 2 Isotopes	==	2.398	A	
(Short Lived)		0.011	B	Miscellaneous
		0.000	C	
Transportation Classification:		Unity Fraction		
LSA Determination	==	2.311E-02	LSA	
Type Determination	==	1.543E-01	Type'A'	
Highway Route Control (HRC) Determination	==	5.143E-05	Non HRC	
Limited Quantity (LQ) Determination	==	1.543E+03	> LQ	
Advance Notification Quantity ?	==	No		
EPA Reportable Quantity (RQ) Determination	==	7.830E-01		

	INPUT: LISTED ISOTOPES				
	(**** = Daughter Product)			Curies when	Curies when
	Curies	or	%	Sealed	Shipped
Total Curies					
(ONLY if entering %) =				xxxxx	xxxxx
H-3------>				0.000E+00	0.000E+00
C-14------>				0.000E+00	0.000E+00
Na-22------>				0.000E+00	0.000E+00
Cr-51------>				0.000E+00	0.000E+00
Mn-54------>				0.000E+00	0.000E+00
Fe-55------>				0.000E+00	0.000E+00
Co-57------>				0.000E+00	0.000E+00
Co-58------>				0.000E+00	0.000E+00
Fe-59------>				0.000E+00	0.000E+00
Ni-59------>				0.000E+00	0.000E+00
Co-60------>	3.000E-02			3.000E-02	3.000E-02
Ni-63------>				0.000E+00	0.000E+00
Zn-65------>				0.000E+00	0.000E+00
Se-79------>				0.000E+00	0.000E+00
Kr-85------>				0.000E+00	0.000E+00
Sr-89------>				0.000E+00	0.000E+00
Sr-90------>	4.800E-02			4.800E-02	4.800E-02
Y-90------>	****		****	4.800E-02	4.800E-02
Y-91------>				0.000E+00	0.000E+00
Zr-93------>				0.000E+00	0.000E+00
Nb-93m------>				0.000E+00	0.000E+00
Nb-94------>				0.000E+00	0.000E+00
Zr-95------>				0.000E+00	0.000E+00
Nb-95------>				0.000E+00	0.000E+00
Nb-95m------>				0.000E+00	0.000E+00
Tc-99------>				0.000E+00	0.000E+00
Ru-103------>				0.000E+00	0.000E+00
Rh-103m------>	****		****	0.000E+00	0.000E+00
Ru-106------>				0.000E+00	0.000E+00
Rh-106------>	****		****	0.000E+00	0.000E+00
Pd-107------>				0.000E+00	0.000E+00
Cd-109------>				0.000E+00	0.000E+00
Ag-110m------>				0.000E+00	0.000E+00
Ag-110------>	****		****	0.000E+00	0.000E+00
Sn-113------>				0.000E+00	0.000E+00
In-113m------>	****		****	0.000E+00	0.000E+00
Cd-113m------>				0.000E+00	0.000E+00
Cd-115m------>				0.000E+00	0.000E+00
Sn-119m------>				0.000E+00	0.000E+00
Sn-121m------>				0.000E+00	0.000E+00
Sn-123------>				0.000E+00	0.000E+00
Te-123m------>				0.000E+00	0.000E+00
Sb-124------>				0.000E+00	0.000E+00
Sb-125------>				0.000E+00	0.000E+00
Te-125m------>				0.000E+00	0.000E+00
Sn-126------>				0.000E+00	0.000E+00
Sb-126m------>	****		****	0.000E+00	0.000E+00
Sb-126------>				0.000E+00	0.000E+00
Te-127m------>				0.000E+00	0.000E+00
Te-127------>	****		****	0.000E+00	0.000E+00
Te-129m------>				0.000E+00	0.000E+00
Te-129------>	****		****	0.000E+00	0.000E+00
I-129------>				0.000E+00	0.000E+00
I-131------>				0.000E+00	0.000E+00
Cs-134------>				0.000E+00	0.000E+00
Cs-135------>				0.000E+00	0.000E+00

	Cs-136------>				0.000E+00	0.000E+00
	Cs-137------>	3.000E-01			3.000E-01	3.000E-01
	Ba-137m----->	****		****	2.838E-01	2.838E-01
	Ba-140------>				0.000E+00	0.000E+00
	La-140------>	****		****	0.000E+00	0.000E+00
	Ce-141------>				0.000E+00	0.000E+00
	Pr-143------>				0.000E+00	0.000E+00
	Ce-144------>				0.000E+00	0.000E+00
	Pr-144------>	****		****	0.000E+00	0.000E+00
	Pr-144m------>				0.000E+00	0.000E+00
	Nd-147------>				0.000E+00	0.000E+00
	Pm-147------>				0.000E+00	0.000E+00
	Pm-148m------>				0.000E+00	0.000E+00
	Pm-148------>	****		****	0.000E+00	0.000E+00
	Sm-151------>				0.000E+00	0.000E+00
	Eu-152------>				0.000E+00	0.000E+00
	Gd-153------>				0.000E+00	0.000E+00
	Eu-154------>				0.000E+00	0.000E+00
	Eu-155------>				0.000E+00	0.000E+00
	Eu-156------>				0.000E+00	0.000E+00
	Tb-160------>				0.000E+00	0.000E+00
	Ta-182------>				0.000E+00	0.000E+00
	Ra-226------>				0.000E+00	0.000E+00
	U-233------>				0.000E+00	0.000E+00
	U-234------>				0.000E+00	0.000E+00
	U-235------>				0.000E+00	0.000E+00
	U-236------>				0.000E+00	0.000E+00
	U-237------>				0.000E+00	0.000E+00
	U-238------>				0.000E+00	0.000E+00
	Np-237------>				0.000E+00	0.000E+00
	Pu-238------>				0.000E+00	0.000E+00
	Pu-239------>				0.000E+00	0.000E+00
	Pu-240------>				0.000E+00	0.000E+00
	Pu-241------>				0.000E+00	0.000E+00
	Pu-242------>				0.000E+00	0.000E+00
	Am-241------>				0.000E+00	0.000E+00
	Am-242m----->				0.000E+00	0.000E+00
	Am-242------>	****		****	0.000E+00	0.000E+00
	Am-243------>				0.000E+00	0.000E+00
	Cm-242------>				0.000E+00	0.000E+00
	Cm-244------>				0.000E+00	0.000E+00

PROGRAM to CLASSIFY RADIOACTIVE WASTE				
CONTAINERS for TRANSPORTATION and DISPOSAL		FILE REF:	Lower 5S	
CP Deltete...Analytical Resources, Inc., 2/85 & 6/90				
(Modified for DOE Radionuclides and Thermal Wattage..		DATE:	6/9/95	
RP Genoni/JG Field..Westinghouse-Hanford Co....6/88)				
		BY:	J.R. Green	JR Green 6/9/95
Originally Published by the Electric Power Research			T.M. Kaufman	T.M. Kaufman 6/9/95
Institute in NP-4938 and NP-4757		CHECKED:	For J.E. Mercado	[illegible] 6/12/95
*** WASTE GENERAL INFORMATION ***				
Enter waste description----------	>			
" ----------	>			
" ----------	>			
Enter waste form ("Special" or "Normal")----------	>	Normal	>> Reqd input for DOT calculations	
Enter physical form ("Solid", "Liquid" or "Gas")----------	>	Liquid	>> Reqd input for DOT calculations	
Is waste Activated Metal ? ("Yes", or "No")----------	>	No	>> Reqd input for 10CFR61 calculations	
Enter container type (1=55 gal. drum, 2=4x4 liner----------	>	1	>> Reqd input for H2 calculations	
3=5x5 liner, 4=6x6 liner)				
Is container a vented HIC ? ("Yes", or "No")----------	>	No	*Note: For a vented HIC, assume	
			"Date sealed" is date shipped in Cask	
Enter date of curie calculations ----------	>	06/01/95		
Enter date last sealed*----------	>	06/01/95	>>	
Enter date to be shipped----------	>	06/01/95	>> Must be later than Ci calcs	
Enter date of shipment receipt----------	>	06/01/05		
CALCULATED Decay before sealing (years)	=	0.00	Days=	0
CALCULATED Decay before shipment (years)	=	0.00	Days=	0
CALCULATED Duration package is sealed (years)	=	10.01	Days=	3653
Enter package interior volume----------	>	10.5	Ft3	
Enter waste volume----------	>	7.9	Ft3	
CALCULATED Container void volume:		2.57	Ft3	
Enter estimated waste void volume----------	>		Ft3	
** OR **				
Enter waste true density (vendor data)----------	>	46.1	Lbs/Ft3	
CALCULATED Waste void fraction	=	-0.002		
CALCULATED Waste void volume	=	0.0	Ft3	
CALCULATED Package interior volume	=	2.965E+05	cc	
CALCULATED Waste volume	=	2.237E+05	cc	
CALCULATED Total void volume	=	7.227E+04	cc	
Enter waste weight----------	>	365	Lbs	
CALCULATED Weight	=	1.657E+05	gms	
CALCULATED Waste bulk density	=	0.7408	gms/cc	
Enter G-H2 (molecules/100 ev)----------	>	0.50		
OR				
Enter volume cation resin (cu ft)----------	>			
Enter volume anion resin (cu ft)----------	>			
Enter volume mix bed resin (cu ft)----------	>			
Enter volume other resin (cu ft)----------	>			
Enter G-H2 of other resin----------	>			
CALCULATED G-H2 for waste	=	0.00		

*** CALCULATED RESULTS ***				
H2 Generation Summary:				
Total Integrated Dose	=	7.840E+04	Rads	
H2 Volume	=	1.514E+02	cm3	
H2 Concentration	=	0.20898	%*	
H2 Generation Rate	=	1.726E-03	cc/hr	
Pressure Buildup Rate	=	8.432E-06	psi/day	
Pressure (seal to ship)	=	0.00	psi	
Enter Measured H2 Concentration (if known)----------	>	0.00	%	
Ratio Measured to Calculated H2 Concentrations	=	0.00		
Activity Summary @ Shipment:				
Total Activity*	=	1.053E-01	Ci	(*Excludes Daughters
Specific Activity, Total*	=	0.000	mCi/cc	with T 1/2 < 10 days)
Specific Activity*, T 1/2 < 5 Years	===	2.272E-02	µCi/cc	
T 1/2 > 5 Years	===	4.708E-01	µCi/cc	
Decay Heat @ Shipment:				
Decay Heat @ Shipment	=	0.002	Watts	
or		0.005	BTU/hr	
Fissile Material:				
Fissile Material (49 CFR 173 & 10 CFR 71)	===	0.000	gms	
Other DOE Fissile Material (DOE 5480.1A)		0.000	gms >> Isotope list is incomplete	
Special Nuclear Material:				
Special Nuclear Material (SNM)	===	0.000	gms	
Other DOE Accountable Material (DOE 5633.3)	===	0.000	gms >> Isotope list is incomplete	
Transuranics:				
Specific Activity, Transuranics	===	0.000	nCi/gms	
10 CFR 61.55 Classification:		Unity Fraction		Classification
Table 1 Isotopes	===	0.000	A	Class A
(Long Lived)		N/A	B	
		0.000	C	Limiting Isotope
				Sr-90
Table 2 Isotopes	===	0.103	A	
(Short Lived)		0.000	B	Miscellaneous
		0.000	C	
Transportation Classification:		Unity Fraction		
LSA Determination	===	2.985E-03	LSA	
Type Determination	===	1.657E-02	Type'A'	
Highway Route Control (HRC) Determination	===	5.524E-06	Non HRC	
Limited Quantity (LQ) Determination	===	1.657E+02	> LQ	
Advance Notification Quantity ?	===	No		
EPA Reportable Quantity (RQ) Determination	===	2.190E-02		

	INPUT: LISTED ISOTOPES				
	(**** = Daughter Product)			Curies when	Curies when
		Curies	or	%	Sealed	Shipped
	Total Curies				
		(ONLY if entering %) =			xxxxx	xxxxx
	H-3---->				0.000E+00	0.000E+00
	C-14---->				0.000E+00	0.000E+00
	Na-22---->				0.000E+00	0.000E+00
	Cr-51---->				0.000E+00	0.000E+00
	Mn-54---->				0.000E+00	0.000E+00
	Fe-55---->				0.000E+00	0.000E+00
	Co-57---->				0.000E+00	0.000E+00
	Co-58---->				0.000E+00	0.000E+00
	Fe-59---->				0.000E+00	0.000E+00
	Ni-59---->				0.000E+00	0.000E+00
	Co-60---->	1.000E-01			1.000E-01	1.000E-01
	Ni-63---->				0.000E+00	0.000E+00
	Zn-65---->				0.000E+00	0.000E+00
	Se-79---->				0.000E+00	0.000E+00
	Kr-85---->				0.000E+00	0.000E+00
	Sr-89---->				0.000E+00	0.000E+00
	Sr-90---->	7.300E-04			7.300E-04	7.300E-04
	Y-90---->	****		****	7.300E-04	7.300E-04
	Y-91---->				0.000E+00	0.000E+00
	Zr-93---->				0.000E+00	0.000E+00
	Nb-93m---->				0.000E+00	0.000E+00
	Nb-94---->				0.000E+00	0.000E+00
	Zr-95---->				0.000E+00	0.000E+00
	Nb-95---->				0.000E+00	0.000E+00
	Nb-95m---->				0.000E+00	0.000E+00
	Tc-99---->				0.000E+00	0.000E+00
	Ru-103---->				0.000E+00	0.000E+00
	Rh-103m---->	****		****	0.000E+00	0.000E+00
	Ru-106---->				0.000E+00	0.000E+00
	Rh-106---->	****		****	0.000E+00	0.000E+00
	Pd-107---->				0.000E+00	0.000E+00
	Cd-109---->				0.000E+00	0.000E+00
	Ag-110m---->				0.000E+00	0.000E+00
	Ag-110---->	****		****	0.000E+00	0.000E+00
	Sn-113---->				0.000E+00	0.000E+00
	In-113m---->	****		****	0.000E+00	0.000E+00
	Cd-113m---->				0.000E+00	0.000E+00
	Cd-115m---->				0.000E+00	0.000E+00
	Sn-119m---->				0.000E+00	0.000E+00
	Sn-121m---->				0.000E+00	0.000E+00
	Sn-123---->				0.000E+00	0.000E+00
	Te-123m---->				0.000E+00	0.000E+00
	Sb-124---->				0.000E+00	0.000E+00
	Sb-125---->				0.000E+00	0.000E+00
	Te-125m---->				0.000E+00	0.000E+00
	Sn-126---->				0.000E+00	0.000E+00
	Sb-126m---->	****		****	0.000E+00	0.000E+00
	Sb-126---->				0.000E+00	0.000E+00
	Te-127m---->				0.000E+00	0.000E+00
	Te-127---->	****		****	0.000E+00	0.000E+00
	Te-129m---->				0.000E+00	0.000E+00
	Te-129---->	****		****	0.000E+00	0.000E+00
	I-129---->				0.000E+00	0.000E+00
	I-131---->				0.000E+00	0.000E+00

	Cs-134----->				0.000E+00	0.000E+00
	Cs-135----->				0.000E+00	0.000E+00
	Cs-136----->				0.000E+00	0.000E+00
	Cs-137----->	4.600E-03			4.600E-03	4.600E-03
	Ba-137m----->	****		****	4.352E-03	4.352E-03
	Ba-140----->				0.000E+00	0.000E+00
	La-140----->	****		****	0.000E+00	0.000E+00
	Ce-141----->				0.000E+00	0.000E+00
	Pr-143----->				0.000E+00	0.000E+00
	Ce-144----->				0.000E+00	0.000E+00
	Pr-144----->	****		****	0.000E+00	0.000E+00
	Pr-144m----->				0.000E+00	0.000E+00
	Nd-147----->				0.000E+00	0.000E+00
	Pm-147----->				0.000E+00	0.000E+00
	Pm-148m----->				0.000E+00	0.000E+00
	Pm-148----->	****		****	0.000E+00	0.000E+00
	Sm-151----->				0.000E+00	0.000E+00
	Eu-152----->				0.000E+00	0.000E+00
	Gd-153----->				0.000E+00	0.000E+00
	Eu-154----->				0.000E+00	0.000E+00
	Eu-155----->				0.000E+00	0.000E+00
	Eu-156----->				0.000E+00	0.000E+00
	Tb-160----->				0.000E+00	0.000E+00
	Ta-182----->				0.000E+00	0.000E+00
	Ra-226----->				0.000E+00	0.000E+00
	U-233----->				0.000E+00	0.000E+00
	U-234----->				0.000E+00	0.000E+00
	U-235----->				0.000E+00	0.000E+00
	U-236----->				0.000E+00	0.000E+00
	U-237----->				0.000E+00	0.000E+00
	U-238----->				0.000E+00	0.000E+00
	Np-237----->				0.000E+00	0.000E+00
	Pu-238----->				0.000E+00	0.000E+00
	Pu-239----->				0.000E+00	0.000E+00
	Pu-240----->				0.000E+00	0.000E+00
	Pu-241----->				0.000E+00	0.000E+00
	Pu-242----->				0.000E+00	0.000E+00
	Am-241----->				0.000E+00	0.000E+00
	Am-242m----->				0.000E+00	0.000E+00
	Am-242----->	****		****	0.000E+00	0.000E+00
	Am-243----->				0.000E+00	0.000E+00
	Cm-242----->				0.000E+00	0.000E+00
	Cm-244----->				0.000E+00	0.000E+00

PROGRAM to CLASSIFY RADIOACTIVE WASTE				
CONTAINERS for TRANSPORTATION and DISPOSAL		FILE REF:	Lower 6S	
CP Deltete...Analytical Resources, Inc., 2/85 & 6/90				
(Modified for DOE Radionuclides and Thermal Wattage..		DATE:	6/1/95	
RP Genoni/JG Field..Westinghouse-Hanford Co....6/88)				
		BY:	J.R. Green	J.R. Green 6/5/95
Originally Published by the Electric Power Research			T.M. Kaufman	T.M. Kaufman 6/5/95
Institute in NP-4938 and NP-4757		CHECKED:	J.E. Mercado	J.E. Mercado 6/6/95
*** WASTE GENERAL INFORMATION ***				
Enter waste description----------	>			
" ----------	>			
" ----------	>			
Enter waste form ("Special" or "Normal")----------	>	Normal	>> Reqd input for DOT calculations	
Enter physical form ("Solid", "Liquid" or "Gas")----------	>	Liquid	>> Reqd input for DOT calculations	
Is waste Activated Metal ? ("Yes", or "No")----------	>	No	>> Reqd input for 10CFR61 calculation	
Enter container type (1=55 gal. drum, 2=4x4 liner----------	>	1	>> Reqd input for H2 calculations	
3=5x5 liner, 4=6x6 liner)				
Is container a vented HIC ? ("Yes", or "No")----------	>	No	*Note: For a vented HIC, assume	
			"Date sealed" is date shipped in Cask	
Enter date of curie calculations ----------	>	06/01/95		
Enter date last sealed*----------	>	06/01/95	>>	
Enter date to be shipped----------	>	06/01/95	>> Must be later than Ci calcs	
Enter date of shipment receipt----------	>	06/01/05		
CALCULATED Decay before sealing (years)	=	0.00	Days=	0
CALCULATED Decay before shipment (years)	=	0.00	Days=	0
CALCULATED Duration package is sealed (years)	=	10.01	Days=	3653
Enter package interior volume----------	>	31.4	Ft3	
Enter waste volume----------	>	22.1	Ft3	
CALCULATED Container void volume:		9.30	Ft3	
Enter estimated waste void volume----------	>		Ft3	
** OR **				
Enter waste true density (vendor data)----------	>	46.1	Lbs/Ft3	
CALCULATED Waste void fraction	=	-0.001		
CALCULATED Waste void volume	=	0.0	Ft3	
CALCULATED Package interior volume	=	8.892E+05	cc	
CALCULATED Waste volume	=	6.258E+05	cc	
CALCULATED Total void volume	=	2.626E+05	cc	
Enter waste weight----------	>	1020	Lbs	
CALCULATED Weight	=	4.631E+05	gms	
CALCULATED Waste bulk density	=	0.7400	gms/cc	
Enter G-H2 (molecules/100 ev)----------	>	0.50		
OR				
Enter volume cation resin (cu ft)----------	>			
Enter volume anion resin (cu ft)----------	>			
Enter volume mix bed resin (cu ft)----------	>			
Enter volume other resin (cu ft)----------	>			
Enter G-H2 of other resin----------	>			
CALCULATED G-H2 for waste	=	0.00		
*** CALCULATED RESULTS ***				

H2 Generation Summary:				
Total Integrated Dose	=	2.502E+04	Rads	
H2 Volume	=	1.350E+02	cm3	
H2 Concentration	=	0.05136	%	
H2 Generation Rate	=	1.539E-03	cc/hr	
Pressure Buildup Rate	=	2.069E-06	psi/day	
Pressure (seal to ship)	=	0.00	psi	
Enter Measured H2 Concentration (if known)----------	>	0.00	%	
Ratio Measured to Calculated H2 Concentrations	=	0.00		
Activity Summary @ Shipment:				
Total Activity*	=	1.170E-01	Ci	(*Excludes Daughters
Specific Activity, Total*	=	0.000	mCi/cc	with T 1/2 < 10 days)
Specific Activity*, T 1/2 < 5 Years	==	1.767E-01	µCi/cc	
T 1/2 > 5 Years	==	1.870E-01	µCi/cc	
Decay Heat @ Shipment:				
Decay Heat @ Shipment	=	0.001	Watts	
or		0.002	BTU/hr	
Fissile Material:				
Fissile Material (49 CFR 173 & 10 CFR 71)	==	0.000	gms	
Other DOE Fissile Material (DOE 5480.1A)		0.000	gms >> Isotope list is incomplete	
Special Nuclear Material:				
Special Nuclear Material (SNM)	==	0.000	gms	
Other DOE Accountable Material (DOE 5633.3)	==	0.000	gms >> Isotope list is incomplete	
Transuranics:				
Specific Activity, Transuranics	==	0.000	nCi/gms	
10 CFR 61.55 Classification:		Unity Fraction		Classification
Table 1 Isotopes	==	0.000	A	Class A
(Long Lived)		N/A	B	
		0.000	C	Limiting Isotope
				Sr-90
Table 2 Isotopes	==	0.799	A	
(Short Lived)		0.004	B	Miscellaneous
		0.000	C	
Transportation Classification:		Unity Fraction		
LSA Determination	==	7.637E-03	LSA	
Type Determination	==	5.014E-02	Type'A'	
Highway Route Control (HRC) Determination	==	1.671E-05	Non HRC	
Limited Quantity (LQ) Determination	==	5.014E+02	> LQ	
Advance Notification Quantity ?	==	No		
EPA Reportable Quantity (RQ) Determination	==	2.601E-01		

	INPUT: LISTED ISOTOPES				
	(**** = Daughter Product)			Curies when	Curies when
		Curies	or	%	Sealed	Shipped
	Total Curies					
	(ONLY if entering %) =				xxxxx	xxxxx
	H-3----->				0.000E+00	0.000E+00
	C-14----->				0.000E+00	0.000E+00
	Na-22----->				0.000E+00	0.000E+00
	Cr-51----->				0.000E+00	0.000E+00
	Mn-54----->				0.000E+00	0.000E+00
	Fe-55----->				0.000E+00	0.000E+00
	Co-57----->				0.000E+00	0.000E+00
	Co-58----->				0.000E+00	0.000E+00
	Fe-59----->				0.000E+00	0.000E+00
	Ni-59----->				0.000E+00	0.000E+00
	Co-60----->	1.000E-03			1.000E-03	1.000E-03
	Ni-63----->				0.000E+00	0.000E+00
	Zn-65----->				0.000E+00	0.000E+00
	Se-79----->				0.000E+00	0.000E+00
	Kr-85----->				0.000E+00	0.000E+00
	Sr-89----->				0.000E+00	0.000E+00
	Sr-90----->	1.600E-02			1.600E-02	1.600E-02
	Y-90----->	****		****	1.600E-02	1.600E-02
	Y-91----->				0.000E+00	0.000E+00
	Zr-93----->				0.000E+00	0.000E+00
	Nb-93m----->				0.000E+00	0.000E+00
	Nb-94----->				0.000E+00	0.000E+00
	Zr-95----->				0.000E+00	0.000E+00
	Nb-95----->				0.000E+00	0.000E+00
	Nb-95m----->				0.000E+00	0.000E+00
	Tc-99----->				0.000E+00	0.000E+00
	Ru-103----->				0.000E+00	0.000E+00
	Rh-103m----->	****		****	0.000E+00	0.000E+00
	Ru-106----->				0.000E+00	0.000E+00
	Rh-106----->	****		****	0.000E+00	0.000E+00
	Pd-107----->				0.000E+00	0.000E+00
	Cd-109----->				0.000E+00	0.000E+00
	Ag-110m----->				0.000E+00	0.000E+00
	Ag-110----->	****		****	0.000E+00	0.000E+00
	Sn-113----->				0.000E+00	0.000E+00
	In-113m----->	****		****	0.000E+00	0.000E+00
	Cd-113m----->				0.000E+00	0.000E+00
	Cd-115m----->				0.000E+00	0.000E+00
	Sn-119m----->				0.000E+00	0.000E+00
	Sn-121m----->				0.000E+00	0.000E+00
	Sn-123----->				0.000E+00	0.000E+00
	Te-123m----->				0.000E+00	0.000E+00
	Sb-124----->				0.000E+00	0.000E+00
	Sb-125----->				0.000E+00	0.000E+00
	Te-125m----->				0.000E+00	0.000E+00
	Sn-126----->				0.000E+00	0.000E+00
	Sb-126m----->	****		****	0.000E+00	0.000E+00
	Sb-126----->				0.000E+00	0.000E+00
	Te-127m----->				0.000E+00	0.000E+00
	Te-127----->	****		****	0.000E+00	0.000E+00
	Te-129m----->				0.000E+00	0.000E+00
	Te-129----->	****		****	0.000E+00	0.000E+00
	I-129----->				0.000E+00	0.000E+00
	I-131----->				0.000E+00	0.000E+00
	Cs-134----->				0.000E+00	0.000E+00
	Cs-135----->				0.000E+00	0.000E+00

	Cs-136------>				0.000E+00	0.000E+00
	Cs-137------>	1.000E-01			1.000E-01	1.000E-01
	Ba-137m----->	****		****	9.460E-02	9.460E-02
	Ba-140------>				0.000E+00	0.000E+00
	La-140------>	****		****	0.000E+00	0.000E+00
	Ce-141------>				0.000E+00	0.000E+00
	Pr-143------>				0.000E+00	0.000E+00
	Ce-144------>				0.000E+00	0.000E+00
	Pr-144------>	****		****	0.000E+00	0.000E+00
	Pr-144m------>				0.000E+00	0.000E+00
	Nd-147------>				0.000E+00	0.000E+00
	Pm-147------>				0.000E+00	0.000E+00
	Pm-148m------>				0.000E+00	0.000E+00
	Pm-148------>	****		****	0.000E+00	0.000E+00
	Sm-151------>				0.000E+00	0.000E+00
	Eu-152------>				0.000E+00	0.000E+00
	Gd-153------>				0.000E+00	0.000E+00
	Eu-154------>				0.000E+00	0.000E+00
	Eu-155------>				0.000E+00	0.000E+00
	Eu-156------>				0.000E+00	0.000E+00
	Tb-160------>				0.000E+00	0.000E+00
	Ta-182------>				0.000E+00	0.000E+00
	Ra-226------>				0.000E+00	0.000E+00
	U-233------>				0.000E+00	0.000E+00
	U-234------>				0.000E+00	0.000E+00
	U-235------>				0.000E+00	0.000E+00
	U-236------>				0.000E+00	0.000E+00
	U-237------>				0.000E+00	0.000E+00
	U-238------>				0.000E+00	0.000E+00
	Np-237------>				0.000E+00	0.000E+00
	Pu-238------>				0.000E+00	0.000E+00
	Pu-239------>				0.000E+00	0.000E+00
	Pu-240------>				0.000E+00	0.000E+00
	Pu-241------>				0.000E+00	0.000E+00
	Pu-242------>				0.000E+00	0.000E+00
	Am-241------>				0.000E+00	0.000E+00
	Am-242m----->				0.000E+00	0.000E+00
	Am-242------>	****		****	0.000E+00	0.000E+00
	Am-243------>				0.000E+00	0.000E+00
	Cm-242------>				0.000E+00	0.000E+00
	Cm-244------>				0.000E+00	0.000E+00

PROGRAM to CLASSIFY RADIOACTIVE WASTE				
CONTAINERS for TRANSPORTATION and DISPOSAL		FILE REF:	Lower 7S	
CP Deltete...Analytical Resources, Inc., 2/85 & 6/90				
(Modified for DOE Radionuclides and Thermal Wattage..		DATE:	6/9/95	
RP Genoni/JG Field..Westinghouse-Hanford Co....6/88)				
		BY:	J.R. Green	J.R. Green 6/9/95
Originally Published by the Electric Power Research			T.M. Kaufman	T.M. Kaufman 6/9/95
Institute in NP-4938 and NP-4757		CHECKED: FOR	J.E. Mercado	6/12/95
*** WASTE GENERAL INFORMATION ***				
Enter waste description----------	>			
" ----------	>			
" ----------	>			
Enter waste form ("Special" or "Normal")----------	>	Normal	>> Reqd input for DOT calculations	
Enter physical form ("Solid", "Liquid" or "Gas")----------	>	Liquid	>> Reqd input for DOT calculations	
Is waste Activated Metal ? ("Yes", or "No")----------	>	No	>> Reqd input for 10CFR61 calculations	
Enter container type (1=55 gal. drum, 2=4x4 liner----------	>	1	>> Reqd input for H2 calculations	
3=5x5 liner, 4=6x6 liner)				
Is container a vented HIC ? ("Yes", or "No")----------	>	No	*Note: For a vented HIC, assume	
			"Date sealed" is date shipped in Cask	
Enter date of curie calculations ----------	>	06/01/95		
Enter date last sealed*----------	>	06/01/95	>>	
Enter date to be shipped----------	>	06/01/95	>> Must be later than Ci calcs	
Enter date of shipment receipt----------	>	06/01/05		
CALCULATED Decay before sealing (years)	=	0.00	Days=	0
CALCULATED Decay before shipment (years)	=	0.00	Days=	0
CALCULATED Duration package is sealed (years)	=	10.01	Days=	3653
Enter package interior volume----------	>	31.4	Ft3	
Enter waste volume----------	>	22.1	Ft3	
CALCULATED Container void volume:		9.30	Ft3	
Enter estimated waste void volume----------	>		Ft3	
** OR **				
Enter waste true density (vendor data)----------	>	46.1	Lbs/Ft3	
CALCULATED Waste void fraction	=	-0.001		
CALCULATED Waste void volume	=	0.0	Ft3	
CALCULATED Package interior volume	=	8.892E+05	cc	
CALCULATED Waste volume	=	6.258E+05	cc	
CALCULATED Total void volume	=	2.626E+05	cc	
Enter waste weight----------	>	1020	Lbs	
CALCULATED Weight	=	4.631E+05	gms	
CALCULATED Waste bulk density	=	0.7400	gms/cc	
Enter G-H2 (molecules/100 ev)----------	>	0.50		
OR				
Enter volume cation resin (cu ft)----------	>			
Enter volume anion resin (cu ft)----------	>			
Enter volume mix bed resin (cu ft)----------	>			
Enter volume other resin (cu ft)----------	>			
Enter G-H2 of other resin----------	>			
CALCULATED G-H2 for waste	=	0.00		

*** CALCULATED RESULTS ***				
H2 Generation Summary:				
Total Integrated Dose	=	1.289E+04	Rads	
H2 Volume	=	6.954E+01	cm3	
H2 Concentration	=	0.02647	%	
H2 Generation Rate	=	7.932E-04	cc/hr	
Pressure Buildup Rate	=	1.066E-06	psi/day	
Pressure (seal to ship)	=	0.00	psi	
Enter Measured H2 Concentration (if known)----------	>	0.00	%	
Ratio Measured to Calculated H2 Concentrations	=	0.00		
Activity Summary @ Shipment:				
Total Activity*	=	6.041E-02	Ci	(*Excludes Daughters
Specific Activity, Total*	=	0.000	mCi/cc	with T 1/2 < 10 days)
Specific Activity*, T 1/2 < 5 Years	===	9.187E-02	µCi/cc	
T 1/2 > 5 Years	===	9.653E-02	µCi/cc	
Decay Heat @ Shipment:				
Decay Heat @ Shipment	=	0.000	Watts	
or		0.001	BTU/hr	
Fissile Material:				
Fissile Material (49 CFR 173 & 10 CFR 71)	===	0.000	gms	
Other DOE Fissile Material (DOE 5480.1A)		0.000	gms	>> Isotope list is incomplete
Special Nuclear Material:				
Special Nuclear Material (SNM)	===	0.000	gms	
Other DOE Accountable Material (DOE 5633.3)	===	0.000	gms	>> Isotope list is incomplete
Transuranics:				
Specific Activity, Transuranics	===	0.000	nCi/gms	
10 CFR 61.55 Classification:		Unity Fraction		Classification
Table 1 Isotopes	===	0.000	A	Class A
(Long Lived)		N/A	B	
		0.000	C	Limiting Isotope
				Sr-90
Table 2 Isotopes	===	0.415	A	
(Short Lived)		0.002	B	Miscellaneous
		0.000	C	
Transportation Classification:		Unity Fraction		
LSA Determination	===	3.960E-03	LSA	
Type Determination	===	2.597E-02	Type'A'	
Highway Route Control (HRC) Determination	===	8.655E-06	Non HRC	
Limited Quantity (LQ) Determination	===	2.597E+02	> LQ	
Advance Notification Quantity ?	===	No		
EPA Reportable Quantity (RQ) Determination	===	1.350E-01		

	INPUT: LISTED ISOTOPES					
	(**** = Daughter Product)				Curies when	Curies when
		Curies	or	%	Sealed	Shipped
	Total Curies					
	(ONLY if entering %) =				xxxxx	xxxxx
	H-3——>				0.000E+00	0.000E+00
	C-14——>				0.000E+00	0.000E+00
	Na-22——>				0.000E+00	0.000E+00
	Cr-51——>				0.000E+00	0.000E+00
	Mn-54——>				0.000E+00	0.000E+00
	Fe-55——>				0.000E+00	0.000E+00
	Co-57——>				0.000E+00	0.000E+00
	Co-58——>				0.000E+00	0.000E+00
	Fe-59——>				0.000E+00	0.000E+00
	Ni-59——>				0.000E+00	0.000E+00
	Co-60——>	1.100E-04			1.100E-04	1.100E-04
	Ni-63——>				0.000E+00	0.000E+00
	Zn-65——>				0.000E+00	0.000E+00
	Se-79——>				0.000E+00	0.000E+00
	Kr-85——>				0.000E+00	0.000E+00
	Sr-89——>				0.000E+00	0.000E+00
	Sr-90——>	8.300E-03			8.300E-03	8.300E-03
	Y-90——>	****		****	8.300E-03	8.300E-03
	Y-91——>				0.000E+00	0.000E+00
	Zr-93——>				0.000E+00	0.000E+00
	Nb-93m——>				0.000E+00	0.000E+00
	Nb-94——>				0.000E+00	0.000E+00
	Zr-95——>				0.000E+00	0.000E+00
	Nb-95——>				0.000E+00	0.000E+00
	Nb-95m——>				0.000E+00	0.000E+00
	Tc-99——>				0.000E+00	0.000E+00
	Ru-103——>				0.000E+00	0.000E+00
	Rh-103m——>	****		****	0.000E+00	0.000E+00
	Ru-106——>				0.000E+00	0.000E+00
	Rh-106——>	****		****	0.000E+00	0.000E+00
	Pd-107——>				0.000E+00	0.000E+00
	Cd-109——>				0.000E+00	0.000E+00
	Ag-110m——>				0.000E+00	0.000E+00
	Ag-110——>	****		****	0.000E+00	0.000E+00
	Sn-113——>				0.000E+00	0.000E+00
	In-113m——>	****		****	0.000E+00	0.000E+00
	Cd-113m——>				0.000E+00	0.000E+00
	Cd-115m——>				0.000E+00	0.000E+00
	Sn-119m——>				0.000E+00	0.000E+00
	Sn-121m——>				0.000E+00	0.000E+00
	Sn-123——>				0.000E+00	0.000E+00
	Te-123m——>				0.000E+00	0.000E+00
	Sb-124——>				0.000E+00	0.000E+00
	Sb-125——>				0.000E+00	0.000E+00
	Te-125m——>				0.000E+00	0.000E+00
	Sn-126——>				0.000E+00	0.000E+00
	Sb-126m——>	****		****	0.000E+00	0.000E+00
	Sb-126——>				0.000E+00	0.000E+00
	Te-127m——>				0.000E+00	0.000E+00
	Te-127——>	****		****	0.000E+00	0.000E+00
	Te-129m——>				0.000E+00	0.000E+00
	Te-129——>	****		****	0.000E+00	0.000E+00
	I-129——>				0.000E+00	0.000E+00
	I-131——>				0.000E+00	0.000E+00

	Cs-134----->				0.000E+00	0.000E+00
	Cs-135----->				0.000E+00	0.000E+00
	Cs-136----->				0.000E+00	0.000E+00
	Cs-137----->	5.200E-02			5.200E-02	5.200E-02
	Ba-137m----->	****		****	4.919E-02	4.919E-02
	Ba-140----->				0.000E+00	0.000E+00
	La-140----->	****		****	0.000E+00	0.000E+00
	Ce-141----->				0.000E+00	0.000E+00
	Pr-143----->				0.000E+00	0.000E+00
	Ce-144----->				0.000E+00	0.000E+00
	Pr-144----->	****		****	0.000E+00	0.000E+00
	Pr-144m----->				0.000E+00	0.000E+00
	Nd-147----->				0.000E+00	0.000E+00
	Pm-147----->				0.000E+00	0.000E+00
	Pm-148m----->				0.000E+00	0.000E+00
	Pm-148----->	****		****	0.000E+00	0.000E+00
	Sm-151----->				0.000E+00	0.000E+00
	Eu-152----->				0.000E+00	0.000E+00
	Gd-153----->				0.000E+00	0.000E+00
	Eu-154----->				0.000E+00	0.000E+00
	Eu-155----->				0.000E+00	0.000E+00
	Eu-156----->				0.000E+00	0.000E+00
	Tb-160----->				0.000E+00	0.000E+00
	Ta-182----->				0.000E+00	0.000E+00
	Ra-226----->				0.000E+00	0.000E+00
	U-233----->				0.000E+00	0.000E+00
	U-234----->				0.000E+00	0.000E+00
	U-235----->				0.000E+00	0.000E+00
	U-236----->				0.000E+00	0.000E+00
	U-237----->				0.000E+00	0.000E+00
	U-238----->				0.000E+00	0.000E+00
	Np-237----->				0.000E+00	0.000E+00
	Pu-238----->	2.000E-12			2.000E-12	2.000E-12
	Pu-239----->	2.000E-12			2.000E-12	2.000E-12
	Pu-240----->	2.000E-12			2.000E-12	2.000E-12
	Pu-241----->	2.000E-12			2.000E-12	2.000E-12
	Pu-242----->	2.000E-12			2.000E-12	2.000E-12
	Am-241----->	2.000E-12			2.000E-12	2.000E-12
	Am-242m----->				0.000E+00	0.000E+00
	Am-242----->	****		****	0.000E+00	0.000E+00
	Am-243----->				0.000E+00	0.000E+00
	Cm-242----->				0.000E+00	0.000E+00
	Cm-244----->				0.000E+00	0.000E+00

THIS PAGE INTENTIONALLY
LEFT BLANK

8.0 PACKAGE TIEDOWN SYSTEM EVALUATION

8.1 SYSTEM DESIGN

The six nylon straps and fasteners used to tie down the metal boxes to the trailer shall meet the requirements of 49 CFR 393.102, "Tiedown Assemblies." Bracing will include I beams chained to the trailer, with one I beam on each of the four linear sides of the boxes for added stability to help prevent the load from shifting forward or backward or side to side on the trailer during transfer. However, credit for compliance to DOT Regulations will be taken primarily from the use of the six 12,000-lb-rated nylon straps.

8.2 ATTACHMENTS AND RATINGS

The number of tiedowns (i.e., nylon straps) is determined as follows:

Given: N_t = (Load) (0.5)/Working Load Limit (WLL) of Straps

- Box containing three columns:

  24,900 lb x 0.5/12,000 = 1.0375 rounded up to 2 (2 straps used)

- Box containing four columns:

  21,700 lb x 0.5/12,000 = 0.904 rounded up to 1 (2 straps used)

- Box containing five columns:

  8,230 lb x 0.5/12,000 = 0.3429 rounded up to 1 (2 straps used).

In conclusion, based on the WLL of the straps and the number of straps used per box, the tiedown system used for transfer is acceptable and meets DOT requirements set forth in 49 CFR 393.102.

THIS PAGE INTENTIONALLY
LEFT BLANK

9.0 REFERENCES

10 CFR 71, "Energy," *Code of Federal Regulations*, as amended.

49 CFR 173, "Transportation," *Code of Federal Regulations*, Subpart I, and 178.350.

49 CFR 393.102, "Tiedown Assemblies," *Code of Federal Regulations*, as amended.

Capital Industries, Inc., *Container Certification Analysis for Part Number S 0600 0600 0104*, Capital Industries, Inc., Seattle, Washington.

RL, 1994, *Hanford Site Radiological Control Manual*, HSRC-1, U.S. Department of Energy, Richland Operations Office, Richland, Washington.

WHC, *High-Integrity Container, 300 Year*, HS-V-P-0036, Westinghouse Hanford Company, Richland, Washington.

THIS PAGE INTENTIONALLY
LEFT BLANK