LBL-38321
UC-412

Lawrence Berkeley Laboratory
UNIVERSITY OF CALIFORNIA

[illegible] submitted to the U.S. Department of Energy

[illegible] Development for a Neutrino Astrophysical Observatory

[illegible] H.L. Crawford, P.W. Gorham, Y.D. He, S. Jackson, [illegible] J.G. Learned, J. Ling, D. Liu, D. Lowder, S. Matsuno, [illegible] D.R. Nygren, P.B. Price, A. Richards, G. Shapiro, [illegible] J. Stenger, R. Stokstad, G. VanDalen, J. Wilkes, F. Wright, [illegible]

[illegible]

NPA

Institute for Nuclear and Particle Astrophysics
Nuclear Science and Physics Divisions

Prepared for the U.S. Department of Energy under Contract Number DE-AC03-76SF00098

DISCLAIMER

This document was prepared as an account of work sponsored by the United States Government. While this document is believed to contain correct information, neither the United States Government nor any agency thereof, nor The Regents of the University of California, nor any of their employees, makes any warranty, express or implied, or assumes any legal responsibility for the accuracy, completeness, or usefulness of any information, apparatus, product, or process disclosed, or represents that its use would not infringe privately owned rights. Reference herein to any specific commercial product, process, or service by its trade name, trademark, manufacturer, or otherwise, does not necessarily constitute or imply its endorsement, recommendation, or favoring by the United States Government or any agency thereof, or The Regents of the University of California. The views and opinions of authors expressed herein do not necessarily state or reflect those of the United States Government or any agency thereof, or The Regents of the University of California.

Available to DOE and DOE Contractors
from the Office of Scientific and Technical Information
P.O. Box 62, Oak Ridge, TN 37831
Prices available from (615) 576-8401

Available to the public from the
National Technical Information Service
U.S. Department of Commerce
5285 Port Royal Road, Springfield, VA 22161

Ernest Orlando Lawrence Berkeley National Laboratory
is an equal opportunity employer.

LBL-38321
UC-412

Technology Development for a Neutrino Astrophysical Observatory

Letter of Intent

February 7, 1996

Abstract

We propose a set of technology developments relevant to the design of an optimized Čerenkov detector for the study of neutrino interactions of astrophysical interest. Emphasis is placed on signal processing innovations that enhance significantly the quality of primary data. These technical advances, combined with field experience from a follow-on test deployment, are intended to provide a basis for the engineering design for a kilometer-scale Neutrino Astrophysical Observatory.

MASTER

This work was supported by the Director, Office of Energy Research, Office of High Energy and Nuclear Physics, Division of High Energy Physics, of the U.S. Department of Energy under Contract No. DE-AC03-76SF00098.

DISTRIBUTION OF THIS DOCUMENT IS UNLIMITED BS

Recycled Paper

Members of the Collaboration

V. Chaloupka[1], T. Cole[2], H. J. Crawford[3,5,6], P. W. Gorham[9], Y. D. He[5,6,7], S. Jackson[2], S. Kleinfelder[4], K. W. Lai[2,8], J. G. Learned[9], J. Ling[2], D. Liu[2], D. Lowder[5,7], S. Matsuno[9], M. Moorhead[5,6], J. M. Morookian[2], D. R. Nygren[5,10], P. B. Price[6,7], A. Richards[5,7], G. Shapiro[5,7,10], B. Shen[11], G. Smoot[5,7,10], V. J. Stenger[9], R. Stokstad[5,6], G. VanDalen[11], J. Wilkes[1], F. Wright[2], K. Young[1]

1 Department of Physics, University of Washington, Seattle, WA 98195

2 Jet Propulsion Laboratory, California Institute of Technology, Pasadena, CA 91109

3 Space Sciences Laboratory, University of California, Berkeley, CA 94720

4 Engineering Division, Lawrence Berkeley National Laboratory, Berkeley, CA 94720

5 Institute for Nuclear and Particle Astrophysics, Lawrence Berkeley National Laboratory, Berkeley, CA 94720

6 Nuclear Science Division, Lawrence Berkeley National Laboratory, Berkeley, CA 94720

7 Department of Physics, University of California, Berkeley, CA 94720

8 Department of Physics, University of Arizona, Tucson, AZ 85721

9 Department of Physics, University of Hawaii, Honolulu, HI 96822

10 Physics Division, Lawrence Berkeley National Laboratory, Berkeley, CA 94720

11 Department of Physics, University of California, Riverside, CA 92521

Contact Person: D. R. Nygren (nygren@lbl.gov)

Executive Summary

The detection of high energy neutrinos offers unique opportunities for astrophysical investigations. Because neutrinos are not deflected by magnetic fields and interact only weakly with matter they can be used to find and study objects for which other types of radiation would be obscured by the intervening matter encountered over cosmic distances. The detectors currently being planned, built or deployed [AMANDA (Antarctic ice), BAIKAL (deep fresh water), DUMAND and NESTOR (deep ocean water)] point the way toward a very large detector system – on the scale of a square or cubic kilometer – that is believed necessary to observe the low fluxes of high energy neutrinos from distant cosmic objects such as Active Galactic Nuclei. This letter of intent addresses a set of new technology developments that are needed to proceed from the present detectors to a km-scale neutrino observatory.

The main challenge for neutrino astronomy is to detect rare signals in a relatively copious background; this requires data of the highest quality and maximum information content. In addition there are technical and logistical challenges connected with scaling present detectors upward in size and number of elements in a cost effective manner. The new technical concept centers around a combination of analog and digital signal processing that begins in the optical module, the basic element of the detector. Digital information from a number of optical modules located at depth on a string (in either the ocean or polar ice) will be transferred to a local substring module and thence over large distances to a base station. A new development in microcircuit technology, the Analog Transient Waveform Recorder, will capture the entire time and amplitude dependence of the signal in real time, store it, and, upon receipt of a trigger signal, read out the analog signal for digitization. This microcircuit and all the electronics in the optical module and local substring module will have a very low power consumption. Taken together, these developments follow a straightforward technical path that will meet all performance objectives for dynamic range in energy measurement, time resolution, wave form recording, and low power consumption. The net result will be the availability at the base station of primary data of sufficient completeness and quality to enable the identification of the desired, but rare, neutrino events from background events.

The development and demonstration of this technology will occur in three phases over a period of about two and one half years. Phase I focuses on the design and construction of prototypes of the advanced optical module including the ATWR chip, local substring module, and GaN optical beacons (a new technology for testing and calibrating the detector *in situ*). Physics and trigger simulations, clustering of the detectors and other system aspects affecting technology development will also be studied. A string of from six to ten optical modules and all the remaining elements needed for a complete, deployable unit will be produced in Phase II. This system will be deployed, tested and evaluated in Phase III. Most of the development during Phase I can proceed independent of the subsequent choice of venue (ocean or ice) for deployment. At the conclusion of Phase III, the new technology needed for an engineered design and scientifically optimized km-scale detector for high-energy neutrino astrophysics will be in hand.

Contents

1 Introduction **1**

2 Science Goals of a km^3-Scale Neutrino Observatory **3**

2.1 Neutrino Astronomy 3

2.2 Other Science Achievable with a km^3 Detector 4

3 Experimental Aspects **6**

3.1 Signal and Background vs. Energy 6

3.2 Background Discrimination 6

3.3 Measurement of Energy 7

3.4 Signal Processing and Information Quality 8

3.5 Detection Methodology 8

4 Status of Prototype Detectors Under Construction **9**

4.1 AMANDA 9

4.2 BAIKAL 10

4.3 DUMAND 10

4.4 NESTOR 11

5 General Performance Goals **11**

5.1 "Robust" Pattern Recognition 11

5.2 Energy Measurement 12

5.3 High Quality of Raw Data 12

5.4 Conservative Engineering Approach 13

5.5 Summary 13

6 Technical Requirements **14**

7 Technology Choices and System Design **15**

7.1 Contemporary OM Designs 16

7.2 OM Concept – Digital Data 18

7.3 Local Substring Module 26

7.4 Trigger and System Issues 27

7.5 Summary: Digital OM Approach 28

8 Progress To Date **29**

8.1 Digital OM Design 29

8.2 Optical Beacons 30

8.3 Physics Simulations 31

9 Specific Objectives and Responsibilities **32**

9.1 PHASE I 32

9.2 PHASE II 36

10 Deployment Tests - Phase III **36**

10.1 Antarctica: 37

10.2 Ocean Testing at the DUMAND site 37

10.3 Other Pacific Ocean Possibilities: 40

10.4 Arctic Ocean: 41

11 Organization **41**

A Background on JPL and the LWG **52**

B OM Concept – Analog Data **53**

List of Tables

1 Event rates expected for various possible sources of high-energy neutrinos. . 7

2 Description of ships used in past DUMAND sea operations. 40

List of Figures

1 Schematic architecture of ATWR. 43

2 ATWR floor plan. 44

3 LSM block diagram. 45

4 OM block diagram. 46

5 Reconstructed pulse waveform. 47

6 Reconstructed PTM waveform. 48

7 One active optical module. 49

1 Introduction

The neutrino, although the most weakly interacting particle known, continues to excite strongly the interest of particle physicists, astrophysicists, and cosmologists. It alone can carry nuclear reaction information from deep within stellar interiors, or transport signals of the highest energy from Active Galactic Nuclei (AGN) across cosmological distances. It may also possess a non-zero rest mass, leading to flavor oscillations and a substantial contribution to the mass of the universe [1].

The anticipated fluxes of high-energy cosmic neutrinos are comparable in order of magnitude to those of high-energy gamma rays. Although the interaction cross-section rises strongly with energy, the observation of cosmic neutrinos still requires detectors of very large area. The exciting scientific horizons, both in astrophysics and in particle physics, have justified current projects to construct water-Čerenkov detectors having effective areas of about 2×10^4 m^2 and energy thresholds in the range between TeV and PeV.

AMANDA [2], located in Antarctic ice, BAIKAL [3] in Lake Baikal, DUMAND [4] in the Pacific ocean, and NESTOR [5] in the Mediterranean Sea, are still in their early stages of deployment but are expected to begin limited operation in the next one to two years. Although results from any of these projects will be a prerequisite to the construction of a larger detector in the future, planning for the next generation of high-energy neutrino telescope has already begun. The reason for this is that full realization of these scientific opportunities requires a detector scale of $\sim$1 km^2 in area or $\sim$1 km^3 in effective volume [6].

The scientific goals of this next generation detector require that a new and efficient technology for gathering and retrieving data be developed. A reasonable time scale for developing and submitting a future proposal for a km^3 detector – the next two to three years – implies that research and development toward this goal begin now. This letter of intent focuses on those technical developments we regard as essential for the preparation of a credible proposal for science with a km^3 scale detector.

This effort by the Jet Propulsion Laboratory, Lawrence Berkeley National Laboratory, and the Universities of Washington, Hawaii, and California – Berkeley and Riverside, has its origins in a workshop entitled "Neutrino Astrophysics Technology Workshop" organized by Prof. Kwan-Wu Lai and held in March 1994 at JPL. Subsequent workshops in June 1994 at Snowmass, Colorado, and at LBNL in December 1994 helped define the technological areas in which development will be most needed. During this period a group of scientists from JPL, LBNL, and regional universities began to meet regularly at JPL, and this became known informally as the Local Working Group (LWG) (see Appendix A). Through the LWG and with discretionary funds provided by both JPL, CalTech and the Institute for Nuclear and Particle Astrophysics (INPA) at LBNL, some initial development work has begun. However, it is clear that an R&D effort in support of a proposal for a detector of such size and commensurate cost requires funding beyond what can be expected from these sources.

The goals of this document are to identify and describe important new technological capabilities for high-energy neutrino detection in large water-Čerenkov detectors. By and large, these capabilities will have value independent of the phase of the water – liquid or ice – and thus be of direct value to a large constituency of scientists already participating in AMANDA, DUMAND, BAIKAL, or NESTOR and scientists who have been attracted directly by the prospect of the km^3 detector.

In the long range, the most important outcome of the developments proposed herein will be a technologically mature proposal for the km^3 detector. Indeed, an improved technology should have a direct positive impact on the scientific strength of the eventual proposal. The product of most central importance from this R&D effort will be a new optical module (OM) design with innovative active electronic circuitry. The OM is the fundamental detection element for the large water-Čerenkov detectors under consideration here, and its capabilities and performance determine the scientific reach of the detector as a system.

The scope of effort has been limited to the tasks of greatest perceived value, and for which the path to a robust, cost-effective technical solution appears straightforward. We believe that the proposed work described here, though limited, is essential for the future of this field.

Specifically, we envisage the following tasks:

- A new optical module (OM) with active electronics and operating within a digital system context.
- A local substring module (LSM) which collects data from a subset of OMs, transmits data to the surface station, and distributes power and control data to the OMs.
- Optical beacons based on GaN LEDs.
- A prototype test string containing a number of OMs, LSMs, and beacons.
- An optimized system model, including at least one attractive array configuration.
- Deployment and verification of the prototype string performance to gain experience.

To provide some context, a brief review of scientific motivations is presented next. This is followed by a discussion of some relevant experimental aspects, and a capsule review of the current situation of DUMAND, AMANDA, BAIKAL, and NESTOR. To generate a coherent picture of all the numerous factors involved, we then include a section on context and our general perspective. Based on this discussion, the performance requirements, technology issues, specific goals, and institutional responsibilities are elaborated.

2 Science Goals of a km^3-Scale Neutrino Observatory

2.1 Neutrino Astronomy

The universe has now been observed with instruments sensitive to photons that span 60 octaves in frequency, from VLF radio waves through the cosmic microwave background, optical frequencies, and to GeV gamma-rays. However, extending photon astronomy to TeV energies and beyond has proven difficult; fluxes are very small and must be detected in the presence of a background flux of cosmic rays typically 100 times greater. There has been some success, with the discovery of TeV photons from the direction of the Crab Nebula and from the active galaxies Markarian 421 [7] and most recently Markarian 501 [8], but there are some limitations with TeV photon astronomy that strongly encourage efforts to observe the sky in TeV neutrinos instead. High-energy neutrino telescopes could have several advantages over their photon counterparts:

- Neutrinos, unlike photons, yield information on astronomical objects shielded by large amounts of intervening matter, and thus could reveal objects with no counterpart in any wavelength of light.
- Neutrino telescopes examine a large fraction of the sky all the time, in contrast to TeV gamma-ray detectors such as air-Čerenkov telescopes which scan only a few square degrees at a time.
- Expected sources of neutrinos at these energies should dominate the background of cosmic-ray-induced neutrinos, in contrast to the situation in TeV gamma-rays, where cosmic-ray backgrounds greatly exceed the signals from point sources.

Several types of astronomical objects could act as effective accelerators of high-energy protons up to 100 TeV or even higher energies; if so, they must produce $\sim$ TeV neutrinos when these protons interact with matter surrounding these objects. Currently, the most promising of these are nearby active galactic nuclei such as Markarian 421 and 3C279.

Expected event rates are summarized in ref. [6], and lead to the conclusion that a neutrino telescope must have an effective area of order 1 km^2 to have a good chance of observing point sources. It must be emphasized that these estimates may be in error by an order of magnitude or in some cases more, due to uncertainties and assumptions in our understanding of these extremely energetic astrophysical sources. The quoted values can only be taken as a reference point for experimental design considerations.

Reconstruction of muon trajectories with precision at or near the multiple scattering limit is clearly a foremost requirement for the goal of astronomical observations. Energy measurement capability, with sufficient resolution to distinguish between the domain of atmospheric

neutrino energies and the ultra-high energy domain of AGNs, is important to maximize the S/N ratio. The measurement of electron neutrino interactions will impose daunting requirements for dynamic range.

2.2 Other Science Achievable with a km^3 Detector

It should be emphasized that a detector of the size envisioned here is a multi-purpose instrument, capable of many sorts of measurements in astronomy, astrophysics, and particle physics. Besides the primary goal discussed above, the scientific reach of such a detector includes the following:

- **WIMPs**
  In addition to the observation of galactic and extragalactic particle accelerators, a km-scale neutrino telescope could be used to indirectly detect heavy nonbaryonic dark matter particles. If such weakly interacting massive particles (WIMPs) make up the dark matter in the galaxy, they move through the solar system at approximately 200 km/sec. Some will elastically scatter off material within the Sun and be gravitationally captured, leading to a higher concentration of the particles at the core of the Sun. The high concentration leads to a high rate of WIMP-antiWIMP annihilation; one of the products of these annihilations is high-energy neutrinos, with energies typically 1/4 of the mass of the parent WIMPs.

  A simple order of magnitude calculation [6] leads to an estimate of order 1000 events/year for a WIMP candidate of mass 500 GeV; a number of theoretical studies that have been done using specific candidate WIMPs such as supersymmetric particles [9] calculate similar rates. This technique is especially useful for setting limits on the abundance of very heavy WIMPs (200 - 1000 GeV) where the allowed fluxes are too low for the current generation of direct detection methods.

  The efficient detection of WIMPs will require the capability to trigger on relatively low energy muons – as low as ~50 GeV. These muons have a range which is much less than the km-scale of the detector system; a fairly dense array may be necessary for the efficient detection and reconstruction of muons originating from neutrinos arising from WIMP annihilation in the sun. A densely configured array might conceivably be the initial stage of the ultimate km-scale detector; certainly topics with this kind of experimental signature will be addressed by SUPERKAMIOKANDE.

- **Neutrino Oscillations**
  The study of neutrino oscillations is possible by simultaneous observation of cosmic ray muons and neutrinos of similar energy. Neutrino telescopes at a depth of roughly 1 km would probe the parameter space $\Delta m^2 \gtrsim 10^{-3}$ eV^2 and $\sin^2 2\theta \gtrsim 10^{-3}$ [10]. Currently, studies of atmospheric neutrino events indicate a significant and persistent discrepancy

in the observed electron neutrino to muon neutrino ratio. This may be evidence that significant new physics lies within reach of large scale instruments.

- **Muons**
  Muons generated in the atmosphere continue to provide hints of astronomical processes as well as calibration signals for underground detectors. Studies made with previous underground instruments have suggested possible associations with astronomical point sources (*e.g.* Her X–1, Cyg X–3) and anisotropic distributions of muons (as in the IMB experiment [11]).

- **Gammas**
  Calculations have also suggested that gamma-ray astronomy at high energies might be possible with downgoing muons or pairs of muons [10]. While many of the "signals" reported in the past are most likely artifacts, an instrument in the km^3 class will acquire enormous statistics and permit a definitive conclusion.

- **Tau Neutrino**
  Direct observation of ultra-high energy τ neutrinos should be possible through the predicted "double bang" signature of separately observed τ lepton production and decay points [12].

- **Supernovae**
  Detection of the thermal neutrino emission from nearby supernovae by careful monitoring of the overall noise rates of the OMs in the detector is currently being pursued by the AMANDA collaboration [13]. If paired-coincidence techniques in an ice setting are feasible, the sensitivity would be vastly increased as the noise rate would be reduced by a factor of $\sim 10^5$, with a reduction in sensitive volume of perhaps two to three.

- **Gamma Ray Bursters**
  Recently, estimates have been made for gamma-ray burster models that suggest the possibility of a large component of accompanying neutrino emission [14]. While not yet evaluated in the context of a km-scale astrophysical observatory, the detection of such signals in coincidence with the gamma burst would reveal much about their nature.

- **Earth Tomography**
  Measurement of the interior structure of the Earth, by observing the attenuation of the flux of a source of very high-energy neutrinos ($\gtrsim$ 10 TeV) as the source is viewed through the Earth at varying column density [15]. Rather optimistic fluxes are needed to realize this possible goal.

3 Experimental Aspects

From the above brief discussion, it seems clear that the realization of a km-scale neutrino astrophysical observatory will be immensely rewarding. However the detection and reconstruction of neutrinos of astrophysical interest is a serious challenge. Associated with the low rates and small S/N ratio, there are numerous and wide-ranging experimental issues of great challenge that must be resolved to fulfill the science goals. To help define the technical difficulties, to set up developmental tasks, and to guide our further work, we identify the following five major aspects.

3.1 Signal and Background vs. Energy

Typically, point sources of high-energy neutrinos are expected to have an E^{-2} spectrum, while the "background" of atmospheric neutrinos has an E^{-3} spectrum [6]. This means that for sufficiently high energies, above 1 TeV, the signal from expected sources will exceed background. By integrating the atmospheric neutrino flux and the expected spectra for various possible sources, properly weighting the energy-dependent neutrino cross section and range of the produced muon, the rate of detection of upward-going neutrino-induced muons is calculated.

The performance of the detector system can be reliably expected to improve with energy. The overall detection efficiency, the signal/background ratio, and the angular resolution all improve with energy. At 6.3 PeV, the signal will be enhanced by orders of magnitude due to the Glashow resonant peak in the electron antineutrino cross section. This may ultimately serve as a benchmark of energy calibration for the detector array.

Calculations of the event rates expected from various possible sources of high-energy neutrinos [6] are reproduced in Table 1; it is clear that an effective area of order 1 km^2 is required to achieve event rates of more than 10/year for reasonable models of galactic and extragalactic point sources.

3.2 Background Discrimination

There are two main backgrounds to consider. One is the irreducible background of upward-going muons produced by atmospheric neutrinos, discussed above. The other is produced by the comparatively large flux of downgoing muons produced by cosmic rays striking the surface above the detector. Typically, depending on the depth of the detector, the downgoing muon flux will exceed the flux of upgoing atmospheric neutrino events by a factor of 10^3 (deep ocean) to 10^5 (antarctic ice); if even a small fraction of these events are misreconstructed so that they appear to be upgoing muons, they will completely swamp the desired measurements

Table 1: Event rates expected for various possible sources of high-energy neutrinos.

	EVENTS PER YEAR IN 1 KM^2	
• ATMOSPHERIC (angle averaged, per steradian)		
muon energy	Ref. [16]	Ref. [17]
> 1 GeV	78000	83000
> 1 TeV	1290	1040
• ATMOSPHERIC in 1° circle, Ref. [17]		
muon energy	$\cos\theta = 0.05$	$\cos\theta = 0.95$
> 1 GeV	126	56
> 1 TeV	2.1	0.5
• EXTRATERRESTRIAL FLUXES (angle averaged)		
$\phi_\nu = 2.7 \times 10^{-8}(E_\nu/TeV)^{-1.7}$ cm^{-2}s^{-1}		
muon energy	no abs.	with abs.
> 1 GeV	327	320
> 1 TeV	43	38
$\phi_\nu = 4.0 \times 10^{-11}(E_\nu/TeV)^{-1}$ cm^{-2}s^{-1}		
muon energy	no abs.	with abs.
> 1 GeV	88	66
> 1 TeV	50	33
• ASTROPHYSICAL DIFFUSE FLUXES (per steradian)		
muon energy	plane of galaxy	AGN
> 1 GeV	120–200	800–16000
> 1 TeV	15–30	400–8000
also ν_e (6.3 PeV) $+ e \rightarrow W^-$		$\sim$ 300 per km^3
• ASTROPHYSICAL POINT SOURCES (E_μ > 1 TeV)		
Galactic source		26
Extragalactic source (3C273)		1–250
• 500 GeV WIMPS from $\odot$		1000

of atmospheric and astrophysical neutrinos. The identification and efficient rejection of this background is clearly an essential requirement for a neutrino telescope. It may be worth noting that accelerator-based experiments searching for rare decays have achieved rejection factors exceeding 10^9 – primarily by ensuring robust event reconstruction with high-quality raw data.

3.3 Measurement of Energy

A rough measurement of incident neutrino energy is valuable for several physics goals. At lower energies, the incident flux is dominated by atmospheric neutrinos, whereas neutrinos from AGNs may dominate the higher energy region. WIMP events would likely be restricted to the few hundreds of GeV energy domain. Several of the other topics listed above would

also benefit from energy information, as well.

Energy measurements will be made by measuring the initial hadronic or electromagnetic showers, depending upon the type of neutrino interaction. Additional information can be obtained by measuring the distributed showers along the trajectories of ultra-high energy muons, which can be expected to radiate significantly. Since the primary detection elements, the OMs, must also be sensitive to single photons for track reconstruction, the measurement of energy places an enormous dynamic range requirement on the detector elements.

3.4 Signal Processing and Information Quality

Given the above discussion, and noting some additional instrumental factors, we emphasize that the overall instrumental concept must be guided by the following points:

- Background processes are from three to five orders of magnitude more copious than the signal;
- Background processes include complex multiple muon bundles, at the few % level;
- The Čerenkov luminous intensity can vary from about 2 x 10^4 photons/m (muon track) to $\sim 10^{10}$ photons/m (electron shower);
- Instrumental effects such as PMT afterpulsing (and even prepulsing with large photon input levels – due to photoemission from the first dynode) are certain to be present at some level;
- At very high energies, the muons will radiate significantly along their trajectory;
- Even with a km-scale detector, the number of true signal events will not be large.

Therefore, we conclude that the credibility of many possible scientific results will depend strongly on the acquisition of extremely high-quality primary data. This conclusion has had a major impact in the definition of the tasks we plan to undertake.

3.5 Detection Methodology

In conjunction with the optical Čerenkov radiation detection, it is possible that two other detection techniques can augment the sensitivity to events of high interaction energy. If the km^3 array is built in the ocean, then inexpensive hydrophones can extend the reach in both sensitive volume and energy resolution. If the array is built in the ice, then radio microwave detection may provide a similar extension. In either instance, inclusion of these

different and relatively inexpensive detection methods may provide interesting capabilities and cross–checks, although their energy thresholds are too high to base an array solely on these techniques. We mention these here only to note that the utility of these techniques is complementary to the developments we propose. Only the optical Čerenkov radiation detection technique has been employed extensively for physics research.

4 Status of Prototype Detectors Under Construction

In this section, we provide a brief summary of the current status of the four most relevant experimental efforts around the world to highlight what has been learned and what may be expected in the near future. Of course, the two large-scale pioneering experiments – IMB and KAMIOKANDE – have provided much of the experience from which these four draw.

4.1 AMANDA

The AMANDA collaboration [2] has already deployed four prototype detector strings at a depth of 1 km at the South Pole. The immediate advantages of this location are 1) solid mechanical support for the detectors, 2) very low noise level of OMs (typically 1–2 kHz) because of the low temperature and lack of radioactive background, and 3) short distance between the OMs and the surface. The low radioactive backgrounds and short distance to the surface has allowed AMANDA to deploy OMs containing only a photomultiplier tube (PMT), resistors, and capacitors at depth. The analog signals sent to the surface via coaxial cable, which also supplies the HV. Pulse dispersion and attenuation are quite significant, however, after transmission by coax over this distance. Signal processing and triggering are accomplished mainly with off-the-shelf electronics.

Although residual bubbles are found at depths as large as 1 km, their density has been observed to decrease with increasing depth (in the limited range of 800 – 1000 m). At 1 km, the optical scattering length due to bubbles is ~20 cm, a severe limitation. However, the ice below 1500 m is expected to be bubble-free in a model based on clathrate formation [18]. The scattering from clathrates is expected to be manageable. On the other hand, the absorption length in the polar ice at this depth has been measured and is extremely long, rising to 240 meters for wavelengths of ~410 nm [19].

The polar environment is harsh, and is only accessible during three months each year for deployment operations; however, logistical support provided by ASA has been excellent. The general technology has been satisfactorily demonstrated with the deployment of the first four strings. The hot-water drilling technique has been extended to depths of 2 km in the 1995-1996 campaign, and the collaboration has deployed four strings of 20 OMs each. To compensate for attenuation and dispersion in the 2 km cable length, the PMTs must be

operated with a gain approaching 10^9.

4.2 BAIKAL

BAIKAL [3] is a collaboration of Russian and German scientists that has deployed an array of 72 OMs at 1 km depth in Lake Baikal. Like AMANDA, they are at a relatively shallow depth, but they must contend with a background rate of tens of kHz in each OM from bioluminescence in the lake. They suppress this background by pairing OMs in a tight trigger. The paired OMs form a "channel", which counts at a few hundred Hz. Half the OMs point upwards to achieve the same acceptance over the upper and lower hemispheres.

The array of 72 OMs has been operating, with 14 of 36 possible channels available, since April 1993. They have reached a record up/down rejection ratio of 10^{-4} and, according to their Monte Carlo, will reach 10^{-6} (atmospheric neutrino level) when they deploy their full complement of 200 OMs. This pioneering effort has produced extremely valuable experience for the emergent field of neutrino astronomy.

4.3 DUMAND

DUMAND [4] will be located under 4.5 km of ocean water, relatively well shielded from the cosmic-ray muon background. At this depth, the downgoing muon flux is 10^3 times the upgoing muon flux from atmospheric neutrinos, versus 10^5 - 10^6 for AMANDA and BAIKAL. The deep ocean water is very clear, with a measured attenuation length of around 50 m in the blue; the scattering length, less well known, is presumed to be in the range of 100 – 200 m.

However, each OM has a high noise rate, typically 20 times (correcting for differences in PMT cathode area) greater than that for the case of polar ice, caused by ^{40}K and bioluminescence in the deep ocean water. The deep ocean is a difficult and costly location for access and service, but there appear to be new robotic approaches that could mitigate these concerns greatly. As the detector is located 25 km from shore, some electronics must be located within or near the OMs in the deep ocean, and therefore be built to especially high standards of reliability. On the other hand, recovery of an OM string for repair has already been successfully demonstrated.

The DUMAND group has successfully analyzed data on cosmic-ray muons from the deployment of a test string [20]. They are currently planning to deploy 3 strings in 1996. Experience gained from this effort will be extremely valuable for the planning and development of km-scale detectors.

4.4 NESTOR

NESTOR [5] is similar to DUMAND – it will be placed in deep water (~3.5 km) in the Mediterranean – except that half of its optical modules may point upwards, as in BAIKAL (sedimentation on upward pointing surfaces may rule this out). NESTOR is designed to have a higher number density of OMs in the central volume, to enable local coincidences on lower energy events, possibly down to the supernova energy range.

The geometrical organization of NESTOR is a tower of 12 "floors", with each floor composed of a titanium structure supporting a hexagonal array of OMs at the tips. Electronic functions are contained within a central titanium module on each floor. The electronic system concept of NESTOR involves a 20 MHz master clock, generated at the shore station and distributed to each central floor module. A phase-locked loop connects the master clock with signal processing FADCs and memory operating at 300 MHz. The NESTOR system is thus a rather conventional concept although the engineering may well be challenging; its behavior and performance will be of great interest to the community.

As a premise in their design, no undersea connections are required during or after deployment. They plan to begin deploying in 1997.

5 General Performance Goals

In this section we summarize the subset of performance requirements germane to the developmental activities we propose to undertake. While some of these requirements are perhaps obvious, there exist interdependences which merit their inclusion for a coherent discussion.

5.1 "Robust" Pattern Recognition

Muon track reconstruction begins with the detection of Čerenkov photons by several OMs sufficiently near the trajectory. The quantitative meaning of the word "several" is under study; it surely depends on zenith angle, since the difficult background of multiple cosmic-ray muons consists of predominantly downward–going trajectories. It will also depend sensitively on the optical scattering and absorption properties of the medium.

Ideally, any muon entering the array should be reconstructed correctly, within the resolution. There is not yet a worldwide consensus as to whether or not downward-going (mainly background) muons need to be reconstructed with the same efficiency or accuracy as upward-going (signal + low energy background) muons. A decision one way or the other here has significant cost consequences.

For maximum sensitivity, the OM must efficiently detect a single photon. The timing accu-

racy and resolution of the OMs for single photons must not exceed 2 ns rms, and the relative spatial position of the OMs to their neighbors needs to be known to ~15 cm accuracy.

This point touches on array design optimization – topologies, OM spacings, OM clustering, *etc.*, and will be studied in the simulation activities. Fortunately, the specific technical activities we wish to undertake do not appear to depend much on array design specifics. However, as the outcome of much of these technological developments is to improve the OM performance, the result will doubtless also improve the cost-effectiveness of the system. For example, for a desired energy threshold, the choice of array geometry, OM spacing, OM pairing or clustering, and trigger schemes will be determined not only by the medium properties (such as absorption and scattering length for Čerenkov light, and the background level in the environment), but also by the performance of the OMs.

5.2 Energy Measurement

Energy measurement by muon range is useful only at lower energies, as a 200 GeV muon can traverse a kilometer of water/ice. For energies greater than ~200 GeV, radiative processes dominate energy loss, and increase linearly with energy. These radiative processes lead to significant electromagnetic showers appearing randomly along the trajectory, but frequently enough that their measurement becomes both necessary and interesting. As noted earlier, a rough measurement of energy can enhance the S/N for AGN neutrino astronomy very substantially. Electron neutrinos can deposit enormous amounts of energy in a single shower, *e.g.*, the Glashow resonance at 6.4 PeV. Similarly, τ neutrino interactions at very high energies will lead to the "double bang" event with two nearby large showers connected by a muon-like track.

The numerous questions concerning energy measurement will be an important part of the simulations studies. However, these questions appear to mainly affect the technical requirements for pulse-height dynamic range of the OM. Given that the local "energy" deposition can vary from a single photon, characteristic of a muon track with large impact parameter, to a nearby electromagnetic shower with hundreds of GeV involved, there is no crisp limit to the desired dynamic range; the question then devolves to one of practicality. With the proposed dual-range electronic approach using both anode and dynode (or even two dynodes) signals, described below, it is expected that the dynamic range will be well in excess of 1000, perhaps to as much as 10,000 using a non-linear ADC transfer characteristic.

5.3 High Quality of Raw Data

Referring to the arguments and conclusion of section 3.4, we have concluded that waveform recording of the PMT signal for a few hundred ns over the time interval of interest is essential for robust reconstruction of muon tracks, accurate recognition of event process, and for

the efficient identification and rejection of the various background processes, anticipated and unforeseen. Given the presence of muon bundles at the few % level of single muons, we believe this conclusion is inescapable. Because the overall rates are low, and because certain technological advances have occurred recently, this capability may be realized in a straightforward manner.

Waveform recording at ~500 Msample/sec, with 8 – 10 bit dynamic range and a sample depth of ~ 128 – 256 would provide the requisite performance. The sample depth of 128 at 500 Msample/sec corresponds to about one absorption length in water, or about 50 meters. At the same time, the power dissipation must be low, in the few tens of mW, to meet the desired overall power budget. It does not appear possible to meet this combination of performance and power specs simultaneously using conventional flash ADCs and fast memory. However, these capabilities can be easily achieved with a novel full-custom IC, building on rather extensive CMOS design expertise developed at LBNL. This IC and its role are discussed extensively in section 7.

5.4 Conservative Engineering Approach

In a system choice that contains active electronics at depth, it is postulated that system engineering approaches should strive to reduce power consumption to the lowest level compatible with performance objectives. This axiom may have implications not only for OM architecture and functionality, but may, for example, permit power distribution via the same optical fiber used for information transmission, a potentially interesting approach.

On a more mundane level, a km^3 scale system with *e.g.*, five thousand OMs at five watts each would draw more than 25 kW from the local power source. At the south pole this may require a dedicated power supply. In any water setting, transmission of 25 kW via cable is not a particularly attractive path either. A natural goal appears to be in the range of 100 – 300 mW per OM.

In this vein, it would appear prudent to try to avoid the use of ultra-high speed clocks (~1 GHz) and related circuitry for time–stamping and processing events. The ultra-high speed clock/scaler, ADC, and associated memory circuitry will require high power, may generate more noise, and be perhaps more temperamental and less reliable.

5.5 Summary

In summary, there are four general aspects which provide motivation for the new technological developments:

- **Energy measurement: ⇒ Very large dynamic range capability;**

- **Complex, intense background processes: ⇒ Waveform recording;**
- **System operation: ⇒ Modest power consumption;**
- **System robustness: ⇒ Conservative engineering.**

6 Technical Requirements

The preceding discussion of general performance goals leads to a fairly short list of technical requirements, most of which address the OM itself. The first four requirements have the greatest impact on technical design.

1. **OM time resolution and time stamping accuracy:** ~2 ns rms
   The justification for this is the need to determine accurately the trajectory of muons, in order to begin astronomical observations. This level of resolution is realized with contemporary PMTs, and sub-nanosecond electronic accuracy is also commonplace.

2. **Dynamic range:** 1,000 – 10,000 photoelectrons (PE)
   The justification for this requirement is the measurement of energy, ranging from the showering of higher energy muons to the extremely energetic "Glashow" resonant electron antineutrino - electron shower events at ~6.4 PeV. There may be contained events that transcend even this enormous value substantially; the simulations should be able to sharpen this specification. As this requirement is specified in units of SPE ($\approx$ 4 bits), the electronic S/N ratio corresponds to about 14 bits, a non-trivial objective. Non-linear transfer characteristics are appropriate here, with an approximately $\sqrt{PE}$ response a natural candidate.

3. **PMT pulse waveform information:** 250 ns history with ~5% accuracy
   The justification for this requirement comes from the very large ratio of more or less downward-coming muon trajectories ("background", for most purposes, and frequently in bundles) to the more or less upward-coming muon trajectories that constitute the anticipated signal. It is difficult to argue convincingly that all the various and subtle pernicious background effects that could lead to misreconstructed tracks will be accurately simulated *a priori*. It is prudent under these circumstances to make every effort to obtain raw data of the highest quality and information content.

4. **Power dissipation per OM:** $\leq$0.3 W
   As noted earlier, a km^3 array with 5,000 – 10,000 OMs, each dissipating several watts, could present unpleasant power distribution or reliability problems, and possibly a substantial cost penalty.

5. **Deadtime of OM:** $\leq$3%
   The justification is based on the well-known property that track reconstruction efficiency will fall as ϵ^n, where ϵ is the typical uncorrelated lifetime fraction of the n individual OMs involved in the fit. Since somewhat overconstrained tracks will be the cleanest, n is likely to be six or greater. Were ϵ as low as 0.9, ($0.9^6 = 0.53$) nearly half of the reconstructable tracks are lost. It is clear that deadtime per module and all other sources of inefficiency must be kept as low as possible. In addition it must be known which PMT is alive and which is not for each event. This requirement is identical in motivation to that for SPE detection efficiency.

6. **Single photoelectron (SPE) pulse detection efficiency:** $\geq$95%
   The justification for this requirement is that the Čerenkov process is relatively weak, and loss of photon detection efficiency at any point leads to the need for greater density of OMs within the array to maintain track reconstruction efficiency. Thus loss of SPE detection efficiency implies either greater costs for constant sensitive volume, or reduced performance.

7. **Single photoelectron charge resolution:** 5% ($\approx$4 bits)
   Because of the stochastic nature of the SPE amplification process within the PMT, the rms variation of SPE pulse-to-pulse charge is large. Therefore, little or no value would result from specifying high resolution for the observed SPE charge. Nevertheless, the average SPE charge is an essential quantity for measurement of energy, and the accuracy of average SPE charge should be calibrated to the 1% level.

8. **Electronic noise level within OM:** $\leq$ 0.05 SPE rate per OM
   The justification for this requirement is that the rate of electronic noise hits in a high bandwidth discriminator rises exceedingly rapidly as the discriminator threshold is lowered into the noise. Therefore, safe system operation requires that noise hits should be suppressed to an essentially negligible level by setting the threshold with substantial safety margin. Consequently, the PMT gain must be raised to the point that the detection efficiency meets the previously defined specification.

9. **Crosstalk effects among OM (from any source):** $\ll$ 0.1 SPE
   The justification for this is simple enough, since track reconstruction will suffer rapidly from the introduction of correlated noise. This specification should not be difficult to achieve if kept in mind during the system design phase.

7 Technology Choices and System Design

In this section we discuss factors that connect technology development with system considerations and ultimately the science objectives. The technical challenge for neutrino astronomy at the 1 km^3 scale couples general issues such as performance, cost, reliability, and longevity,

with those of triggering, data acquisition, calibration, monitoring, control and science reach. Only a fully developed proposal for the km^3 scale observatory can explore this subject completely.

Nevertheless, the lengthy commentary in this section is intended to address explicitly the reasonable concern that the exploration of a particular technological opportunity, however attractive in itself, runs the risk of solving what turns out to be a tangential or even an irrelevant problem in the greater picture. We hope that the reader will conclude that we have perceived not only the span of likely avenues for profitable R&D, but have also recognized accurately the technological path of highest possible relevance to the future km^3 proposal.

In the DUMAND, NESTOR, and BAIKAL water-based experiments, active electronic circuitry is employed within water-tight enclosures to provide local signal and power conditioning, HV generation, and system monitoring. In all these experiments, the OMs are connected to relatively nearby "string controllers" or "electronics modules" which collect, process, and multiplex data for transmission to shore. We envisage a similar system concept, called a "local substring module (LSM)" and described in section 7.3, but with some important differences that can improve robustness against single-point failure (SPF).

In addition, BAIKAL includes local pair-wise coincidence between neighboring OMs to reduce the primary data rate to a much lower level. The penalty introduced by the coincidence requirement is a smaller sensitive volume than would be obtained with the same two OMs in non-coincidence. Nevertheless, this may be an essential feature of a km–scale detector, and is discussed further in section 7.4.

The sole ice-based endeavor is AMANDA, which employs a passive OM design, *i.e*, with no active circuitry. Thus, two relatively extreme approaches have been put into practice, with lessons learned. We have considered both general avenues, wrestling with the disparate sets of risks and benefits each presents.

To avoid possible confusion, we state here at the outset that our conclusion is that an active digital OM concept, as described below, is the only conservative choice that appears to meet all the performance and cost requirements. In the course of evaluation, we examined the known performance characteristics and limitations of some quite interesting electro-optical analog devices/concepts; a short discussion of these is given in Appendix B in support of the digital choice.

The following discussion reviews briefly some of this experience and identifies specific technological factors, choices, or issues which we have found significant in the definition process for our planned effort.

7.1 Contemporary OM Designs

- **DUMAND Active OM**

The DUMAND OM contains a considerable amount of circuitry, including DC-to-DC power conversions for the PMT and circuitry, time-over-threshold (TOT) sensing for both current and charge, slow-control telemetry, and a 68000 series microprocessor. Several housekeeping monitoring functions are maintained. PMT signal information is transmitted by LED through multimode optical fiber to a string controller. The integrated charge TOT information follows the PMT current TOT information by 200 ns. Rather little can be inferred from this information about waveform complexity. A fiberoptic penetrator and an electrical penetrator are both required, increasing mechanical complexity.

The DUMAND OM power consumption is about 10 W. Reducing OM power consumption by a factor approaching 100 seems both highly desirable and technically possible in a new OM design for the km^3, for which thousands of OMs would be in operation.

- **NESTOR ACTIVE OM**
  The NESTOR OM has only a DC-to-DC convertor to provide the PMT with appropriate HV. The PMT signals are coupled to a coaxial cable connecting the OM with a nearby central junction box which contains all other electronics for that "floor". PMT signals and DC power are simultaneously present on the cable in the manner of AMANDA, allowing a single penetrator at the OM. The signal processing occurring within the NESTOR junction box is of interest, but the discussion is deferred to a subsequent section.

- **BAIKAL OM**
  The BAIKAL OM and the NESTOR OM are essentially identical in concept. In these designs, low-voltage DC is introduced via coaxial cable for conversion to high-voltage DC for the PMT. The analog PMT signal is returned via the same coaxial cable to a local signal-processing module. However, the BAIKAL OM has a PMT design which utilizes more than 20 kV in the first amplification stage, requiring a technically more demanding DC-to-DC converter; some reliability problems have in fact been observed to occur in these HV supplies.

- **AMANDA OM**
  The current AMANDA design is completely passive, as noted earlier, with both PMT HV and anode signal carried on a single coaxial cable. The stark simplicity of this approach has been valuable for exploratory work in the ice *milieu*. In fact, the measured time resolution for this scheme in AMANDA I is excellent – only 6 ns FWHM, measured *in situ*.

  Nevertheless, for the km^3 scale detector, the singular advantage of this method must be weighed in balance with some substantial drawbacks, such as:

  1. Degradation of the PMT signal. After transmission by coaxial cable, the observed pulse risetimes exceed 100 ns, with falltimes more than twice this value, and attenuation of the pulse height by $\sim$100.

2. Irretrievable loss of waveform information. Any complex information contained in the PMT signal such as delayed pulses from photon scattering, muon showering, PMT afterpulsing, and particularly, the not infrequent occurrence of multiple muon bundles cannot be resolved. Unexpected phenomena, either signal or background, may not be identifiable.
3. PMT operation at very high gain. To compensate for the large cable attenuation, the PMT gain is increased to $\sim 10^9$, which may compromise reliability. While there is little evidence either way on this point, PMT dynode structures are known to experience deterioration beyond some level of integrated charge, and PMTs occasionally become noisy after extended periods of high dynode current operation. For the km^3 detector, it would appear prudent to operate the PMTs at a more moderate gain.
4. Severely limited dynamic range. As noted earlier, the range of real photon signals is expected to be enormous, from a single Čerenkov photon to more than 10,000 for PeV electron neutrino interactions, a taxing span for most technological approaches. Operation of the PMT at gains of 10^9 limits the dynamic range to ≤ 10.

Because of these drawbacks, we believe that it will be necessary to choose an approach involving active electronic components within the OM to realize the required functionality.

7.2 OM Concept – Digital Data

Once one considers an OM concept which includes digital electronic circuitry, a wide horizon of functional opportunities emerges. The question becomes generally not whether some capability can be attained or is affordable, but whether that function is really necessary. Considerations of reliability and OM lifetime, of paramount importance here, provide a natural counterbalance to functional proliferation.

It is interesting to note how such endemically analog information systems such as television, music systems, wireless phones, *etc.* are moving toward digital formats. By "digital", we refer to the means of data transmission from the OM; within the OM there will of course also be some analog circuitry. From a systems standpoint, the utilization of a "digital" OM implies a rather complex dispersed architectural topology, with semi-autonomous elements.

The DUMAND collaboration reached the conclusion many years ago that an OM with extensive internal electronics was needed to meet their goals. BAIKAL and NESTOR also have extensive circuitry at depth; however, most of the electronics is contained within signal processing modules in close proximity to the OMs.

Following the recommendations of section 5, we now describe how we would realize the

specified performance employing modern integrated circuitry. We are confident that the performance objectives can be reached. The digital OM would be the baseline against which other approaches such as the analog OM using electro-optical techniques could be judged.

A primary issue is the technical choice for waveform recording: ultra-fast ADC *vis-a-vis* ultra-fast analog memory. Adequate performance is achieved in both cases, and the decision may be based on other considerations such as power dissipation, ease of design, robustness, *etc.*

- **Waveform Capture:**

  - **Ultra-fast ADC**
    Perhaps the most obvious approach for waveform capture would be the utilization of ultra-high speed ADC's with an associated ultra-high speed memory section, to convert the PMT signal over the desired time span to a digital format in real time. Indeed, 8-bit ADC's rated in excess of 400 Msamples/second are now established items of commerce, and are of affordable cost.

    This approach is reasonable, but some drawbacks can be identified. First, power consumption is typically quite high, considerably in excess of one watt for the ADC itself. Second, the ultra-fast memory needed to buffer the waveform capture is by necessity also power-hungry. Third, system design is complicated by the need to generate and propagate the high-speed clocks; also, time-stamping with clock counters at these speeds probably requires GaAs devices, which may not be a trouble-free solution. RF noise generated by these clock lines may be difficult to suppress to an insignificant level.

    In the context of an OM with, *e.g.*, a 20 kHz SPE pulse rate, it is worth considering that a 250 ns capture span corresponds to a duty cycle of only 0.5%. Therefore the ultra-fast ADC/memory would be "idle" $\geq$99% of the time, or generating useless baseline data. From this perspective, the ultra-fast ADC/memory architecture, even in burst mode, may appear to some as a perhaps less than optimum match to the overall technical problem.

  - **Analog Memory**
    We have evaluated an alternative approach which can take advantage of the intrinsically low duty cycle, and which may offer some attractive benefits. At LBNL, an analog transient waveform recorder (ATWR) integrated circuit has been developed by Stuart Kleinfelder. The ATWR IC is a monolithic multichannel device, developed in a plain vanilla 1.2 μm CMOS process using switched-capacitor sample-and-hold techniques.

    The ATWR IC is capable of sampling analog waveforms at easily programmable rates from 0.3 to 3 GHz. The sampling rate is determined by a single analog

current input to the ATWR; no external clocks are necessary. Internally, an edge-sensitive active delay line uses look-ahead and 4–way interleaving to develop the sample-and-hold clocks. The sampling action is launched by applying a step to a control node. The sampling action of the different input channels is phase-locked by the common internal structure of the delay line, so that all channels have identical sample apertures and speeds. The analog sampling bandwidth is ~400 MHz, with ≥8 bit signal/noise ratio. The analog information can be subsequently read out at MHz speeds, compatible with low-power high resolution ADCs.

One of the most important attributes of the ATWR is extremely low power dissipation. Quiescently, the standing power dissipation is about 5 mW. In typical operation, the power dissipation is dominated by the output buffer amps, ~10 mW/channel if continuously powered. As the output buffers need to be switched on only during readout, the power dissipation can be reduced in proportion to the readout duty cycle.

Two ATWR versions have been made to date. The first ATWR IC has sample depths of 512 and four input channels (with common launch). The second ATWR IC version has been modified to address the needs of the digital OM concept. It has a sample depth of 256 and three input channels; however this second version has two independent circuits on the same die. The second version has also been improved to make certain control features more agreeable for our present purposes. The three independent input channels are foreseen to carry anode, dynode, and time-stamping information, as discussed below. Some aspects of the second version of the ATWR IC are indicated in figures 1 and 2.

An architecture based on the ATWR IC can take advantage of the low average duty cycle, avoid ultra-high speed clocks, and provide excellent performance with extremely low power dissipation.

- **Choice: Analog Memory – ATWR**

  We have chosen to develop the digital OM based on the ATWR IC technical approach, rather than with an ultra-fast ADC. The ATWR IC appears to be an extremely good match to the diverse performance requirements for the OM. The use of an ATWR has profound influences not only on OM design, but on the system as well. Because of the significance of this choice we delineate here the numerous impacts, with elaboration as appropriate in subsequent sections.

  - Absence of ultra-high speed clocks and memory;
  - Very low power dissipation: ≈10 mW;
  - Excellent intrinsic S/N ratio: ≈9 bits;
  - Excellent analog bandwidth: ≈400 MHz;
  - Easily adjustable sample rate: 0.3 to 3 GHz;
  - Easy calibration of sample rate – clock edges;

- Easily adjustable number of samples;
- Automatic simultaneous anode and dynode waveform acquisition;
- Automatic simultaneous clock phase capture for nanosecond time resolution;
- Conventional 1.2 μm CMOS technology;
- Easy integration with conventional IC components;

Although the analog properties of the current ATWR are more than adequate, some further adaptation will be necessary for interface simplification and for transparent dead-time elimination. Following the discussion of section 5, the implementation we envisage is a number of samples between 128 and 256, at ~500 Msamples/sec. Simulations will help to establish the optimum number of samples and sampling speed. A full waveform digitization will produce 128 – 320 bytes, depending upon the maximum sample number and ADC resolution (8 – 10 bits).

- **Local Recognition of SPE Pulses**

  Most of the time, perhaps $\geq$99%, the PMT signals will be SPE pulses. These pulses are similar in waveform from one to the next, but amplitude varies considerably due to the stochastic nature of the dynode–based electron multiplication process. We have concluded that the local recognition (*i.e.,* within the OM) of the majority of SPE pulses with fairly loose criteria can lead to a dramatic reduction in primary data flow, and would be quite valuable from a systems perspective. There appear to be several pathways to realize this functionality. The capability to switch on or off the local recognition of SPE pulses would be incorporated as an element of the slow control telemetry.

  For example, a simple digital algorithm applied to the data as it emerges from the ADC can make the SPE decision. The algorithm can ask if the waveform rises and falls monotonically; the presence of secondary peaks would indicate a non-SPE pulse. Pulses greater than some specified total charge would also be labeled as non-SPE pulses. The algorithm would also test samples beyond the expected SPE region for above-threshold features in the waveform. A waveform failing the SPE test would be transmitted in full.

  It seems equally likely that simple real-time hardware solutions would be effective. The SPE criterion could be a combination of simple tests such as PMT comparator time-over-threshold smaller than some preset value, PMT amplitude smaller than some preset value, and no more than one excursion over threshold of the comparator during the ATWR acquisition time. Real-time discrimination of SPE pulses offers the additional advantage that only a fraction of the captured analog samples need be digitized. The number of digitized samples is determined by the need to capture the clock phase reliably, and would be in the range of 32 – 64. Reducing the number of digitized samples increases the safety margin with regard to deadtime.

Our preferred path is to implement a combination of SPE tests. The first would be the simple real-time tests for extended time-over-threshold and/or multiple transitions of the PMT discriminator, followed by a more accurate digital filtering step. It is conceivable that a custom ASIC could be a desirable part of the solution. We will also examine the possible utility of a neural net approach.

A waveform passing the SPE test would be compressed to contain only amplitude (charge), time stamping, and the OM address. This packet should require only 8 – 12 bytes. At 20 MHz bit transmission rate, ~5 μsec would be required for a standard SPE data packet.

- **Data Rates and Dead-time**
  For discussion we consider an 8" diameter PMT, which in the ocean would generate $\leq$20 kHz PMT pulse rate. The 20 kHz pulse rate would correspond to about 2.5 – 5 Mbytes/second in raw data for the anode signal. With SPE recognition, the data rate for this example would fall to perhaps 200 kbytes/sec. In this example, the average interval between pulses would be 50 μsec, so the standard SPE packet would exercise the system at 10% bandwidth; buffering at the OM will keep deadtime well below the 1% level. The safety margin is large enough to accommodate PMTs larger than 8 inches, and the optimum tube size would be a goal of simulation studies. In the ice, the rates would be ~10 kbytes/sec, lower by a factor of about 20 for the same size PMT, presenting no challenge.

  To minimize dead-time, we will pursue several avenues:

  - We will utilize ADC's operating at ~10 MHz, and provide analog buffering with parallel ATWR channels. The current ATWR has, as noted above, two completely independent three-channel circuits on the same die. It is envisaged to arrange the control logic such that these two independent nodes toggle back and forth between acquisition and digitization.
  - We will develop SPE recognition logic within the OM, so that only those relatively rare events with complex waveforms will require full digitization. For time-stamping, the digitization must proceed through at least 32 samples to associate clock counter values correctly. This SPE recognition logic will reduce digitization time by about a factor ~8.
  - Data transmission from the OM would occur at 20 MHz, or 25 nsec per half-bit, presuming a Manchester transmission code.

- **Dynamic Range – anode/dynode "Dual Range"**
  It is well-known that space charge effects can occur for large pulses within the last few dynodes of a PMT. These saturation effects can corrupt both the linearity of response and the waveform itself. In practice, an upper limit of about 8 – 10 bits for the dynamic range of an anode signal is observed, depending somewhat upon the strictness of criteria for linearity and S/N ratio.

A well-established technique to obtain a very substantial increase in the dynamic range of a detector element employing a PMT is to employ an additional signal processing path for a dynode situated typically three or four stages from the anode. Saturation effects will not occur for such a dynode until the input photon flux is very much larger than the corresponding flux for the anode. Depending on the chosen configuration and dynode gain, the increase in dynamic range can easily be an additional 6 bits.

We propose to utilize this anode/dynode dual-range approach for PMT signal processing. The ATWR IC is extremely well-suited for this purpose, as it can simultaneously record both anode and dynode signals, as noted above. If saturation effects are observed in a particular anode waveform, the signal processing circuitry will sense this and can then include the dynode signal data. As it is easy to add (at the design stage!) additional channels to the ATWR, signals from two dynodes could be simultaneously captured to provide an extremely large dynamic range with fairly graceful breakpoints in the transfer characteristic. Only those rare (but of vital interest!) pulses that saturate the anode signal processing path would result in the inclusion of the dynode data.

It is particularly noteworthy that the dual-range (or possibly triple-range) anode/dynode signal processing approach, while natural in an active OM concept such as this, would be awkward in a passive OM concept in that two separate signal paths with penetrators, fibers/cables *etc.*, would be required.

- **Time-Stamping of Events**
  Each PMT pulse must be associated in time relative to other OMs in the system with an accuracy of one nanosecond. This may be achieved without the use of widely dispersed GHz clocks by a combination of technical elements:

  - Each OM will naturally include a 20 MHz clock for local CPU operations, and this element can be used to advantage here. The clock can be used to increment a 32 bit scaler, whose value is captured at the start of a PMT pulse. This is a bit tricky since the PMT pulse and the scaler are unsynchronized. This provides a crude time-stamp with 50 nsec resolution, and an accuracy dependent upon the short-term clock stability.
  - The 20 MHz clock will be introduced into the third channel of the ATWR. The edges captured within the 250 ns sample span will provide a means to interpolate to one nsec rms accuracy the difference between the clock counter value and the appearance of the PMT pulse. This can provide one nsec resolution, but with an accuracy not yet defined. The ensemble of recorded clock edges also provides the means to calibrate the ATWR sample speed.
  - Periodically, a few times a second, a calibration pulse generated by a master clock at the surface station must be brought to the OM and cause a "time-stamp calibration event" to occur. This calibration pulse will permit correlation of the local OM clock value with the master clock, thereby providing the relative time

measurement accuracy needed, and also the means to monitor local clock drifts. This appears to be more desirable than attempting to establish a phase-locked loop (PLL) over these distances; A PLL may drift beyond the edge of control margins, introducing glitch errors both difficult to observe and compensate for.

- Optical beacons distributed throughout the array will provide the means to determine the invariant delay differences among the OMs due to system fiber lengths, circuit delays, geometrical spacings, *etc.* In the next section we discuss more fully the properties of these devices, based on a new GaN LED technology.

- **Calibration Aspects**

There are seven aspects of digital OM electronic behavior that will require monitoring and/or calibration. These are the ATWR sample speed, PMT gain, PMT discriminator threshold, anode/dynode relative gain, PMT SPE reference waveform, the drift of the internal 20 MHz OM clock, and the PMT SPE noise rate. The operational values of the first three would be remotely programmable *in situ* by DACs. The remaining four do not require remote programmability.

The method of calibration for the first three may be realized by transmitting the entire waveform of a randomly selected hit, prescaled by a programmable factor as 2^n. The exponent n can be chosen over a fairly wide range, perhaps 16 in an ocean *milieu*, and 12 in an ice setting. As this corresponds to a rate of one every few seconds, such calibration data add negligibly to the DAQ bandwidth requirements.

- The **ATWR sample speed** is set by a DAC–controlled analogue reference current. While the ATWR sample speed is expected to be rather stable once equilibrium is established, the accuracy requirements are modest and easily met. The third channel of the ATWR IC records the internal OM clock transitions as a square-wave input. The pattern of up/down edges provides a statistically significant data set in a very short time. The OM internal clock frequency only needs to be known to about one part in 10^3 to contribute negligible error. The OM internal clock is expected to be several orders of magnitude more stable than needed to meet this requirement.
- The **PMT gain** is determined by a DAC controlled voltage setpoint of the PMT DC – DC HV converter. The magnitude of the SPE charge in a running average will give evidence for drifts in PMT gain. The SPE charge may be defined simply as the arithmetic sum of the first few samples in the reference SPE waveform.
- The **PMT discriminator threshold setting** is controlled by applying a DAC voltage value to the discriminator reference input. Drifts in this quantity are easily seen by monitoring the difference between the ADC baseline value and the sample value corresponding to the discriminator trigger.
- The **anode/dynode relative gain** is found by transmitting both waveforms for an ensemble of non-saturating pulses. This could be an automatic feature in that

the occasional large but nonsaturating pulse, as measured by ADC result, leads to transmission of both waveforms. This may expected to be quite stable.

- The **internal OM clock drift** must be measured with sufficient precision and accuracy such that the leading edge of any PMT signal can be determined to within one nanosecond relative to any other OM in the vicinity, with perhaps somewhat larger tolerances for distant OMs. The OM internal clock drift over the calibration interval should not be too large relative to the accuracy requirement. Thus if the OM internal clock stability is 10^{-8} over one second, then the drift error would be 10 ns, easily corrected for. If the stability were, say, only 10^{-6} in one second, then the correction would be 1000 ns, too large to permit reliable reconstruction at the one ns level; in this case, more frequent drift measurements would be needed (very unlikely).

  The internal clock drifts must be measured by transmitting to each OM a repetitive electrical pulse referenced to a master surface clock. The repetition rate obviously needs to match the observed drift of the ensemble of OM internal clocks, and the timing noise inherent in this master pulse should of course be less than one nanosecond. The transmission of this pulse will be by optical fiber first to the LSM, then to each OM by the coaxial cable linking OM and LSM. The PMT does not need to be part of this calibration, as the transit delay from photon conversion to electrical pulse is quite stable, and varies little from one PMT to the next.

  Needless to say, the OM internal clock drift calibration is crucial, and must be made highly robust against error or single point failure (SPF). The timing delays of a particular OM relative to its neighbors may be determined by the optical beacons *in situ*. The network of optical beacons can also provide a secondary method of internal clock calibration.

- An **SPE reference template waveform** for each PMT will be valuable. The PMT SPE reference waveform is provided as an automatic result of transmitting the random prescaled hit waveform. Some care may be needed to distinguish between SPE pulses and the relatively rare complex waveform that may appear by chance. SPE reference waveforms may be separately defined over different time-scales to monitor PMT gain or discriminator drifts.

- The **PMT singles hit rate** is perhaps the most revealing OM behavioral characteristic that will need monitoring. In addition to providing a sensitive indicator of overall OM stability, monitoring this may reveal information about system behavior, correlated noise sources, and conceivably even physics signals.

7.3 Local Substring Module

The primary motivation for a Local Substring Module (LSM) is to reduce substantially the mass (and costs) of cables/fibers running from surface station to the ensemble of OMs. In other words, the main function is to provide power distribution and two-way data multiplexing/transmission. It should be a relatively compact device, perhaps the size of a car battery. While the use of LSMs is essential in water, it may also be quite cost effective in ice. A secondary function of the LSM could be to provide a loose local coincidence for trigger purposes, as discussed in the next subsection.

The digital OMs are connected to the LSM via a short length of coaxial cable. The coaxial cable delivers LV power to the OM from the LSM, and supports robust digital data transmission in both directions. The cable length is short enough that it can sustain comfortably the data bandwidth necessary without errors. The LSM receives data from a small ensemble of local OMs and assembles packets for transmission to the surface station via high-bandwidth optical fiber. The LSM must also transmit slow control data and a time-stamp calibration signal to the OMs.

The main objection to the use of LSMs might be the dozen or so penetrators, which can leak, thereby leading to an SPF mode of non-negligible concern. Given the unpleasant experience of the DUMAND group in this regard, this is a preeminent Quality Assurance (QA) issue. The reliability of the penetrators will be a major effort in the LSM task. Confining the LSM to a relatively small number of OMs mitigates against the consequences of LSM failure.

It is conceivable that pressure-tolerant electronics could play a role here, permitting the LSM to be entirely filled, in principle, with a dielectric liquid known to be stable and inert. In hydrostatic equilibrium, water/ice would not enter even in the event of a relatively gross failure of a penetrator seal. Non-hermetically sealed silicon integrated circuits should be minimally affected by immersion in an inert dielectric liquid. The capacitance change above the IC surface would be the main effect, but many silicon chips are dipped directly in plastic for protection, as standard practice. Nor would pressurization of the ICs be expected to cause intrinsic problems. Capacitors, and other components will have to be tested. We expect to discover that extensive research has already been done in this area.

It is also conceivable that the communication lasers within the LSM could operate in a pressurized inert dielectric liquid, but that is unknown to us at the moment. Perhaps certain electro-optical modulators will be relatively unaffected by pressurization. Then the lasers could be remote, and a purely digital communication mode may work very well (even if the analog S/N proves to be insufficient). The block diagram for the LSM is given in figure 3.

7.4 Trigger and System Issues

The most flexible trigger options would exist in a system architecture permitting all coincidence requirements to be defined at the surface station. We cannot fully explore this broad topic at this stage.

However, the relatively high PMT singles rates in Lake Baikal have led the BAIKAL group to arrange a pair-wise physical proximity for the OMs, and a local pair-wise coincidence requirement. This does indeed provide very substantial reductions in data flow, but at the cost of either a somewhat smaller sensitive volume, or an increase in OM number by a factor $\sim \sqrt{2}$.

A local coincidence requirement may reduce the "raw hit" rate from ~20 kHz (8" diameter PMT in the ocean) per OM to ~40 Hz per OM pair, assuming random coincidence and 100 ns coincidence width. This very wide coincidence gate ensures that no real photoelectron signals will be lost, and still reduces the data transmission rate enormously. There is reason to believe that correlations do exist, and that the coincidence rate will therefore be higher than the purely random coincidence rate. Although these calculations should be taken therefore as lower limits, the reduction factors are surely representative of the benefit obtainable.

In an ocean-based array with 5000 OMs, the raw hit rate drops from $\sim 10^8$ Hz to $\sim 10^5$ Hz. In ice, the reduction is dramatically larger: the pair rate drops to ~0.1 Hz, and to ~250 Hz for the km^3 array. In an ice setting, an additional motivation for geometrical clustering and pair-wise coincidence would be to provide a "supernova" triggering capability with extremely low background noise rates.

In any local pair-wise coincidence configuration, the LSM would become an important element of the trigger scheme. The signal indicating a "hit" would be transmitted by the OM to the LSM after a convenient fixed delay, where elementary coincidence requirements would be imposed. The hit signal could be easily superimposed without interference on the digital data stream – for instance, by increasing the amplitude of the bit signal closest in time to the fixed delay. Synchronizing the hit signal to the bit signal introduces a 25 nsec quantization in the coincidence requirement – not a problem, as this coincidence will be purposely made very loose.

Other variations are possible. For instance, a local pair-wise coincidence event, with the wide ~100 ns coincidence gate, could cause a momentary relaxation of other pair-wise coincidence requirements associated with that LSM. The LSM would then transmit all data occurring within the 100 ns (or more, if desirable) of the gate interval, independent of the paired-OM coincidence requirement. After the gate interval elapses, the LSM would return to the paired-OM coincidence quiescent state.

In this "relaxed coincidence" scenario, perhaps most real but unpaired Čerenkov SPE signals could be included in the reconstruction process for a track. As desired, the noise rate would

be vastly reduced, and at the same time the sensitive volume would not be significantly affected since real muon tracks are very likely to produce pairwise coincidence signals for the OM pairs that lie nearest the track. This intriguing possibility will be evaluated in the system design effort.

The low data rates implied by a clustering/coincidence arrangement would also make easier the task of building in redundancy in data transmission. For instance, in addition to a dedicated optical fiber link to the surface station, each LSM could have a coaxial interconnection to both proximate LSMs along the string. The sum of all coincidence rates in a given LSM might be in the range of 250 – 1000 hits per second, corresponding to a data rate not exceeding 100 kbytes/second. This amount of data can be transmitted over a coaxial cable from one LSM to the next. In the event of optical link failure, the network would still provide full connectivity and functionality.

Although the bulk of discussion in this subsection has been devoted to the pair-wise coincidence notion, it is not beyond question that this path is the best way. The question of local clustering/coincidence must be resolved relatively early in the system optimization studies. The local intelligence requirements for the LSM, and hence the complexity of design, would be affected significantly by a decision in favor of clustering/coincidence.

7.5 Summary: Digital OM Approach

To summarize this section, the digital OM with ATWR appears to be straightforward technically, appears to meet the broad collection of performance specifications, and is free from heroic engineering tactics. Because of this inherently conservative engineering approach, we believe that this OM design can be more easily made to meet lifetime and reliability requirements. We intend to focus our main effort toward the realization of the digital OM concept and the associated LSM, which would then be able to serve as a performance standard against which other interesting ideas such as analog lasers or electro-optical modulators may be judged.

Finally, we believe strongly that this is an appropriate time to undertake this effort, for several reasons:

- Technology has advanced to the stage such that optimal signal processing can now be attained straightforwardly, without exotic or daring technical approaches.
- The new ideas embodied in this document represent a pathway to superior system performance in many aspects.
- Experience gained with the prototype detectors of AMANDA, DUMAND, BAIKAL, and NESTOR should be available during the engineering stage.
- Performance can be evaluated realistically in test deployments.

- History has shown repeatedly that R&D effort started early enough leads to vastly better optimization in experimental design; conversely, late starts can lead to serious problems due to inappropriate technical choices, poor operating reliability, marginal system performance, higher ultimate cost, and schedule stretchouts caused by rework, ...*etc.*

- Strongly increasing interest worldwide in this emergent field will almost surely lead to the formation in the near future of a strong international collaboration capable of realizing a km-scale neutrino observatory. The new technical advances presented in this document could likely form the underlying basis for such an effort.

8 Progress To Date

8.1 Digital OM Design

A prototype digital OM is currently being developed and constructed at JPL. This effort is supported through FY95 JPL DRDF (Director's R&D Funds) and through FY95 LBNL LDRD (Laboratory Directed R&D); support through these sources is continuing in FY96 as well. The OM contains a standard AMANDA PMT (Thorn EMI 9323) and an extensive complement of active electronics, mainly digital. The architecture is built around the ATWR IC for waveform recording as described above. Most of the digital functions in this prototype will be part of the anticipated km^3 proposal.

If all goes well, this prototype will be deployed at South Pole (see below under "Deployment Opportunities") this winter (1995-1996). The hardware and triggering methods used for this OM are designed to be compatible with the current and planned AMANDA data acquisition system, so that this module can be used as part of the full AMANDA experiment and at the same time show how the digital OM design operates under actual field conditions. For instance, compatibility requires that all power, signals, and communications be accomplished via a single ~2 km coaxial cable; this constraint imposes severe data bandwidth and trigger rate limitations. Nevertheless, we regard the opportunity to gain this experience as invaluable.

The block diagram of the JPL/LBNL OM for AMANDA is given in figure 4. The LBNL ATWR IC is incorporated to provide waveform recording for both anode and dynode signals. The ATWR is read out by an 8-bit microprocessor-controlled ADC, and the information is sent digitally to the surface via one of the coax cables used for all AMANDA OMs. Two-way communication has been demonstrated to work over the 2-km coaxial cable. Instructions can be downloaded from the surface station to adjust operating conditions such as PMT HV, anode signal threshold, and ATWR sampling speed. Power dissipation is ~300 mW, within reach of our ultimate goal of 100 mW.

Generally, the breadboard pre-prototype OM appears to be meeting our expectations extremely well. Figure 5 shows the reconstructed waveform for a 3.5 ns FWHM pulse, injected at the system input in place of the PMT pulse. The OM prototype detected the pulse, captured it with the ATWR, digitized and transmitted the information over 7000 feet of coax to the "base station", where the received waveform was displayed on a PC. For this test, the sampling rate was set to 3 GHz. The reconstructed pulse at the PC is indistinguishable from the original pulse, as measured with a 500 MHz sampling scope.

Figure 6 shows reconstructed waveforms for real PMT pulses, using the blue LED (see next subsection) to stimulate the PMT. The display shown in figure 6 has been configured to present the dynode signal waveform as well as the anode signal; the signals are shown as positive-going pulses, accomplished within the OM using an inverting transformer. The anode signal gives evidence of the onset of saturation effects; whereas the dynode signal is still small and linear. The OM operating conditions for this figure were chosen for visual emphasis. The OM itself is shown figure 7, resting on 2 km of coax cable.

For this first field application, several limitations had to be accepted because of schedule pressure and resource limitations. We have chosen not to include a clock counter, as absolute timing will be provided by the AMANDA clock system. Although desirable, no SPE recognition has been attempted; the entire waveforms will be transmitted. This leads to trigger rate limitations if deadtime is to be minimized. Because the cable length in the initial AMANDA test deployment is extremely long, ~2000 m, the data transmission rate must be kept quite low because of cable dispersion. It is worth noting that this rate constraint will be absent in the system configuration we favor since the cables will be less than 100 m long between the OM and the LSM.

8.2 Optical Beacons

We are constructing beacons based on the blue GaN LEDs developed by Nichia Chemical Co. of Japan. Blue LEDs (peak output at 450 nm) based on this rugged material are new items of commerce, and are inexpensive. They are optically quite efficient – more than 100 times brighter than SiC devices, the only other blue LED available [21]. We have shown that the GaN devices are capable of subnanosecond optical pulses. We have developed simple compact pulser circuitry that can produce optical pulses of 3.5 – 5.0 ns FWHM, depending on luminous output. We have also determined experimentally that their luminous output changes less than a factor of two down to temperatures as low as -40°C.

These beacons have been deployed by the AMANDA collaboration in the current campaign (95-96) at the South Pole. Each beacon has one blue LED, circuitry to produce short (~ 5 ns FWHM) pulses to drive the LED, a thick pressure housing, and an optical diffuser to generate more or less spherical photon pulses. Some beacons have filters at 10 nm-wide bands at either 380 nm or 450 nm to permit a rough measurement of the wavelength dependence

of the local optical properties. The circuitry allows LED brightness to be adjusted from the surface, with pulse frequency fixed in advance; by adjusting brightness, all OMs in the array can be used in timing tests to determine the absorption and scattering lengths of the ice, OM separations, etc. In addition, by reversing polarity of the supply voltage at the surface, the LEDs can be made to operate in a non-pulsing DC mode for other purposes.

These beacons offer benefits such as lower cost, greater simplicity and flexibility, and much higher pulse rates than the laser system currently in use. In addition, they require only a simple two-wire link, rather than a fiber optic link between OM and surface. Future development will focus on greater brightness at short wavelengths and shortening of the optical pulse.

8.3 Physics Simulations

It was agreed at the November 1994 km^3 Workshop at LBNL that standard formats for data files should be developed, so that workers at different institutions could exchange files generated by different Monte Carlo codes, run the same set of input particles through different detector configurations, etc.

While there was general agreement on the information that has to be stored at many stages of the simulation process (primary particle generation, trigger generation, track reconstruction, etc.), it proved more difficult to choose an efficient way to store and then accurately propagate Čerenkov photons. A conceptual change in the methods for handling particle tracking and Čerenkov photon propagation was required in order to make a sufficiently fast and accurate simulation at the km scale.

This change involved breaking the problem into two parts which are handled by separate programs. First, a small scale Monte Carlo program is used to simulate, step-by-step, the generation, propagation and detection of Čerenkov photons from 1 m segments of muon tracks and from electromagnetic or hadronic showers. This small scale program takes into account secondary particle generation (bremsstrahlung, pair production etc.) as well as the detailed optical properties of water/ice and photomultipliers of given types. Its output is two sets of distributions: i) 'muon distributions' for muon energy loss and small-angle scattering over 1 m track segments as a function of muon energy, and ii) 'OM hit distributions' for the average number of photoelectrons, and their times-of-arrival, as a function of the energy deposited in the track segment or shower and four parameters which determine the geometrical relationship between the photomultiplier and the track segment or shower. These distributions are stored as arrays which are then used as look-up tables for the actual km-scale Monte Carlo. This approach avoids the CPU and memory intensive process of detailed step-by-step particle tracking and photon generation, propagation and detection at the km scale.

The success of this scheme lies in making accurate and detailed muon and OM hit distri-

butions of manageable size. Work has been progressing in this direction and, at the same time, on the actual km-scale Monte Carlo which has been divided into 5 sequential stages: i) primary particle generation, ii) particle tracking and energy deposition (using the muon distributions), iii) photon propagation and OM hit generation (using the OM hit distributions), iv) trigger and event generation, and v) track reconstruction. The overall structure and the information passed from one stage to the next have been sufficiently defined so that each stage can be developed more-or-less independently of the others.

9 Specific Objectives and Responsibilities

Our primary goals are the design, construction, and commissioning of a new generation of OM and related system electronics such as the LSM. Subsequent goals will focus on the the construction and deployment in water and/or ice of a substring with prototype OMs. The effort divides naturally into three more or less sequential phases, as indicated. The first phase is expected to take not more than 1.5 years, with the two remaining phases about one half year each. The cost estimation and realistic schedule development for each phase are under active elaboration. The first two phases are defined explicitly in this section; the third phase is discussed separately in section 10.

The topic of Quality Assurance (QA) is mentioned first, because of its underlying and pervasive role in all efforts we propose to undertake. The issue of QA affects the engineering design approach, mitigating against exotic or aggressive tactics. QA affects technological choices, particularly with regard to packaging and interconnects, and it is certain to influence component choices. Strict attention to QA may increase costs during the initial design stage, but can repay the investment well if re-design phases can be avoided later. Of course, the most painful cost of poor QA would be widespread failure after deployment. JPL deals with QA as an intrinsic part of spacecraft design and operation, and has accumulated decades of experience in this area. Recent NASA trends have made cost control a foremost goal; it appears that the level of QA we desire can be affordable.

Institutional responsibilities are indicated in each subsection heading, with primary responsibilities shown in italic. It is expected that additional research groups will join as this Letter of Intent evolves to a proposal; however, we have not attempted to involve the entire interested community at this point.

9.1 PHASE I

1. **Task 1: Digital OM Prototype** (*JPL,* LBNL, UH)

   Further OM prototype development will be based on the progress made at JPL and LBNL during 1995. This effort is intended to lead to an advanced engineering prototype

OM in less than two years. By advanced engineering prototype OM, we mean a design that meets all performance specifications for the km^3 scale array, needs no additional functionality, and has been extensively tested; small modifications may occur, however, during the final design and construction phase for the km–scale detector.

Three new OM functions need to be added: dead-time reduction, time-stamping, and single photoelectron pulse recognition. These are discussed below in the broader context of the OM task.

(a) **ATWR IC:** *(LBNL)*

- Further development of the ATWR IC to integrate more control functions internally. This should reduce the burden now placed on the control microprocessor.
- Dead-time reduction by toggling between the two independent sections of the ATWR, so that while one section is occupied with digitization, the other section is available for subsequent pulse recording. Clearly, this new ATWR function is most naturally realized with integrated control logic.
- Further development of the ATWR IC to increase analog readout speed to ~10 MHz. This is primarily a question of output buffer amplifiers speed and settling time, and is also connected to the next point.
- Attention to the ATWR – ADC interface to optimize accuracy and baseline stability. This may involve the first point as well, integration of more control functions into the ATWR.

(b) **Time-stamping:** *(JPL)*
This is the second function not present in the current OM design. This involves the integration of a stable local clock and 32-bit counter, to provide the time-stamping feature. Due to the random time relationship between the PMT pulse and the clock, capture of the instantaneous clock value and association with the ATWR edge is non-trivial.

(c) **Single Photoelectron Pulse Recognition:** *(LBNL)*
This is the third OM function which does not now exist. This function may be implemented either as an algorithm residing within a microprocessor, or as a hardware test of PMT comparator behavior. Simulations of various approaches will be surely be helpful, and can also be tried out with actual hardware. While the technical approaches for SPE discrimination appear simple enough, it is expected that evolution of ideas and implementation will occur before the final solution is obtained. We expect to pursue this topic actively in the immediate future.

(d) **PMT HV:** *(JPL)*
Further evolution of the PMT HV DC – DC converter, whose manufacturer is quite willing to provide a more optimized design for us. This may entail mainly power dissipation reduction, physical size reduction, and QA. Because HV com-

ponents can exhibit higher failure rates if not conservatively implemented, this part represents an obvious important QA target.

(e) **System Control & Data Transmission:** (*JPL*, UH)
The increased functionality of the OM will require more extensive control circuitry and perhaps greater microprocessor performance. Modification of the digital transmission section to reach ~20 MHz bit-rates should be straightforward since the coaxial cable between the OM and the LSM are short. The 20 MHz rate corresponds to the internal microprocessor clock, and should be an easy target for such short cables.

(f) **Digital OM Test Program:** (*JPL*, UCB, UCR, UH, LBNL)
Testing of the prototype stages will entail many different kinds of performance evaluations, and it is our intention to undertake this very substantial activity in several institutions.

The product of the this task will be twelve OMs, meeting final specifications, and ready for inclusion in a test string deployment.

2. **Task 2: LSM Development** (*JPL*, LBNL, UCB)

In most respects the LSM is a rather straightforward device, but since it must meet extremely demanding reliability requirements, QA will be a major component of the LSM task. With regard to electronic functions and communications components, contemporary technology should easily meet our requirements.

(a) **LSM Electrical Design:** (*JPL*, UCB, LBNL)
The LSM handles the basic information transmission function between OMs and the surface station. This involves digital data reception from several nearby OMs via coax, data buffering and multiplex transmission via optical fiber to surface. In addition, the LSM must receive slow control commands from the surface, distribute commands appropriately to the OMs, provide power distribution to the OMs, and tend to a few internal housekeeping functions. In general respects it resembles the DUMAND string controller. Redundancy and other QA design techniques will be incorporated as appropriate.

(b) **LSM Mechanical Design:** (*JPL*, UH)
The LSM housing will need to be designed and prototyped. This will include very detailed investigation of electrical and optical penetrators. Experience obtained by the DUMAND, AMANDA, NESTOR, and BAIKAL collaborations will be sought and evaluated. Consultations with vendors, perhaps improvements of contemporary designs, and finite element modeling of structural aspects may be deemed necessary. A reliability analysis will be made of the structural integrity against long-term leaks.

(c) **Pressure-Tolerant Electronics:** (*UH*, JPL)

The feasibility and potential benefit of pressure-tolerant electronics will be explored. First, a search will be made to determine if some factor exists that would rule out this option. This will include as complete a search of open literature as possible. If no such factors are identified, then an assessment of feasibility and value of a pressurizable LSM would be undertaken. Finally some tests would be made.

At some point in mid FY96, we would expect to be able to know enough to make a decision. It may turn out that, by a combination of factors, the reliability specifications can be met without pressurization.

(d) **LSM Test Program:** (*JPL*, LBNL, UH)
Intermediate and final engineering prototypes will be tested for mechanical integrity and electrical performance under pressure. Evaluation will involve disassembly, microscopic inspection for seal damage, and chemical tests for miniscule leaks.

The product of this task will be two final prototype LSMs ready for inclusion in a test string. One LSM would be a spare, the other would be deployed.

3. **Task 3: GaN LED Optical Beacon** (*LBNL,* UCB)

Initial work to develop pulsed optical beacons using new blue GaN LEDs has been quite promising. The time resolution of optical pulses has been measured at the SPE level with a very simple free-running oscillator circuit. The measured response is 3.5 – 5ns FWHM. Earlier work with high-performance bench pulse generators has shown that the GaN LEDs are capable of at least 0.3 ns FWHM. Some further work here is needed to optimize the pulser circuitry, to reduce the response by a factor of two or three, improve the mechanical housing design, and perform a QA engineering process.

One of the more challenging aspects has been to obtain an efficient optical diffuser that can convert the relatively well-focussed LED beam into a nearly isotropic spherical wave. The versions currently deployed at the south pole are equipped with 0.75" diameter Delrin balls drilled out so as to receive the beam within an acrylic light guide. The Delrin balls do give reasonably good isotropy, but appear to absorb a large fraction of the light. It may turn out that better performance can be achieved by mounting several LEDs in the surface of a translucent sphere with good scattering properties and low absorption.

The product of this task will be optimized LED beacons suitable for deployment in ocean or ice. The number of beacons produced and tested will be 10.

4. **Task 4: System Aspects** (*LBNL,* JPL, UCB, UCR, UW, UH,.....)

As noted earlier, the system implications for the km–scale detector cannot be ignored during a technology development phase. Physics and trigger simulations, clustering,

impact of SPF modes, real-time data processing are the major components which must be thought through.

We will install Monte Carlo simulation code on either the CalTech Paragon or JPL T3D supercomputer, a task currently supported by the Cal Tech President Discretionary Fund, to assist in the design of the km^3 detector. The result of this experience should help provide the basis for the preparation of a proposal for the full km^3 detector.

The product of this task will be a specific primary model and an alternate model for the physical configuration of the km–scale array, trigger and data acquisition systems, and rough evaluations of the expected performance.

9.2 PHASE II

1. **Task 5: Test String Development (UH, UW, UCB,.....)**

   A test string is composed of a number of OMs in the range of six to ten, the mechanical support structures that hold the OMs securely and safely, support cables and weights, an LSM, information cables (fiber optics), power cables, various monitoring systems for pressure, temperature, position (and perhaps angle), optical beacons, and appropriate interface systems at the surface station.

   The string development task is specifically for test deployments of final engineering prototypes. While the specifics of this task naturally depend somewhat on the test deployment opportunity that is ultimately chosen, it is not expected that the cost of test string development will depend much on the deployment *milieu.* On the other hand, costs for different deployment scenarios vary considerably.

   The product of this task will be an operational string with six to ten OMs ready for deployment testing.

10 Deployment Tests - Phase III

Task 6: Test Deployment (UW, UH, UCB,.....)

There appear to be several possible venues for test deployment, with widely differing logistical and practical implications. The optimum choice among these possibilities cannot be made reliably prior to the submission of this Letter of Intent. For example, it is not yet known whether the optical properties of deep ice ($\sim$1500 – 2000 m) are sufficiently good for neutrino astronomy. The deep ice properties should be known reasonably well by March 1996.

Of course, only one of these potential opportunities can be pursued strongly. Clearly, this kind of experience is essential, as it will allow the new technologies to be tried out in actual

field conditions, permitting the recognition and rectification of problems well in advance of the final design phase for a full km^3-scale detector.

The third phase of this work – the test deployment phase – will be defined in the proposal itself, to be submitted during FY96.

Below are listed the areas of current possible interest. Regrettably, there are no freshwater sites in North America of sufficient depth – the deepest, Great Slave Lake in northern Canada, is only 600 m deep.

10.1 Antarctica:

AMANDA has deployed four strings of 20 OMs each to 1 km in the austral summer of 1993-1994. Of the 80 PMTs deployed, 73 are still operational. During the present Antarctic season (1995-1996) the AMANDA collaboration has deployed an additional four strings to a depth of 2 km, with few failures and improved OM performance using Hamamatsu PMTs that are capable of sustained operation at a gain of 10^9. The first generation optical beacons have also been deployed as well, and are working as expected. The collaboration is funded to prepare and deploy more strings in future years.

The start of hole drilling this year was delayed due to technical problems, but eventually reached a drilling rate in excess of 1 cm/sec, yielding a completion rate of one deployed string per week. The maximum overpressure observed during freezeback was 5700 psi, well within the pressure rating of the glass pressure housings. Highly accurate pressure sensors permit the determination of depth to within a fraction of a meter. A laser/optical fiber calibration system enables the accurate measurement of the fixed relative locations of OMs.

We expect that the more sophisticated OMs and electronics developed as a result of this effort could be installed in the ice during future AMANDA deployments. Perhaps the main reservation as to an ice deployment is the impossibility of retrieval.

10.2 Ocean Testing at the DUMAND site

Since 1990, the DUMAND Collaboration has conducted nine significant at-sea test, site study and deployment operations, not counting more frequent test operations using small craft in local waters. This base of experience greatly enhances confidence that a deep-ocean based detector is both viable and economical, and represents an valid option for large-area neutrino detectors in the near future.

One of the greatest concerns among outside observers has been the perceived difficulty of managing cumbersome and delicate array elements during deployment operations. However, the deployment of a full-scale DUMAND string (450 m long, complete with anchor base,

flotation, 24 Optical modules and a central electronics module) in December, 1993 proved that such operations can be carried out with great likelihood of success. In fact, the actual deployment operation proceeded rapidly and without significant problems, once all required equipment (both underwater and shipboard) was finally ready. This was in part due to the extensive experience of leading members of the DUMAND team, acquired in previous operations over the years.

Ship Requirements:

Table 2 describes the salient features of vessels used for DUMAND operations. The *R/V Moana Wave* has been used several times by DUMAND and is the most readily available vessel, since it is based in Hawaii and not heavily used. The *R/V KOK*, also based in Honolulu, is another option. The *R/V Thomas G. Thompson* (University of Washington), used in the 1993 DUMAND deployment, is the most highly capable vessel considered but might be difficult to book, since it does not normally operate in Hawaiian waters. The *R/V Laney Chouest*, a civilian vessel contracted to the US Navy as mother ship for its research submersibles, is in many ways an ideal ship for our purposes. The Navy has expressed willingness to make the ship available for scientific support work, but can no longer afford to pay the costs of such operations as training time; since the *Chouest* is berthed in San Diego, its effective cost can thus can be quite high if used in Hawaiian waters (although if test operations are conducted off California their costs would be much lower). The commercial work boat *M/S Noho Loa* is an example of a class of smaller vessels which may be adequate for early stages of km^3 OM testing, are readily available, and relatively inexpensive, although with limited capabilities.

Testing operations should require a minimum of one week and a maximum of two weeks of ship time. Approximately 10 hours are required to reach the DUMAND site from Honolulu. The advantage of performing this transit is that the site provides full ocean depth (5 km), and has been extensively studied. Features such as water clarity, bottom topology and soil properties, local subsurface currents and temperatures, are all well documented. However, shallower sites closer to Honolulu could be used for preliminary testing operations with attendant savings in ship time requirements. Upon arrival at the site, one should assume about 24 hours for completion of shipboard preparations, and 48 hours for actual deployment and testing operations. It is possible at some seasons that local weather conditions will render deployment operations unsafe for several days at a time (although Hawaiian waters are as good or better than any US coastal waters in this regard), so any vessel used should be leased for up to an extra week beyond the time estimated for planned operations.

Because shipboard operations are expensive (both in terms of direct leasing costs, and in terms of personnel time consumed in preparations), it is essential to ensure that the equipment to be tested will not fail immediately upon exposure to high pressure. Such testing can be performed near CalTech, at the Arctic Submarine Laboratory, operated by the U.S. Navy at Point Loma, California. This facility has a very large pressure test chamber providing up to 10 kpsi. All of the DUMAND housings and penetrators were tested here before the 1993

deployment operation. (We should note that, unfortunately, some DUMAND penetrators had to be replaced *after* the pressure test, a violation of good practice, and subsequently failed at sea, destroying the string electronics module).

All of the vessels listed have a stern-mounted "A" or "U" frame of adequate capacity in place as standard shipboard equipment. Test strings can be transported and deployed from a refrigerated 24' container (which provides suitable environment for the electronics) that can be loaded onto the deck. Additional equipment required consists of a deep sea lowering winch, which can be rented from commercial sources. DUMAND already owns an 8 km electro/mechanical lowering cable, that will allow for both powering up and monitoring string conditions during lowering operations.

At least one acoustical transponder should be attached to the test string. This will allow location and recovery of the string in case the lowering cable fails, or must be cut due to weather conditions or shipboard emergency. Standard commercial transponders provide a "sleep" mode in which battery consumption is minimal until a startup command is received. The same transponders can be used for repeated test operations over a period of up to 5 years without service. In addition, temperature and pressure sensors will be included in the string to allow logging of water parameters and determination of the actual depth of the lowered string.

Mission Planning:

Sea-going operations are similar to space flight operations in that they represent infrequent and costly opportunities to achieve scientific goals. Therefore it is prudent and customary to include a number of pre-mission reviews to ensure effective use of ship time.

In addition, it is essential to establish a chain of command which eliminates ambiguity in the interaction between the scientific team and the ship's crew. One of the participants should be appointed Mission Scientist and will serve as the primary point of contact with the ship's captain during preparations and sea operations. It is important to recognize that, while it is not necessary to adopt a military-style hierarchical structure within the scientific team, marine safety requirements do make it essential to have a single authorized spokesman whose word is final during sea operations. It is critical that all members of the scientific team accept and agree to cooperate with this requirement.

At the time the ship booking is made, a delegation of participants including the appropriate experts should meet with representatives of the ship operators, if possible including the ship's captain to be assigned to the mission. The purpose of this briefing is to make sure there is a clear understanding between the scientific users and the ship operators regarding tasks to be performed, sequence of operations, requirements, limitations, and to identify potential safety concerns.

At this time, the Mission Scientist should prepare an agreed-upon set of Minimum Success Criteria (MSCs) for the sea operation. This document will define circumstances under which

Table 2: Description of ships used in past DUMAND sea operations.

Ship	Moana Wave	KOK	T.G. Thompson	Laney Chouest	Noho Loa
Length (ft)	210	223	274	280	130
Displacement (T)	1853	1961	3250		
Home port	Honolulu	Honolulu	Seattle	San Diego	Honolulu
Operator	U. Hawaii	U. Hawaii	U. Washington	US Navy	"commercial"
Rate/day ($)	14,000	12,000	15,000	2,000	4,800

the results of the operation can minimally justify its cost.

At least one week before the cancellation deadline for the ship booking, a Preliminary Mission Readiness Review (PMRR) should be held. The Mission Scientist will be responsible for conducting this review to ensure that a set of previously defined Go/No-Go criteria are satisfied. Normally this will mean that all required subsystems are ready and operating within nominal limits, and the entire test string is undergoing pre-mission burn-in. Any remaining action items uncovered at this review must include conservative assumptions regarding rate of progress. The purpose of the PMRR is to allow cancellation of the ship booking with minimal cost if there is any significant likelihood the MSCs cannot be achieved. It is most valuable to include at least one person with suitable expertise from outside the scientific team on the PMRR committee, to provide an objective view of the status of preparations.

At least one week before departure, a final Mission Readiness Review (MRR) should be held. This should include participation of the ship's captain or representative. At this time the state of equipment and personnel readiness will be checked against the G/NG criteria. In addition, a detailed Mission Plan should be provided to the ship's operators, and jointly reviewed to ensure no misunderstandings regarding ship capabilities or safety requirements. One important requirement is that any contingency that requires significant change to the apparatus (*e.g.*, opening a pressure vessel which cannot be subsequently pressure tested) after the MRR will cause the mission to be cancelled unless a previously appointed outside reviewer agrees the risk is acceptable.

10.3 Other Pacific Ocean Possibilities:

In addition to the DUMAND site, there exist reasonably deep zones relatively near the west coast of North America, *e.g.*, the Monterey Peninsula in California, from which short shipborne test deployments could be performed with good local logistic support. These potential opportunities will require some time to explore adequately.

10.4 Arctic Ocean:

It appears feasible to arrange a test deployment, possibly of months-long duration, from the surface of a large ice floe in the Beaufort Sea. The Beaufort Sea is located off the north coast of Alaska with a depth of $\sim$ 3000 m. The Beaufort Sea water is extremely clear and comparatively free of biological backgrounds.

The floes can be very large and stable, and the ocean currents are small. The floes are just a few meters thick, permitting straightforward string deployment and retrieval. The string would hang down from the floe but above the sea floor, analogous in geometry to AMANDA. Thus the string could be reeled up as the occasion dictates, and possible failure modes determined. The ability to retrieve easily the test string equipment is an enormous advantage.

Oceanographic experiments are frequently conducted in this manner, and an opportunity may be possible in the time frame of interest [22]. Such a scenario would be conceivable only as an epiphytic activity to the main oceanographic enterprise.

The product of this task will be documented field experience with an ensemble of OMs, an LSM, and related system elements for an extended period of time. If the deployment tests go well, this documented experience would provide evidence that the main technological development phase has been completed.

11 Organization

The development of this new technology involves a number of different institutions, each bringing particular expertise and capabilities to the overall project. Similarly, there are a variety of different tasks that must be accomplished and interleaved for a successful conclusion. It is imperative that an organizational structure be developed that incorporates clearly defined responsibilities and a high level of coordination.

We envision a structure consisting of the following components – funding agency, lead laboratory, participating institutions, an advisory board, lead scientist/project director, project manager, and task leaders. While this structure may seem elaborate initially, the number of institutions and participants in the project may grow to the extent that a formal organization such as this would be inevitable. The responsibilities are summarized as follows:

- **Funding Agency**

  The funding agency, DOE, will provide general oversight, review, monitoring, and programmatic guidance.

- **Lead Laboratory**

The lead laboratory, LBNL, assumes primary management responsibility, and administrative and fiscal responsibility. It appoints the lead scientist, in consultation with the advisory board and the funding agency. The lead laboratory will also ensure that progress reports and other appropriate documentation is provided to the funding agency on a timely basis.

- **Participating Institutions**

  The participating institutions will make available the resources needed for accomplishing the individual tasks. Key participating institutions with major responsibilities are the DOE, JPL, and LBNL. Additional participating institutions are currently the University of California at Berkeley and Riverside, and the Universities of Hawaii and Washington.

- **Advisory Board**

  The members of the advisory board are chosen by the participating institutions, in consultation with the lead laboratory and lead scientist. The board provides advice to the lead scientist and lead laboratory management on all aspects of the project, including inter-institutional relationships.

- **Lead Scientist**

  Overall technical direction is provided by the Lead Scientist. He/she will appoint the project manager, in consultation with lead laboratory management. He/she will act as spokesman for the project to the scientific community. The lead scientist will organize and coordinate the responsibilities of the participant institutions, and keep the advisory board informed of progress and concerns. He/she will work together with the project manager to define the overall project management plan.

- **Project Manager**

  Responsibility for day-to-day management of the project rests with the manager. The functions of the project manager are to implement the management structures needed for successful completion of tasks; prepare and maintain the management plan, schedule, and budget; prepare the work breakdown structure; supervise task leaders, engineering and any administrative staff; conduct design reviews, prepare QA procedures, and ensure adherence to milestones. The project manager must arrange sufficient assessment procedures that deviations from the plan are recognized rapidly and responded to expeditiously.

- **Task Leaders**

  Task leaders assume responsible for design, development, construction, and cost control of items in their assigned Task. They provide technical leadership and quality assurance within their task. They assist the lead scientist in making decisions affecting the project as a whole.

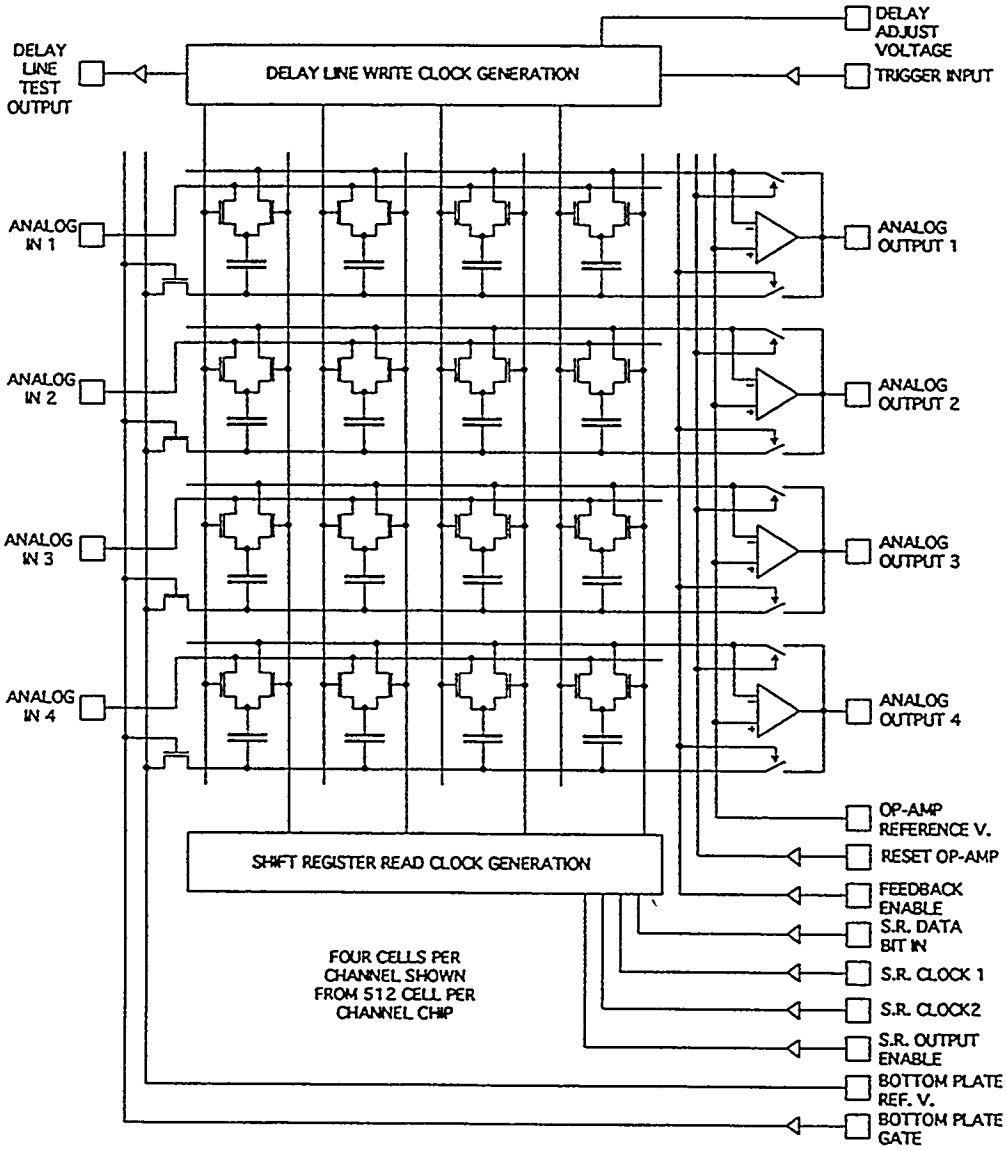

Figure 1: Schematic architecture of ATWR.

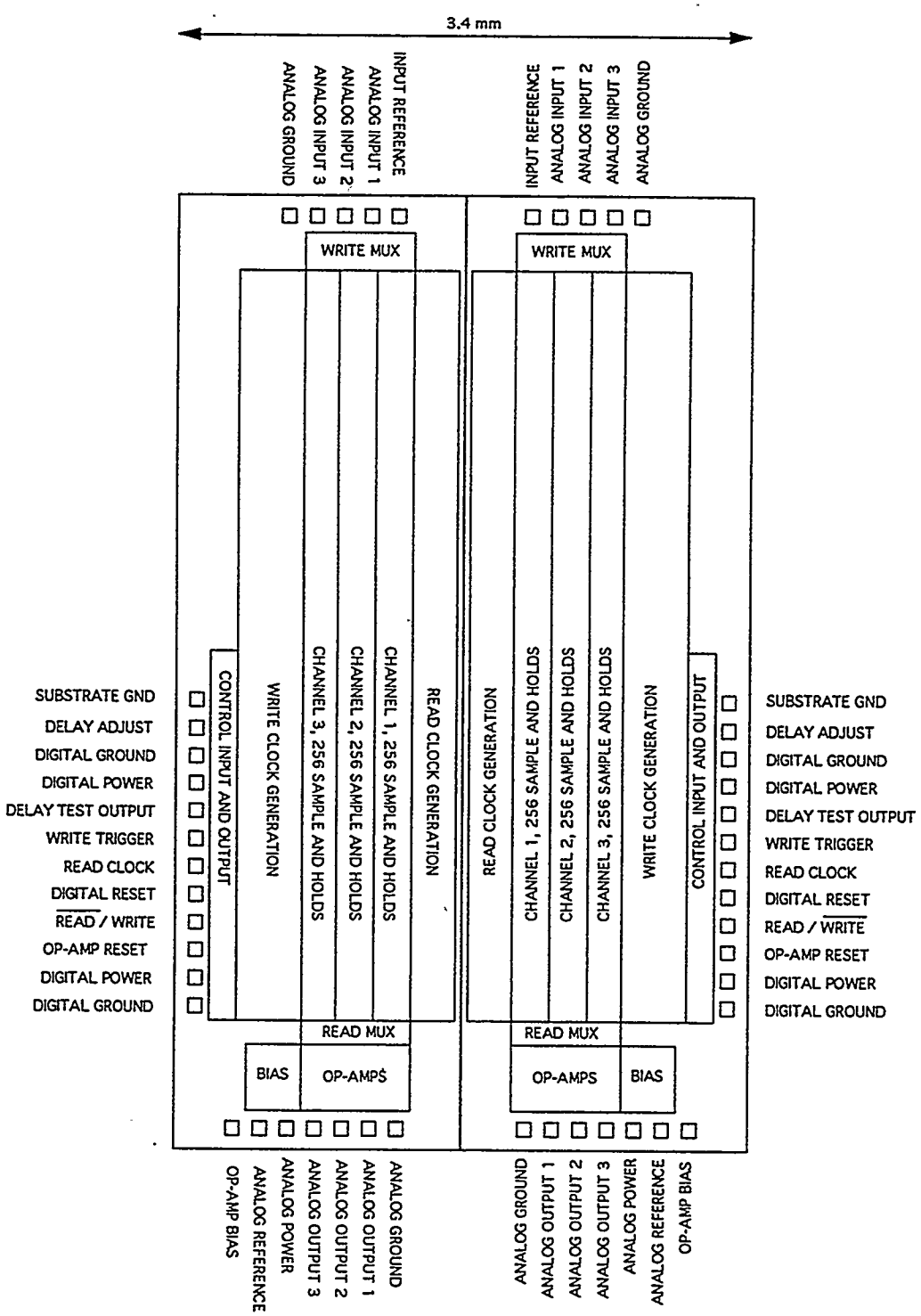

Figure 2: ATWR floor plan.

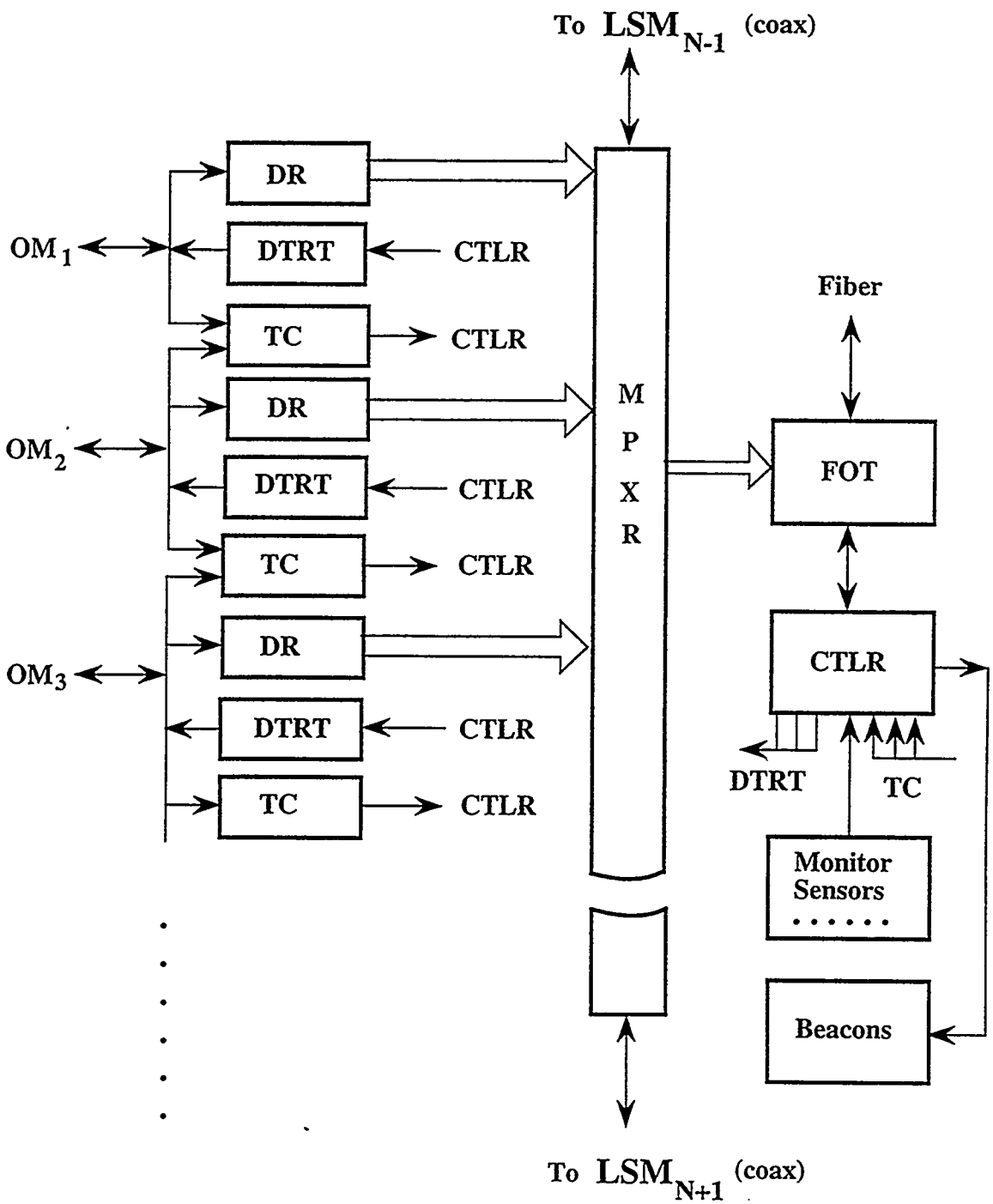

Figure 3: LSM block diagram.

DR = Data Receiver, DTRT = Data Transmitter and Reference Time,
TC = Trigger Coincidence, MPXR = Multiplexer, CTRL = Controller.

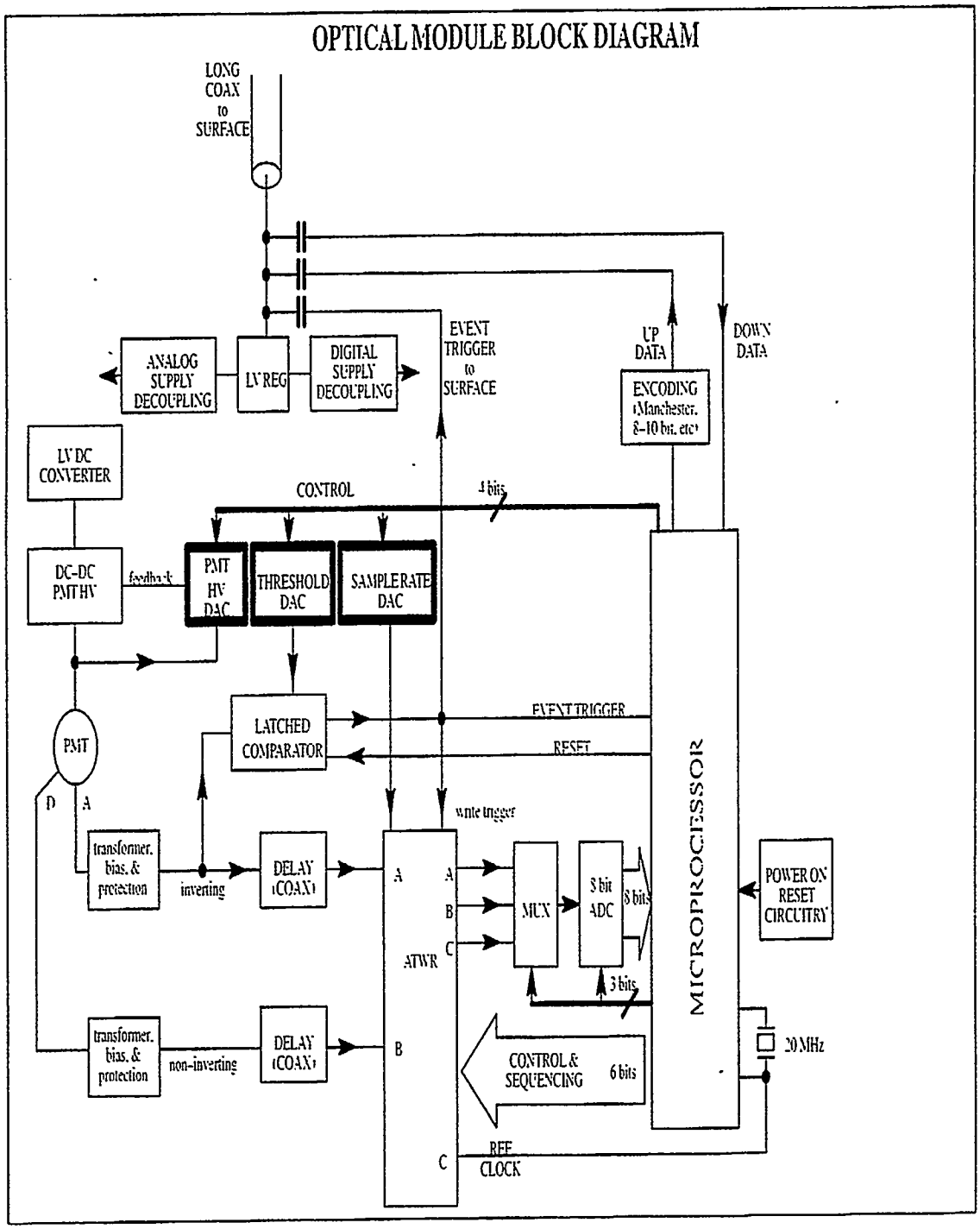

Figure 4: OM block diagram.

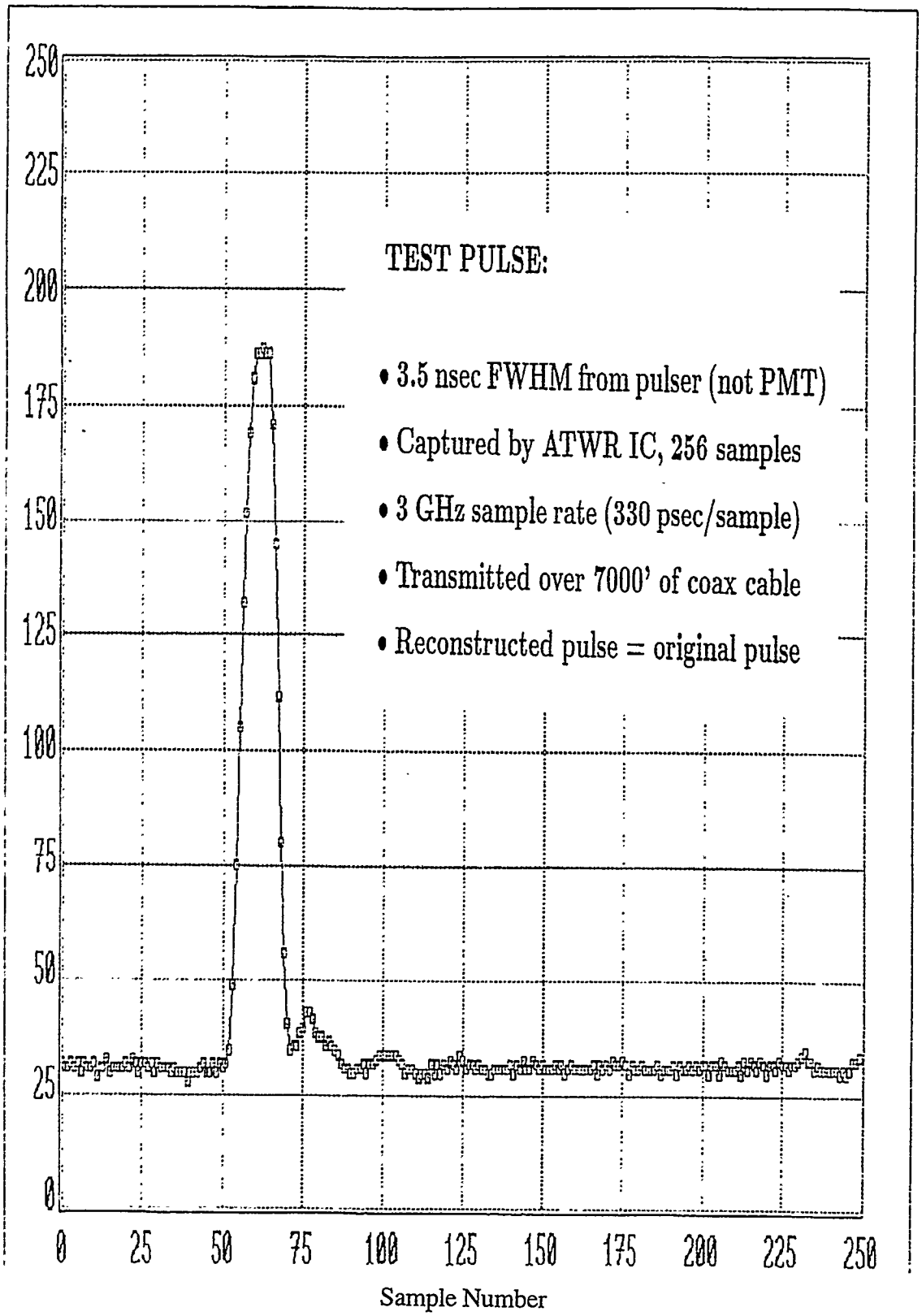

Figure 5: Reconstructed pulse waveform.

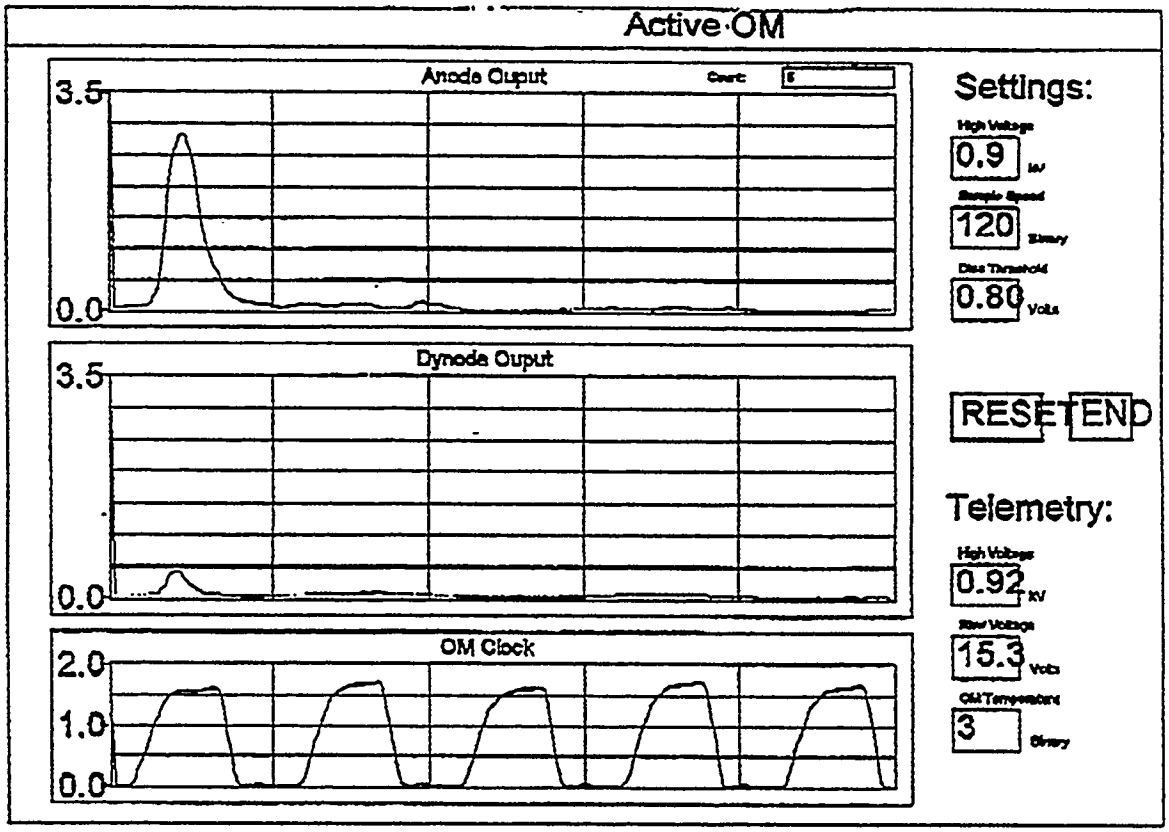

Figure 6: Reconstructed PMT waveform.

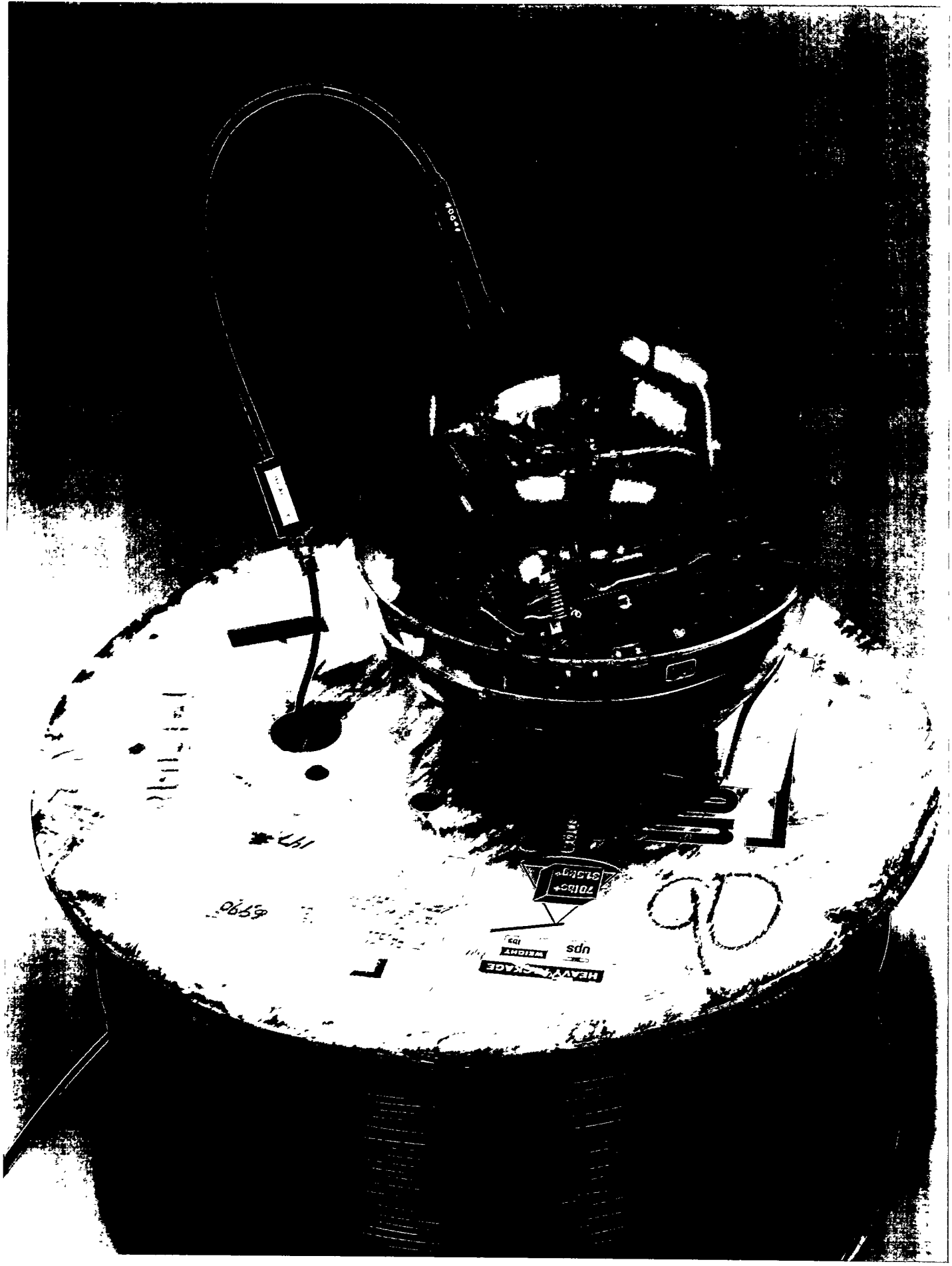

Figure 7: The active optical module prototype, with 2 km of coax.

References

[1] C. Athanassopoulos *et al.*, *Phys. Rev. Lett.* **75**, 2650 (1995); also J. E. Hill, *Phys. Rev. Lett.* **75**, 2654 (1995).

[2] S.W. Barwick *et al.*, *J. Phys. G* **18**, 225 (1992); P. Askebjer *et al.*, *Science* **267**, 1147 (1995).

[3] The BAIKAL Collaboration (G.V. Domogatskii *et al.*), *Nucl. Phys. B (Proc. Suppl.)* **19**, 388 (1991); The Baikal Collaboration (C. Spiering *et al.*), *Nucl. Phys. B (Proc. Suppl.)* **14**, 51 (1990).

[4] A. Okada *et al.*, *Proc. Workshop on High Energy Neutrino Astrophysics* (V.J. Stenger *et al.*, eds., World Scientific, Singapore), p. 277 (1992); The DUMAND Collaboration, *Phys. Rev. D* **42**, 3613 (1990).

[5] The NESTOR Collaboration (L.K. Resvanis *et al.*), *Proc. Int. Symp. on Neutrino Telescopes* (Venice, Italy, 1992) p. 321 (1992).

[6] T.K. Gaisser, F. Halzen, and T. Stanev, *Phys. Rep.* **258**, 174 (1995) and references therein.

[7] M. Punch *et al.*, *Nature* **358**, 477 (1992).

[8] M. Catanese *et al.*, "Detection of Gamma Rays with E > 300 GeV from Markarian 501", Preprint (1996).

[9] F. Halzen, M. Kamionkowski, and T. Stelzer, *Phys. Rev. D* **45**, 4439 (1992).

[10] F. Halzen, *Nucl. Phys. B (Proc. Suppl.)* **38**, 472 (1995).

[11] G. McGrath, Ph.D thesis, University of Hawaii, (1994).

[12] J. Learned and S. Pakvasa, *Astropart. Phys.* **3**, 267 (1995).

[13] The AMANDA Collaboration (R. Wischnewski *et al.*), *Proc. 24th Intern. Cosmic Ray Conf.* **1**, 661 (1995); see also F. Halzen, J. E. Jacobsen, E. Zas, *Phys. Rev. D.* **49**, 1758 (1994).

[14] C. D. Dermer and T. J. Weiler, "Cosmological Models of Gamma-Ray Bursts", Preprint astro-ph/9508047 (1995).

[15] C. Kuo *et al.*, *Earth and Planetary Sci. Lett.* **133**, 95 (1995), and references therein.

[16] L. V. Volkova, *Yad. Fiz.* **31**, 784 (1980) [*Sov. J. Nucl. Phys.* **31**, 1510 (1980)].

[17] V. Agrawal, T.K. Gaisser, P. Lipari & T. Stanev, in preparation.

[18] The AMANDA Collaboration (P. Askebjer *et al.*), *Science* **267**, 1802 (1995); The AMANDA Collaboration, *J. of Glaciology* **41**, 445 (1995).

[19] The AMANDA Collaboration (S. Tilav *et al.*), *Proc. 24th Intern. Cosmic Ray Conf.* **1**, 1011 (1995).

[20] The DUMAND Collaboration (J. Babson *et al.*), *Phys. Rev.* **D42**, 3613 (1990).

[21] H. Morkoç and S. N. Mohammad, *Science* **267**, 51 (1995).

[22] R. C. Spindel, Applied Physics Laboratory, University of Washington, Seattle, WA; and J. Wilkes, Dept. of Physics, University of Washington, Seattle, WA., Private Communication (1995).

[23] T. Tsang, V. Radeka, T. Srinivasan-Rao, and W. Willis, *Symp. Detector R & D for the Superconducting Super Collider, Fort Worth, Texas, 1990*, edited by T. Dombeck, V. Kelly, and G. P. Yost, (World Scientific, Singapore, 1990), p. 491.

[24] RD23 Project - CERN, Birmingham, EPFL/Lausanne, INFN Lecce, Florence, Milano, GEC - Marconi, Imperial College, Lund, Siegen, RAL Collaboration; G. Stefanini, spokesman.

[25] D. R. Nygren, Internal LBNL/INPA Note, May 3, 1995

[26] T. Tsang, and V. Radeka, *Rev. Sci. Instrum.* **66**, 3844 (1995).

[27] MQW literature.

[28] United Technologies Photonics.

A Background on JPL and the LWG

JPL became aware of neutrino astrophysics through the efforts of Prof. Kwan Wu Lai of the University of Arizona during his tenure at the laboratory as an NRC Fellow. Together with Dr. James Ling of JPL Prof. Lai organized the March 1994 Workshop on Neutrino Astrophysics. This was a highly successful event, attracting an international attendance of over 80 scientists and JPL staff. Dr. Terry Cole, JPL Chief Technologist participated in the workshop and became interested in exploring the potential contributions JPL might make in an eventual large scale Neutrino Astrophysical Observatory since JPL has played major roles in astrophysical observatories both in space (IRAS, Hubble & COBE) and on earth (Keck Observatory). These roles extended from technology development through project management to data analysis.

Shortly after the Neutrino Astrophysics Workshop JPL held technical discussions with principal investigators from both AMANDA and DUMAND to assess JPL's capabilities in relevant technologies. The consensus of these discussions was that JPL's longstanding expertise in low power / high reliability electronics, quality assurance, optics, systems engineering and deployment of sophisticated sensors in remote and hostile environments could be of substantial value in achieving the goal of a large neutrino observatory.

To pursue this subject further Drs. Cole, Janssen and Ling accompanied Prof. Lai to the Snowmass Conference on High Energy Physics and Astrophysics in July 1994. Dr. Cole made a presentation at that conference expressing JPL's interest in supporting the achievement of the NAO. He suggested that JPL host a Science Working Group to develop technology and initiate system studies for a next generation Neutrino Astrophysical Observatory two orders of magnitude larger than the current detectors such as AMANDA, DUMAND, BAIKAL, and NESTOR. Over 30 participants at Snowmass expressed an interest in participating in such a Science Working Group.

In early August 1994 a subset of the Science Working Group from JPL, UC Berkeley, Riverside, LBNL and UC Irvine convened as the NAO Local Working Group (LWG) under the technical leadership of Dr. David Nygren. The objectives of the LWG are to develop critical path technology for next generation optical module detectors, power system, data system and improved computer models for the NAO. The LWG has met on a nearly weekly basis since August 1994.

In November 1994 JPL committed $150K of its FY '95 Director's Research and Development Fund to begin hardware development of an improved low power optical module. A one year renewal of this award is being submitted for FY '96 funds. In addition a proposal is now pending to the Caltech President's Fund for $100K to begin development of a Monte Carlo simulation of the NAO that will run on the JPL/Caltech parallel supercomputers.

B OM Concept – Analog Data

In our evaluation process that led ultimately to the decision to proceed with a digital OM design, we examined some quite interesting "analog" alternatives that are briefly discussed in this appendix. Despite some appealing characteristics, the performance limitations and/or cost impact of these electro-optical approaches led us to choose the more conventional technology (but with innovative ideas!) described in section 7.

The underlying motivation in an analog OM concept is to recreate at the surface station an accurate real-time representation of the actual PMT signals. Thus all signal processing and time coincidence triggers, *etc.* can be undertaken in the most desirable and convenient location, permitting updates, hardware modifications, and maintenance as necessary. From the systems perspective, this approach may clearly be characterized as "centralized" and is the simplest conceptually.

A "passive" concept, which could retain most of the appeal of the AMANDA concept while avoiding most of the objections about active electronics is described next.

- **Passive OM with Electro-optical Modulator**
  This novel idea takes advantage of the very large frequency bandwidth intrinsic in optical fiber technology, in conjunction with electro-optical modulators to impose information on a reflected photon beam. The origin of this idea probably lies in an R&D activity pursued during the era of the SSC [23]. This concept has been actively taken up again in the context of the LHC [24]. The motivation was to bring analog data directly out of the regions of the detector which would be exposed to extremely high levels of ionizing radiation. The corresponding dose and radiation damage at the SSC would have limited the lifetime and/or reliability of semiconductor-based data transmission techniques.

  As an alternative to the use of semiconductor devices (including lasers) deeply embedded within the complex collider detectors, it was proposed to arrange a laser external to the high radiation fields that would transmit a continuous photon beam via fiber to an electro-optical modulator (EOM) connected to a detector element, *e.g.,* a calorimeter segment. An electrical voltage level comprising the instantaneous analog signal would be imposed on the EOM. The EOM would, in turn, modulate the emergent laser beam in a quasi-linear fashion according to the imposed electrical signal. The emergent beam was then to be carried out of the detector via another fiber to an appropriate photodetector. In this manner, a representation of the original analog signal could be reproduced at a more convenient location.

  Several groups have considered a variation on this scheme which would be more economical in the use of optical fiber [5, 24, 25]. Instead of a second fiber to carry modulated signals away from the detector, the modulated beam is proposed to to be reflected back into and return via the original fiber. Using one fiber for both beams reduces the

required length of fiber by half, reducing both cable mass and costs for this component. Less obviously, it also reduces by half the number of fiber optic penetrators needed.

The EOM envisaged for this purpose is a compact Mach-Zender interferometer employing lithium niobate as the optically active element. It was anticipated (and shown) that the interferometer components would display a much higher tolerance to the high levels of radiation than would typical semiconductor devices. Work has continued on the application of these devices to particle physics, with encouraging results [26]. The anode signal would be applied directly to the modulator, which requires only a few volt signal to reach maximum effect (V_π). Including the capacitance of the modulator itself, about 60 pC charge is needed to reach V_π.

In addition to the Mach-Zender interferometer, a recent technological advance known as multiple quantum well (MQW) device may also serve this purpose, although with rather different underlying physics and performance characteristics [27]. The RD–23 project has concluded that an asymmetric Fabry-Perot electro-absorption modulator (AFPEM), an MQW device, is a better match to the LHC challenges, due in part to its insensitivity to polarization and in part to potentially easier fabrication as a linear array. However, these AFPEM devices are not a commercially available device as yet.

The return beam would be extracted via a splitter to an appropriate photodetector to regenerate an analog signal. Because of the vastly superior bandwidth of an optical fiber relative to coaxial cable, the regenerated signal should be a rather good approximation of the original, remote, PMT anode current waveform. This scheme offers the prospect of an OM (in ice) with no active circuitry, with presumably beneficial implications for lifetime and reliability. In an ocean setting, it will presumably be necessary to employ a DC–DC convertor for the PMT HV.

We regard these emergent technologies as potentially interesting for neutrino astronomy. Nevertheless, there are issues of signal/noise due to laser relative intensity noise (RIN) arising from several sources, and undesirable interactions of the return beam with the laser cavity.

Beyond the technical questions, the issue of cost appears to be the controlling factor at the present stage of commercialization. Current prices for complete pigtailed modulator units are in the $6K range. The volume discount at lot size of 500 brings the price down to $2.2K, still much too costly [28]. Unit price would need to be in the range of $300 to make this technique competitive, since the cost of lasers must be included as well. This potentially interesting scheme must be ruled out on the basis of cost.

Conceivably, it could turn out that the transmission of *digital information* by this technique is much easier, leading to cost reductions and technical simplifications relative to the problems encountered in an analog format. This may have beneficial implications for the digital system design we favor.

- **Optical Multiplexing**
  If some modulator scheme, either analog or digital, turns out to be feasible, the most

natural implementation would be to employ a dedicated fiber to each OM. In an ice *milieu* this may be economically realistic. However, in water the distance between shore and detector will almost certainly be much too large for this approach, and an optical multiplexing scheme will be necessary. Optical multiplexors for digital data transmission/reception do exist and are items of commerce. Intended primarily for dedicated secure high bandwidth commercial applications, the bandwidth is 200 Mbits/sec/channel, more than adequate. Presently, costs for these turnkey systems are very high. JPL has employed similar devices for internal network applications, and has considerable experience with their characteristics.

It is currently possible to multiplex 20 independent two-way links on a single fiber using slightly different wavelengths. The two-way links are established using a set of highly tuned lasers at each end. However, experience with a system composed of a single set of lasers, optical multiplexors and remote modulators has not been reported.

- **Active OM – Analog Lasers inside the OM**

  As the remote modulator concept appears quite expensive, one might consider implanting within the OM a laser capable of analog behavior. Once again, the underlying notion is to exploit the high bandwidth of the laser/fiber combination. The PMT anode signal would be applied (presumably with intermediate active circuitry) to the laser modulation node. Power must be supplied for both PMT and the laser module, and some feedback mechanism is needed for laser stability. As in the case of the modulator, questions about S/N, dynamic range, cost and reliability arise. Recent advances in laser technology suggest that lifetime and reliability will be more than sufficient.

  Here the laser is operated quiescently at low power in the so-called linear range. Analog transmission has been the subject of intense R&D and is an important element in cable TV distribution and long-distance microwave transmitter-antenna links. Commercial high-quality analog distributed feedback (DFB) laser units are available currently at single unit cost of ~$5K, again beyond the reach of a km-scale project. An important issue to be understood is the practical signal/noise ratio obtainable within the bandwidth required to transmit PMT signals with adequate time resolution.

  The technical approach and performance of contemporary lasers varies greatly. DFB lasers achieve superior chromatic purity (typical spectral width $\leq$10 MHz), but are expensive and more prone to disturbance from optical feedback (unless isolated with an expensive optical isolator). The more mundane multimode Fabry-Perot (FP) laser diodes are relatively inexpensive and are less prone to optical feedback problems, but yield a smaller dynamic range. The FP diodes may offer adequate performance since requirements on linearity will not be stringent.

  The cost of a laser diode also varies with wavelength. Normally, 1300-nm and 1550-nm FP laser diodes are much more expensive than 800-nm devices. The former is about $1K, whereas the latter is about $0.1K. The transmission loss of fiber at 800 nm is about 3dB/km as opposed to 0.04 dB/km at 1300 and 1550 nm. As a result,

the distance of a link using 800 nm laser diodes should be kept within ~5km. This makes this lower cost device a potentially viable candidate for an ice setting although dynamic range may be marginal, or perhaps even unacceptably small.

- **Optical Power Transmission**
  It is worth noting that it is now commonplace to transmit modest levels of power over a fiber link, in addition to information. Transmitted power at the level of 100 mW over links of a km or so can be accomplished with commercially available 800 nm lasers and GaAs photodetectors. The availability of a wide range of ultra-low power CMOS devices permits considerable functionality even at received power levels much lower than this.

  Thus one may conceive of a system of OMs, each individually powered remotely by a surface laser, generating PMT HV internally from power transmitted over the optical fiber. The connection to the OM would be a single optical fiber. The analog signal could be impressed upon the return beam by modulator, or conceivably by a laser in the OM. Again, S/N limitations, and in the case of a laser, power requirements mitigate against this possible solution.

  If the OM electronics include digital signal processing as discussed in section 7 as well as the PMT HV , then the information can be returned in digital form with much less stringent S/N requirements. In ice, this scheme may be eventually both feasible and cost-effective. In water, the long run to the surface station complicates the technical aspects considerably since attenuation at 800 nm ($\geq$3 db/km) is very high relative to 1300 nm mode or 1550 nm mode (~0.04 db/km). Unfortunately, power conversion is much less efficient at the longer wavelengths. Nevertheless, such a scheme may become interesting in some form in the future.