LBL-37807
UC-414
CONF-9509292--

Lawrence Berkeley Laboratory

UNIVERSITY OF CALIFORNIA

Accelerator & Fusion Research Division

RECEIVED
JAN 24 1996
OSTI

Presented at the Workshop on a Large Angle Spectrometer System, Berkeley, CA, September 16–17, 1995, and to be published in the Proceedings

Some Conceptual Designs for a LASSY Spectrometer Magnet

M.A. Green

September 1995

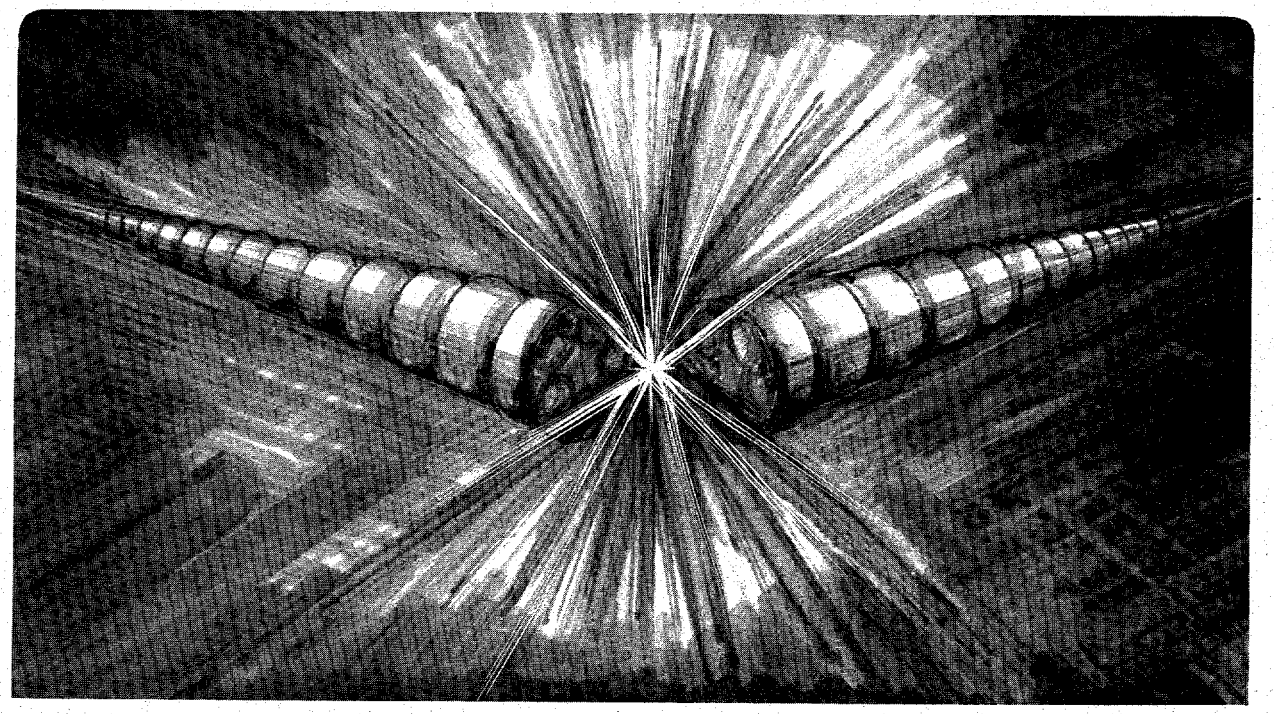

Prepared for the U.S. Department of Energy under Contract Number DE-AC03-76SF00098

DISCLAIMER

This document was prepared as an account of work sponsored by the United States Government. While this document is believed to contain correct information, neither the United States Government nor any agency thereof, nor The Regents of the University of California, nor any of their employees, makes any warranty, express or implied, or assumes any legal responsibility for the accuracy, completeness, or usefulness of any information, apparatus, product, or process disclosed, or represents that its use would not infringe privately owned rights. Reference herein to any specific commercial product, process, or service by its trade name, trademark, manufacturer, or otherwise, does not necessarily constitute or imply its endorsement, recommendation, or favoring by the United States Government or any agency thereof, or The Regents of the University of California. The views and opinions of authors expressed herein do not necessarily state or reflect those of the United States Government or any agency thereof, or The Regents of the University of California.

Ernest Orlando Lawrence Berkeley National Laboratory
is an equal opportunity employer.

DISCLAIMER

Portions of this document may be illegible in electronic image products. Images are produced from the best available original document.

SC-MAG 524
LBL-37807

SOME CONCEPTUAL DESIGNS FOR A LASSY SPECTROMETER MAGNET

Michael A. Green
E. O. Lawrence Berkeley National Laboratory
University of California
Berkeley, CA 94720

September 1995

* This work was performed with the support of the Director of the Office of Energy Research, Office of High Energy and Nuclear Physics, Nuclear Physics Division, United States Department of Energy under contract number DE-AC03-76SF00098.

MASTER
DISTRIBUTION OF THIS DOCUMENT IS UNLIMITED

LBL-37807

Some Conceptual Designs for a LASSY Spectrometer Magnet

Michael A. Green
Lawrence Berkeley National Laboratory
University of California
Berkeley CA 94720

29 September 1995

INTRODUCTION

The LASSY spectrometer is a gas filled spectrometer (hydrogen or helium at a pressure of about 1 torr). The design bending power for the primary bending magnet for the spectrometer will have an induction bend radius product of 2.5 tesla-meters. In order to increase the acceptance of the spectrometer, the bending magnet system must be located close to the target where the desired nuclei are created. The spectrometer magnet system must consist of both bending and focusing elements so that the wide acceptance of particles can be brought to a focus at the analysis point that is down stream from the last magnet element.

In order improve the spectrometer resolution and to catch the shortest lived nuclei, the length of the magnet system must be as short as possible. The length for the LASSY spectrometer magnet system from the target to the analysis point has been set at 2.5 meters or less. To improve the resolution of the spectrometer, the bending angle for bending magnet system must be increased to close to 180 degrees. In order to achieve a large bending angle and a short magnet system length, the bending induction must be above 3 tesla and the focusing elements must be combined with the bending elements. As a result, a LASSY spectrometer will have bending magnet with a bending angle from 140 to 170 degrees. This magnet will be combined with one or more focusing magnets (a straight dipole in some places and a combined function dipole in other places). The result is a single superconducting bending magnet with one or more quadrupoles incorporated within the large angle bending magnet

The LASSY spectrometer magnet system has the following general requirements[1]: 1) The dipole central induction has to be at least 4 tesla over a width of 30 centimeters. In order to keep the magnet length short, a bending induction of 5 tesla was chosen. 2) The uniformity within the pure dipole must be better than one percent over a width of 30 centimeters. 3) The gradient of the quadrupoles should be in the 8 to 15 tesla per meter range over a width of 20 centimeters. 4) The quadrupoles (the combined function dipoles) must be separately tunable from the pure dipole (or dipoles) and each other. 5) It is desirable for the beam to be accessible for collimators or scrapers from the ends of the magnet or from the outside of the magnet.

Table 1 presents the parameters for two configurations of LASSY spectrometer magnets that have been ray traced. The magnets presented in this report are variations of the LASSY-2 magnet configuration. The bend angle for the spectrometer dipole will be 147.4 degrees. The LASSY-2 configuration has two quadrupoles combined with the 147.4 degree bending magnet. The first quadrupole, just down stream from the target, is combined with the first 59.0 degrees of the bend. The second quadrupole is upstream from the analysis point and it is part of the last 32.0 degrees of the bending magnet.

Table 1 Two LASSY Spectrometer Magnet Configurations

Parameter	LASSY-1	LASSY-2
Beam Rigidity (T m)	2.5	2.5
Dipole Induction (T)	5.0	5.0
Beam Bend Radius (m)	0.500	0.500
Distance from Target (m)	0.200	0.300
First Quadrupole Bend Angle (deg)	68.2	59.0
First Quadrupole Length (m)	0.595	0.515
Center Dipole Bend Angle (deg)	60.0	56.4
Center Dipole Length (m)	0.524	0.492
Second Quadrupole Bend Angle (deg)	39.2	32.0
Second Quadrupole Length (m)	0.347	0.280
Distance to Analysis Point (m)	0.600	0.800
Total Magnet Bend Angle (deg)	168.0	147.4
Total Beam Length (m)	2.266	2.387

Three LASSY spectrometer magnet designs are presented in this report. The first type is a pair of air core axial symmetric quadrupoles that are nested within a single 147.4 degree air core axial symmetric dipole. The second design is a variation of the first design in that the field is shaped using air core coils, but the magnetic flux is returned through a C shaped return yoke with the open part of the C pointing toward the center of the solenoid. The third type is a pair of axial symmetric air core quadrupoles that are in the gap of a single 147.4 degree Vobly type dipole with an iron return yoke.

THE AIR CORE SOLENOIDAL DIPOLE AND QUADRUPOLES

A 360 degree LASSY spectrometer dipole can be represented as a pair of air core solenoids that form a dipole field between the coils when they are at opposite polarity. The solenoids can consist of several coils as long as the sum of the currents for all of the solenoid coils is zero. If the coils are properly distributed, the quality of the field in the dipole can be very good. The field inside the inner coils on the axis will be relatively low and the field outside of the outer coils will also be relatively low. The direction of the flux inside of the inner coils and outside the outer coils will be opposite that of the field inside of the dipole. A 360 degree solenoidal quadrupole can be formed in the same way that a 360 degree solenoidal dipole is formed. As with the dipole, the sum of all of the currents in the solenoidal quadrupole is zero. A partial solenoidal dipole (with bend angles of less than 360 degrees) can be formed by running the current from the positive polarity coils to the negative polarity coils along a radial line that passes through the axis of the solenoid. Solenoidal quadrupoles can be terminated in the some way. Since the LASSY spectrometer magnet consists of a pure curved dipole and two combined function defocusing curved dipoles on either side of the pure curved dipole, the desired magnetic field can be formed by nesting the solenoidal quadrupoles within the large bend angle solenoidal dipole. Figure 1 shows a solenoidal dipole coil configuration that produces a good quality dipole field perpendicular to the symmetry plane between a radius of 350 mm and 650 mm. Figure 2 shows a solenoidal defocusing quadrupole that produces a good quality curved quadrupole field on the symmetry plane between a radius of 350 and 650 mm. The solenoidal quadrupole coils shown in Figure 2 will nest inside of the solenoidal dipole coils shown in Figure 1. Figure 3 shows a cross-section through the solenoidal dipole section and the combined function solenoidal dipole sections. Figure 4a shows a plane view of the dipole and Figure 4b shows a plan view of the quadrupoles within the dipole. Figure 4c is a plan view cross-section of the spectrometer magnet through the plane of symmetry. A concept for the LASSY gas filled chamber is also shown in Figure 4c.

Figure 1
Air Core Solenoidal Dipole Dimensions

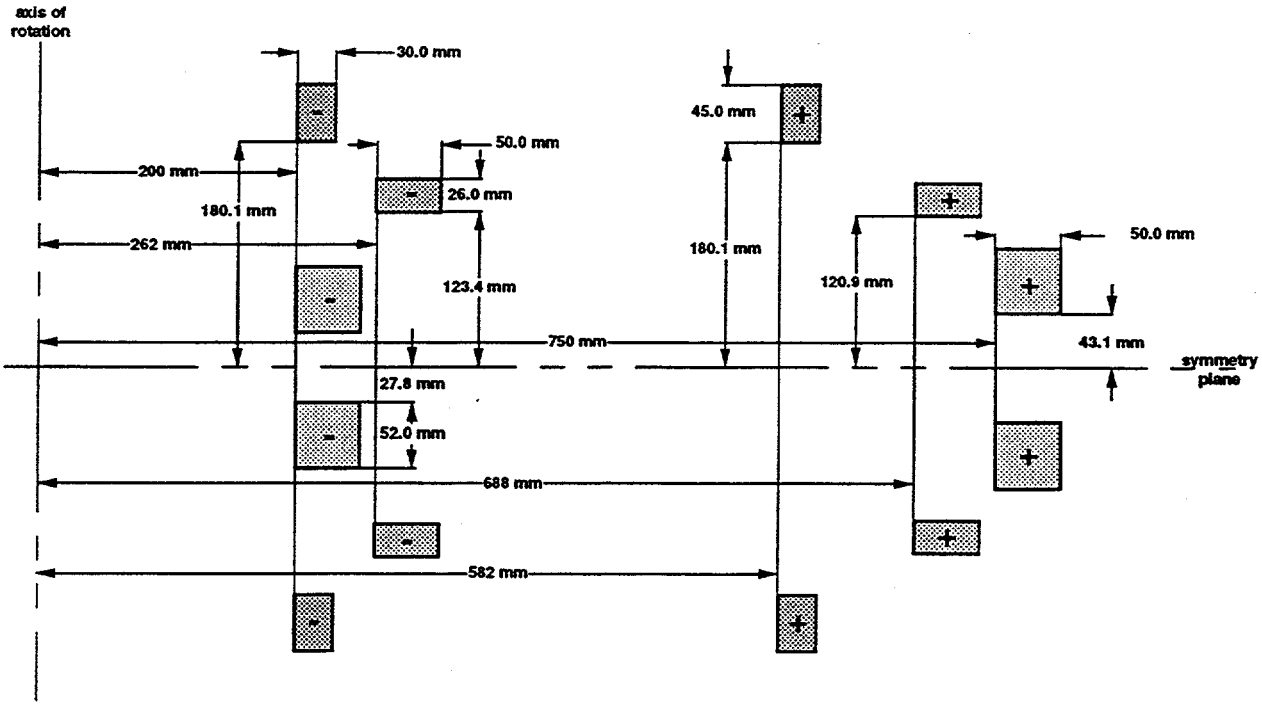

Figure 2
Air Core Solenoidal Quadrupole Dimensions

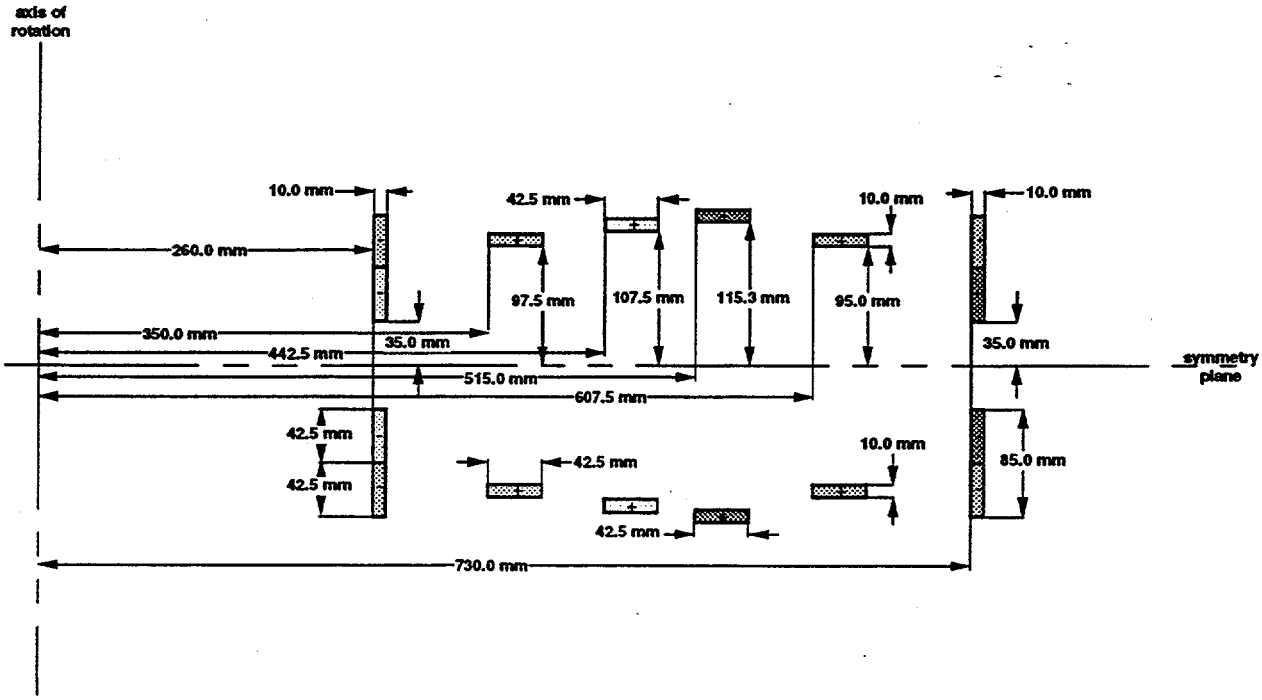

Figure 3a

LASSY Dipole Cross-section Section A-A

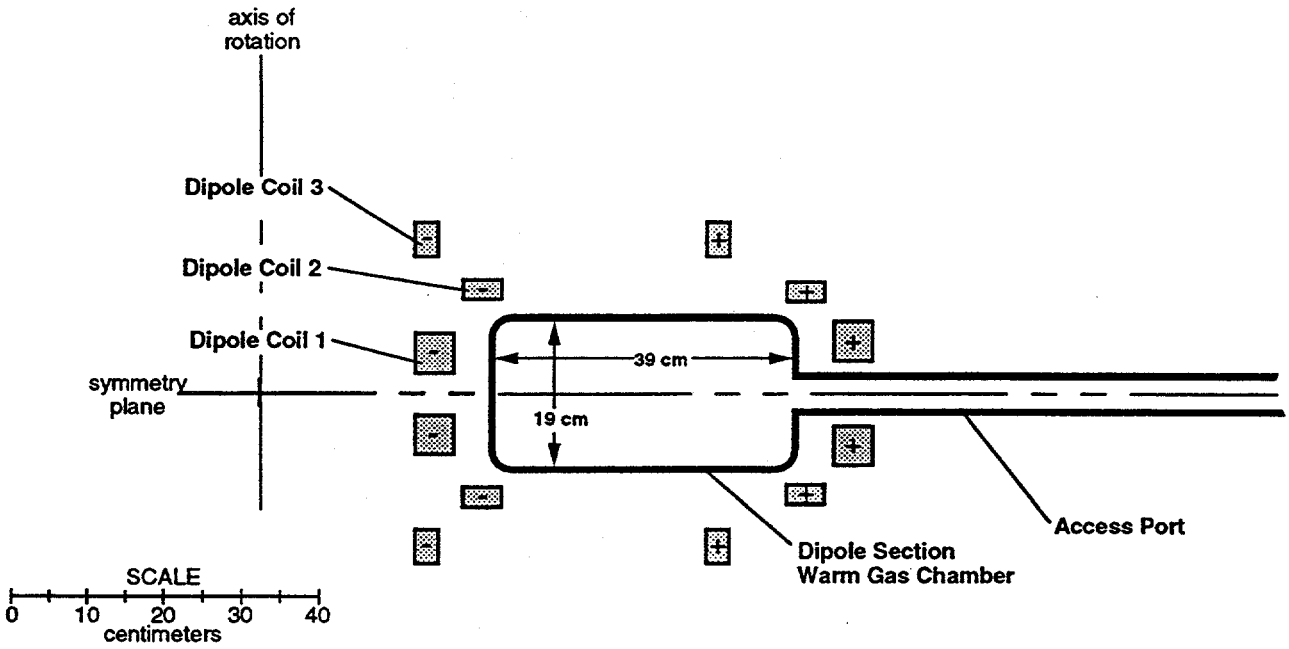

Figure 3b

LASSY Dipole Plus Quadrupole Cross-section Section B-B

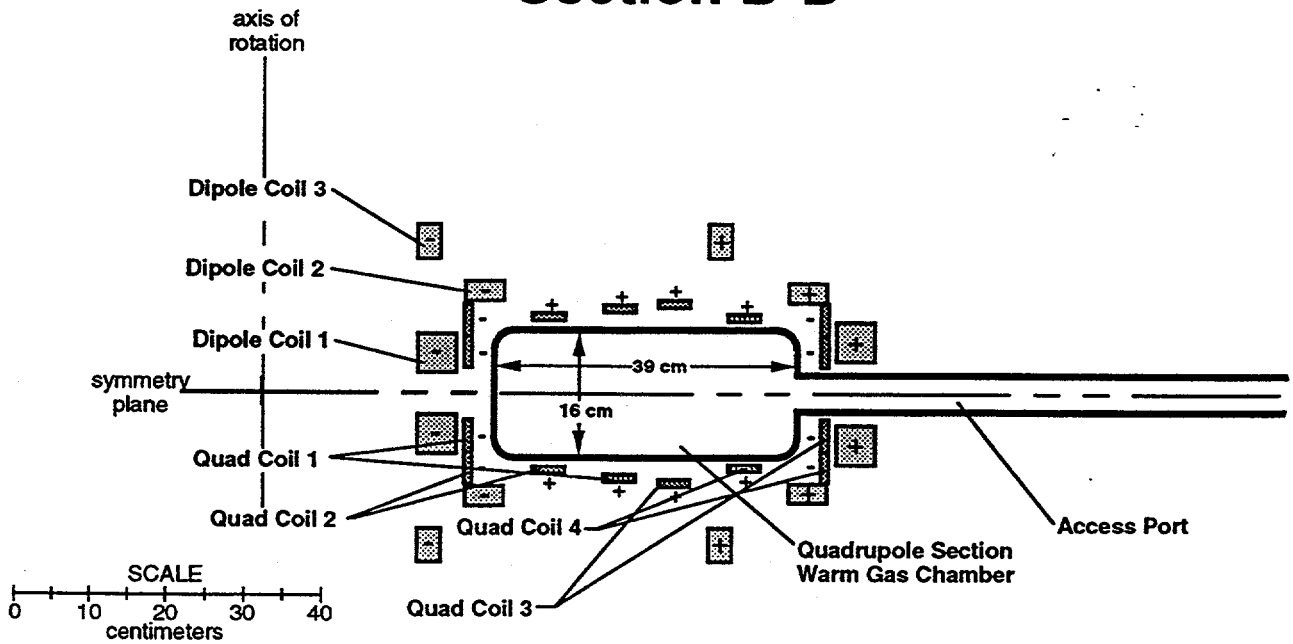

Fig. 4a

Plan View of the Dipole Coils from the Inside with the Quadrupole Coils and Beam Chamber Removed

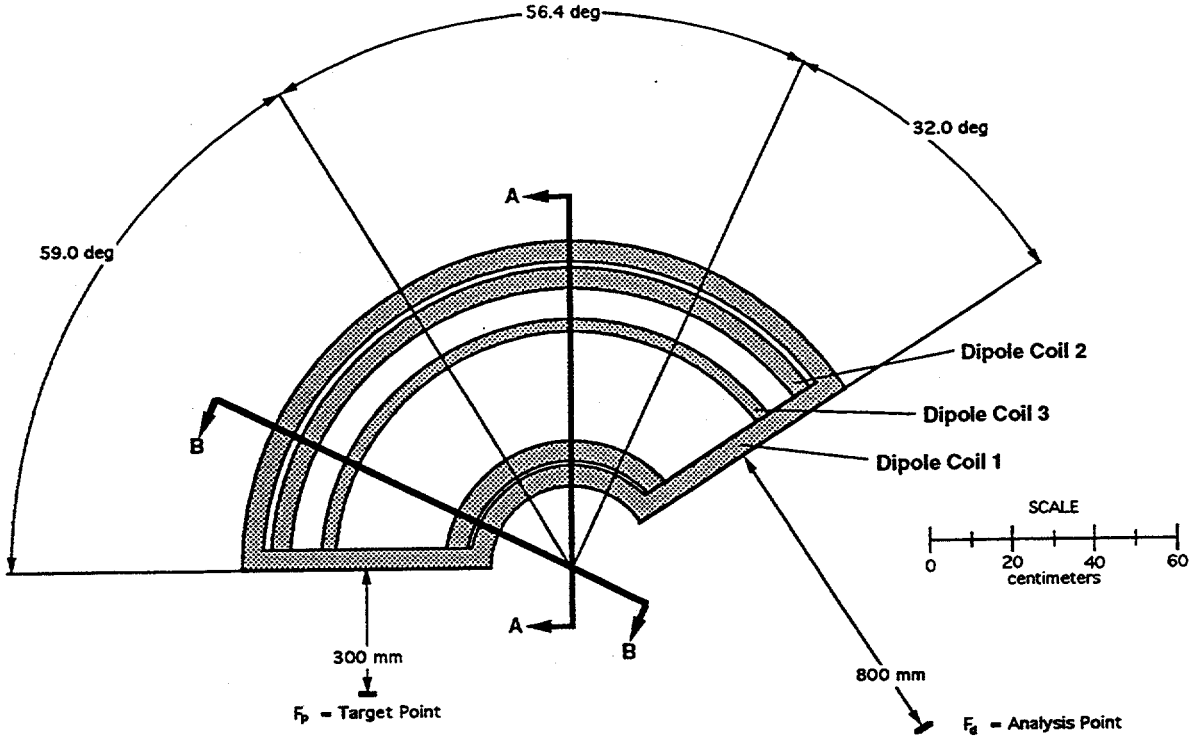

Fig. 4b

Plan View of the Dipole and Quadrupole Coils from the Inside with the Beam Chamber Removed

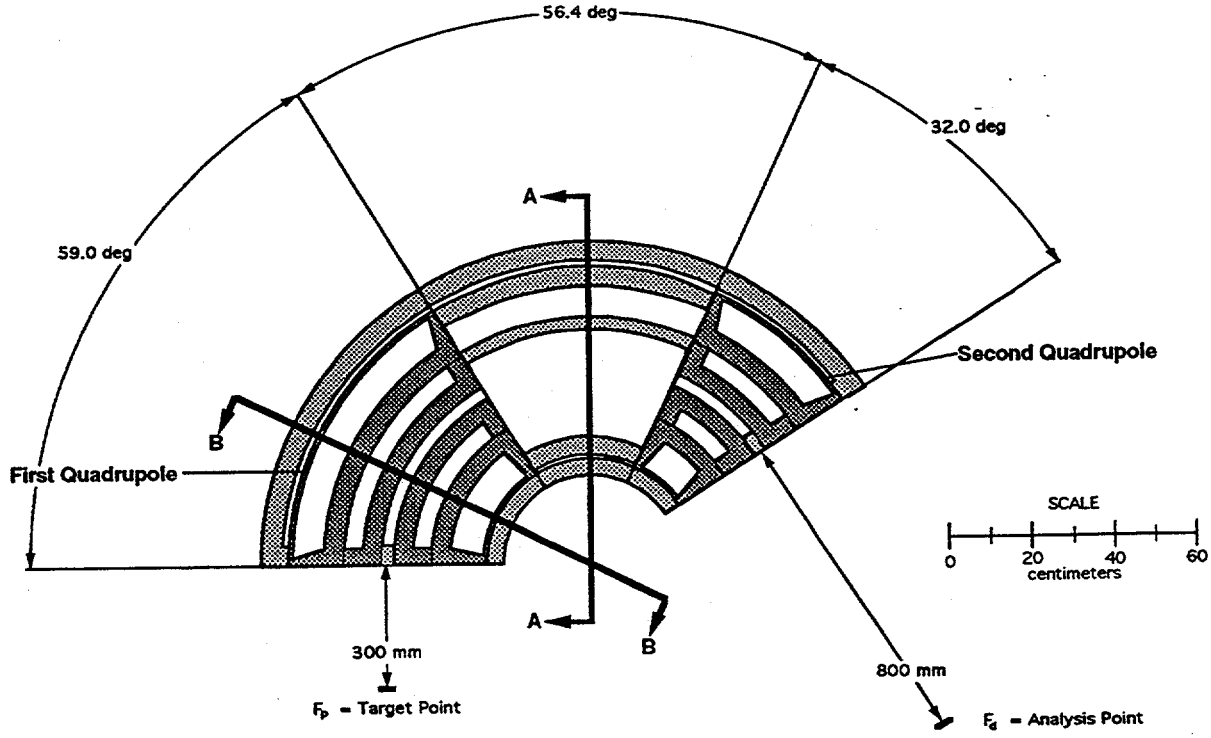

Fig. 4c
Plan View Cross-section through the Center of the Magnet and the Beam Chamber (Section C - C)

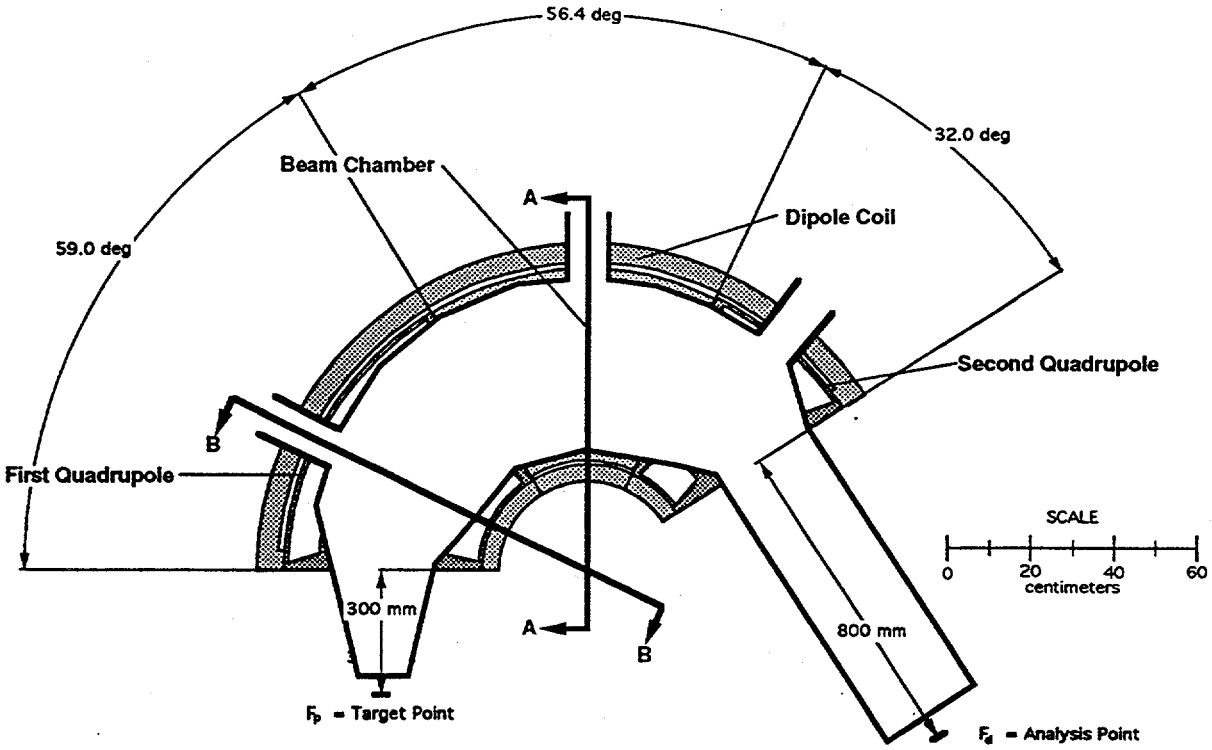

Figure 5 compares the field uniformity for two versions of the air core solenoidal dipole. The six coil version talked about in Figure 5 is the solenoidal dipole that is shown in Figure 1 and Figure 3. In the region from R = 35 cm to R = 65 cm, the field in the six coil dipole is good to about 3 parts in 1000, whereas the four coil dipole field has up to a 3 percent error over the same range of radius. Clearly the six coil dipole is acceptable for the LASSY spectrometer, but the four coil dipole may not be. Figure 6 shows the field on the plane of symmetry within the six coil dipole and the combined function quadrupole. The field quality shown in Figure 6 is more than acceptable for the LASSY spectrometer. In both Figures 5 and 6, the field at a radius of 50 centimeters is 4.0 T. One can increase the field to 5 T by increasing the current density in all of the coils by twenty-five percent. To achieve 5 T, the current density in the dipole windings must be 45.94 amperes per square millimeter; the quadrupole winding current density must be 41.48 amperes per square millimeter. Both magnet current densities are too high side given the physical size of the magnet. If one were to pursue the air core solenoidal coil design at 5 tesla, one must reduce the current density in the windings.

The advantages of the air core solenoidal version of the LASSY spectrometer magnet are as follows: 1) The size of the magnet is relatively small. The cold mass of this option is probably the lowest of all of the designs studied. 2) The dipole coils are relatively easy to wind because they can be wound in a single plane. 3) The LASSY spectrometer beam chamber is accessible from the outside as well as from the ends. 4) The magnet can be operated over a range of fields. This version of the LASSY spectrometer magnet has a number of disadvantages: 1) The peak induction in the conductor is high (7.8 T in the dipole in the combined function section when the central induction is 4 T). For this reason alone, 5 T operation is not possible without reducing the current density by a factor of two. 2) The quadrupole windings are quite complex with a complex end structure. 3) Containing the magnetic forces will be difficult for both the dipole and the quadrupole windings. 4) The stray field from the air core solenoidal coils will be quite high.

Figure 5 Comparison of the Field Uniformity in Four Coil and Six Coil Dipoles

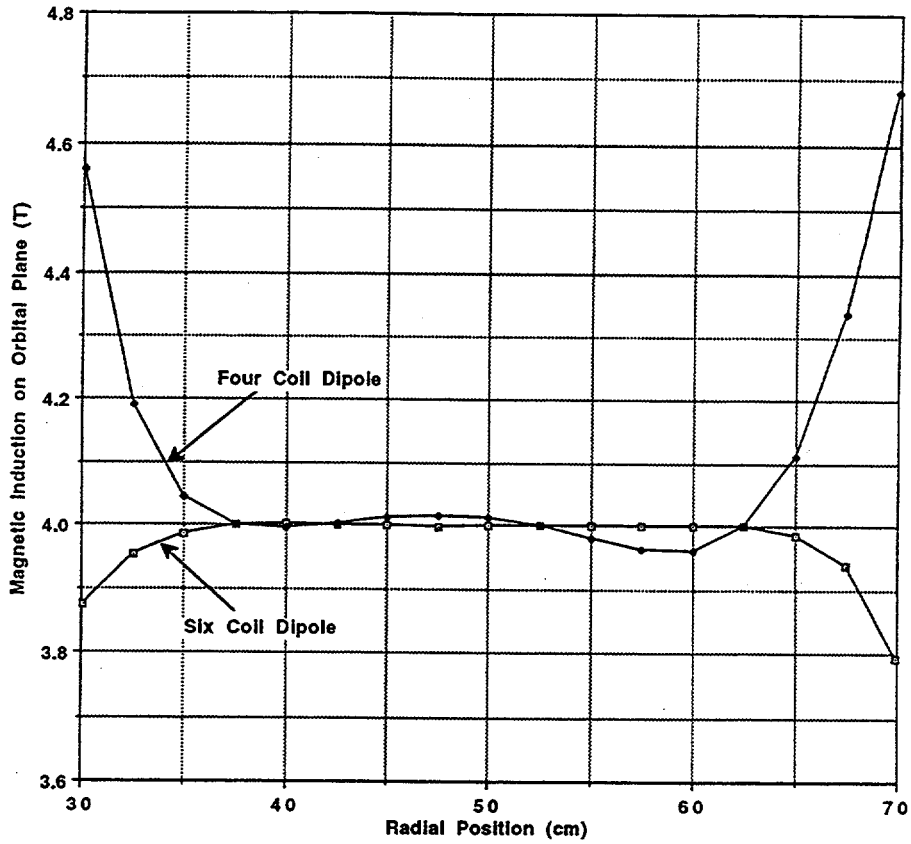

Figure 6 Magnetic Induction versus Radial Position on the Beam Orbit Plane

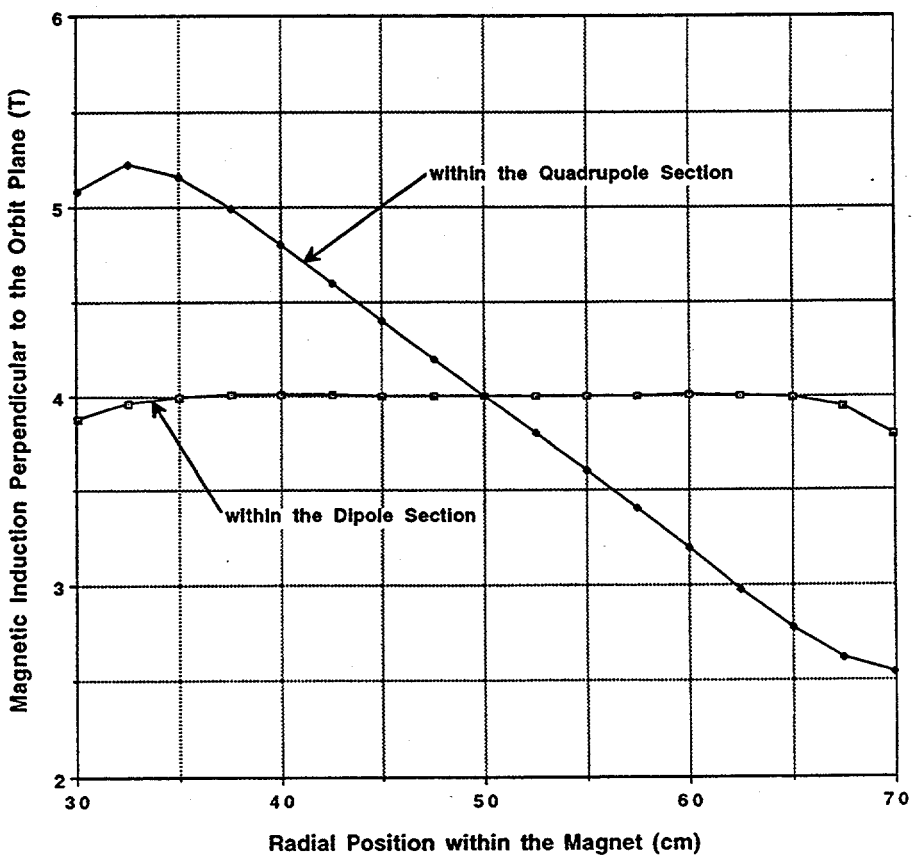

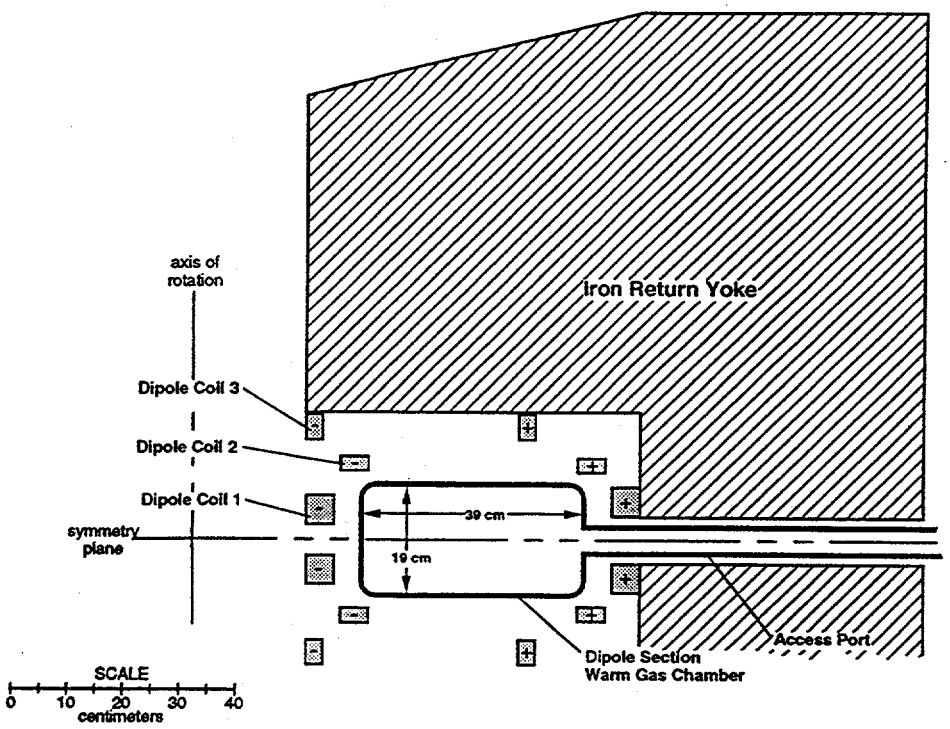

Figure 7

LASSY Dipole with Iron Cross-section Section A-A

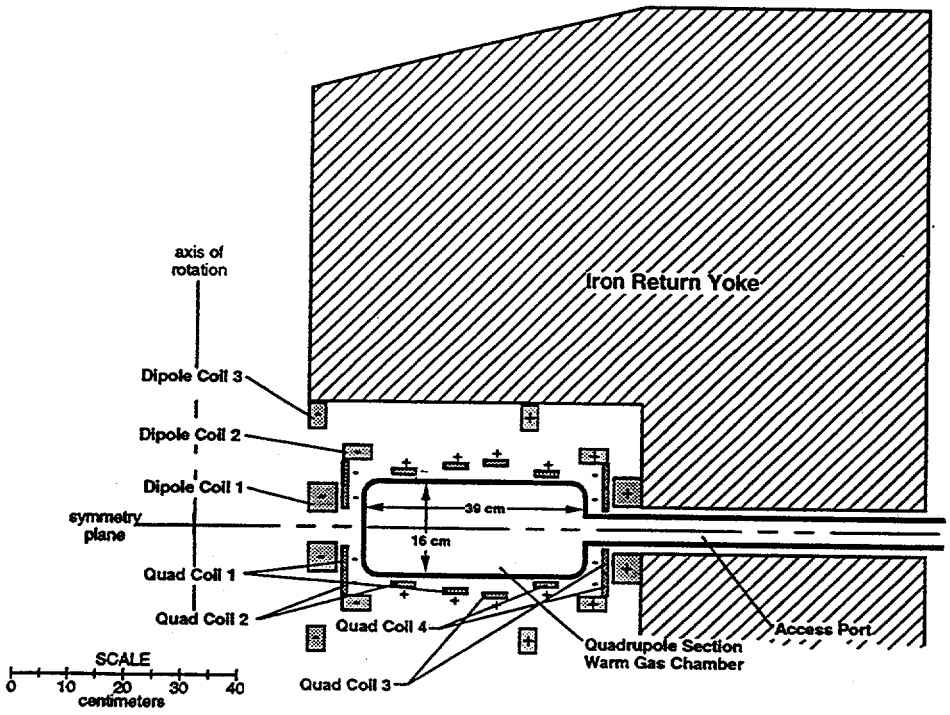

Figure 8

LASSY Dipole Plus Quadrupole Cross-section with Iron Section B-B

THE AIR CORE SOLENOIDAL DIPOLE AND QUADRUPOLES WITH AN IRON RETURN YOKE

The air core solenoidal dipole and quadrupoles can be combined with an iron return yoke to reduce the stray magnetic flux from the LASSY magnet. Figures 7 and 8 show tne concept of a C-shaped iron core around the air core coils. The location of the current blocks changes when the iron is added to return the magnetic flux; this change is not reflected in Figures 7 and 8. Even with an iron return yoke, the LASSY superconducting magnet is a conductor dominated solenoidal magnet, so the coil position change would be expected to be reasonable and the field quality is expected to be comparable with the air core solenoidal dipole and quadrupole solutions. It is likely that the iron return yoke would be cold and it would act as part of the magnetic force constraining structure. The mass of a minimum sized iron return yoke is expected to be about 20 metric tons. (The iron configuration shown in Figures 7 and 8 has a mass of about 30 metric tons.)

The primary advantage of adding the iron to the air core solenoidal solutions is to reduce the stray magnetic flux from the magnet. In addition the iron can play a role is supporting the magnetic forces provided the iron is cold. The coils are similar to the coils in the previous case except the current needed to achieve a 5 tesla central induction is reduced about 20 percent. The peak induction in the windings is reduced relative to the central induction when the iron return yoke is added. (As with the air core case, the peak field in the coil is still too high.) The beam region is still accessible from the outside provided there are holes in the return iron to permit access in two or three selected locations. As before, there is access to the beam chamber from the ends. The disadvantages with the approach shown in Figures 7 and 8 are as follows: 1) Both the dipole and the quadrupole windings are complex. 2) While the stray field is reduced, the stray field at the ends of the magnet may still be a problem. The stray field is probably reduced enough to permit the use of a superconducting shield to shield the target region from excess magnetic flux. 3) The physical size of the iron shielded magnet is larger (probably the largest of the three cases studied here) and the iron mass is a factor in both cost and the cryogenic heat leak into the system. 4) It is unlikely that either the dipole or the quadrupole magnets are tunable over a range of central inductions.

THE AIR CORE SOLENOIDAL QUADRUPOLES WITHIN A VOBLY TYPE SOLENOIDAL DIPOLE WITH AN UNSATURATED IRON RETURN YOKE

Straight picture frame magnets have a very good field uniformity over the entire width of the magnet pole until the iron in the pole and or the return yoke saturates. It can be shown by the method of images that a curved (axial symmetric) picture frame dipole will behave in the same way as a straight picture frame dipole provided the iron does not saturate. A modified picture frame dipole proposed by Pavel Vobly at INP Novosibirsk[2,3] will behave like a picture frame dipole even when there is saturated iron. The Vobly dipole has saturated iron in the poles, but shield coils keep the magnetic flux in the pole until it can be returned by an unsaturated iron return yoke. As a result; the end field fall off is similar to that of conventional iron dominated dipoles and the field is uniform over the whole pole width. The straight Vobly dipole concept has been proposed for short high field light source dipoles[4]. It appears that the Vobly dipole concept can be extended to curved dipoles, such as the LASSY spectrometer dipole, as well[3,5].

Figure 9 shows a cross-section of a Vobly type axial symmetric dipole that is roughly the same size as the dipole with an iron return yoke shown in Figure 7. Figure 10 shows solenoidal quadrupole windings inside of the Vobly type of axial symmetric dipole. The combined function magnet shown in Figure 10 is similar in size to the combined function magnet shown in Figure 8. Figures 11a, 11b, 11c, 11d and 11e show plan view cross-sections for a LASSY spectrometer magnet that is based on the Vobly dipole concept that has saturated iron in the pole region.

Figure 9

LASSY Vobly Dipole Cross-section Section A-A

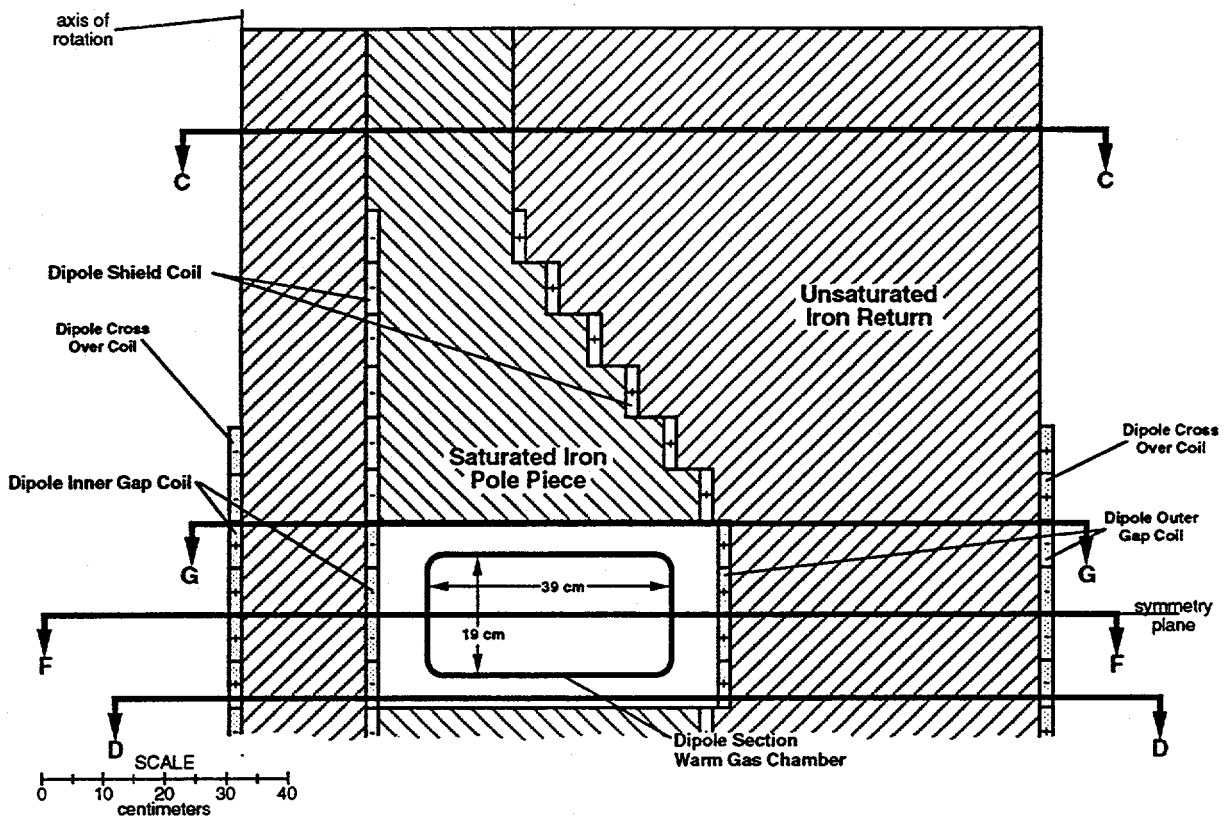

Figure 10

LASSY Vobly Dipole Plus Quadrupole Cross-section Section B-B

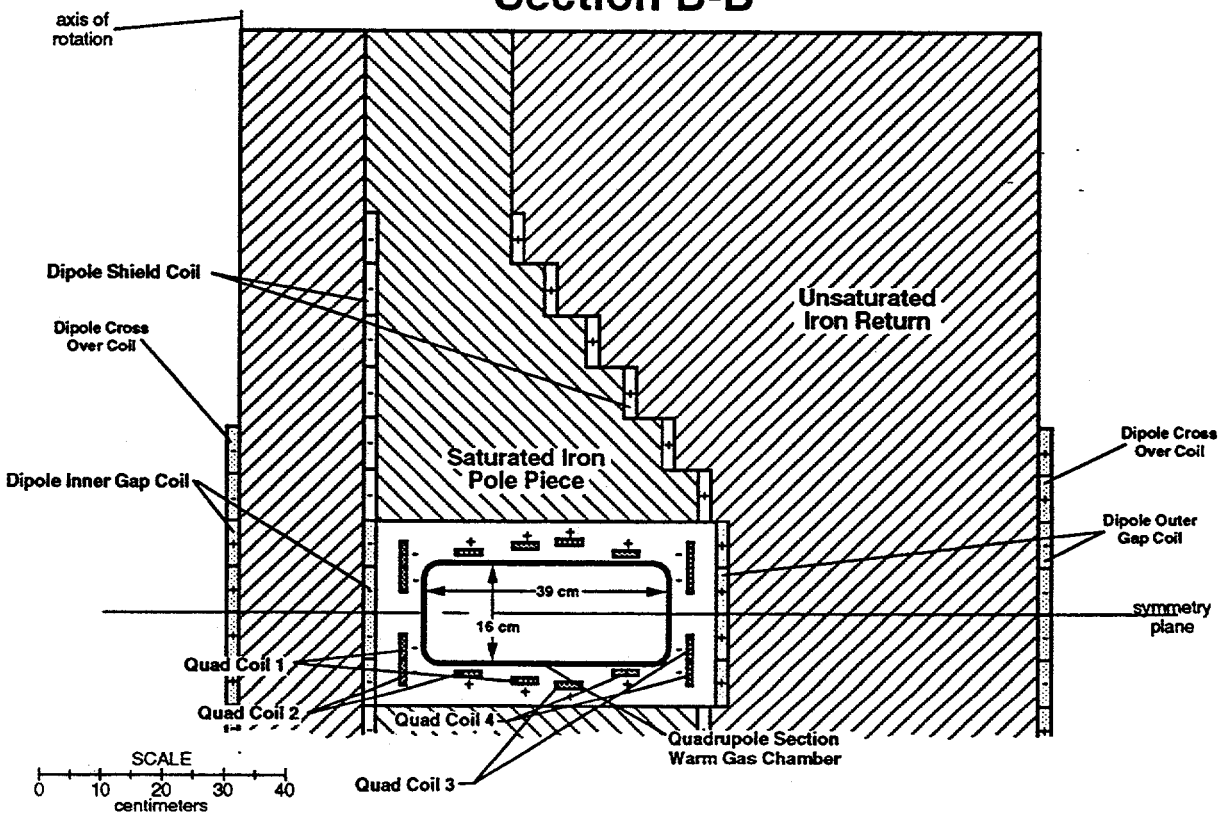

Fig. 11a

Plan View Cross-section through the Upper Magnet Iron (Section C - C)

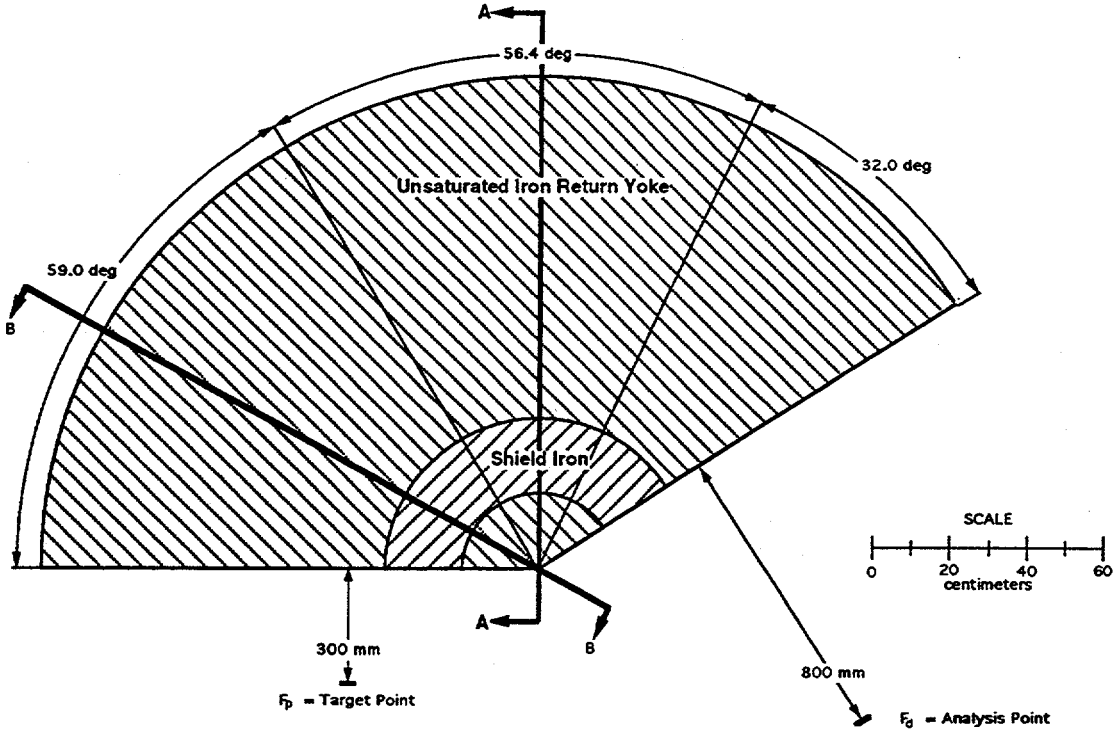

Fig. 11b

Plan View Cross-section with the Quadrupole Windings, Superconducting Shields, and Beam Gas Vessel Removed (Section D - D)

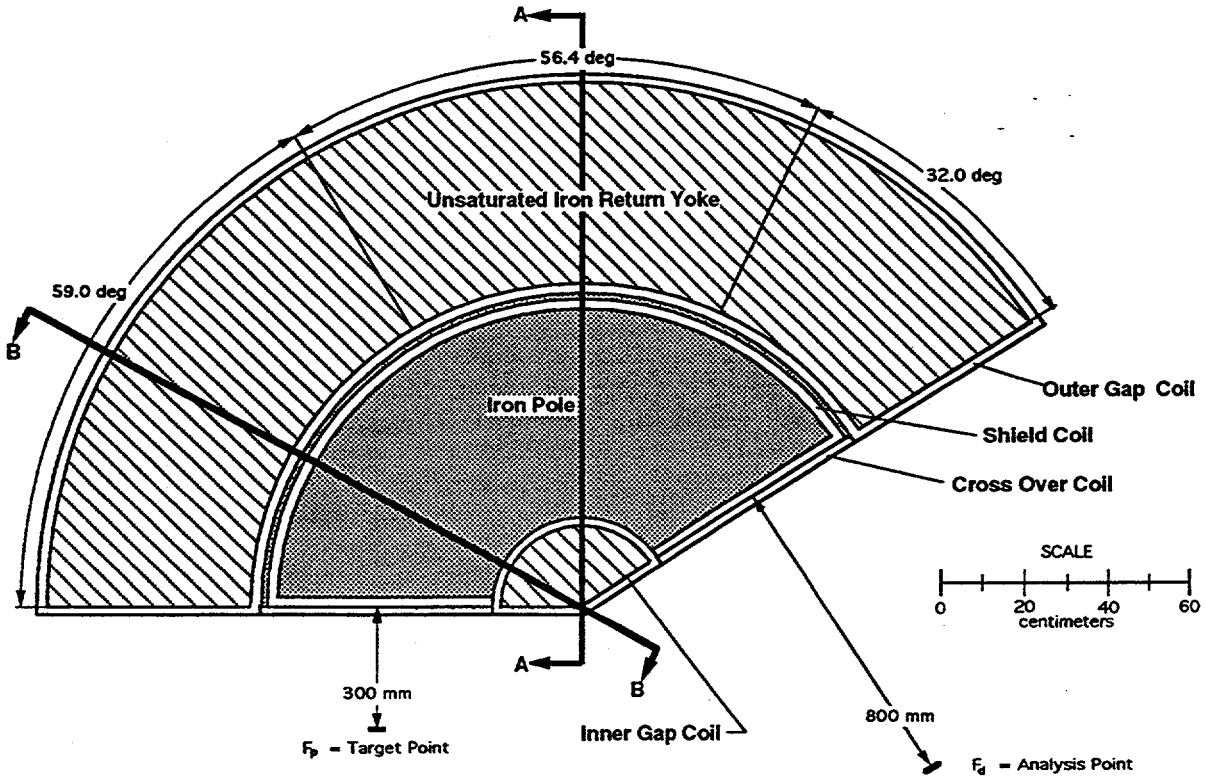

Fig. 11c
Plan View Cross-section with the Superconducting Shields and Beam Gas Vessel Removed (Section E - E)

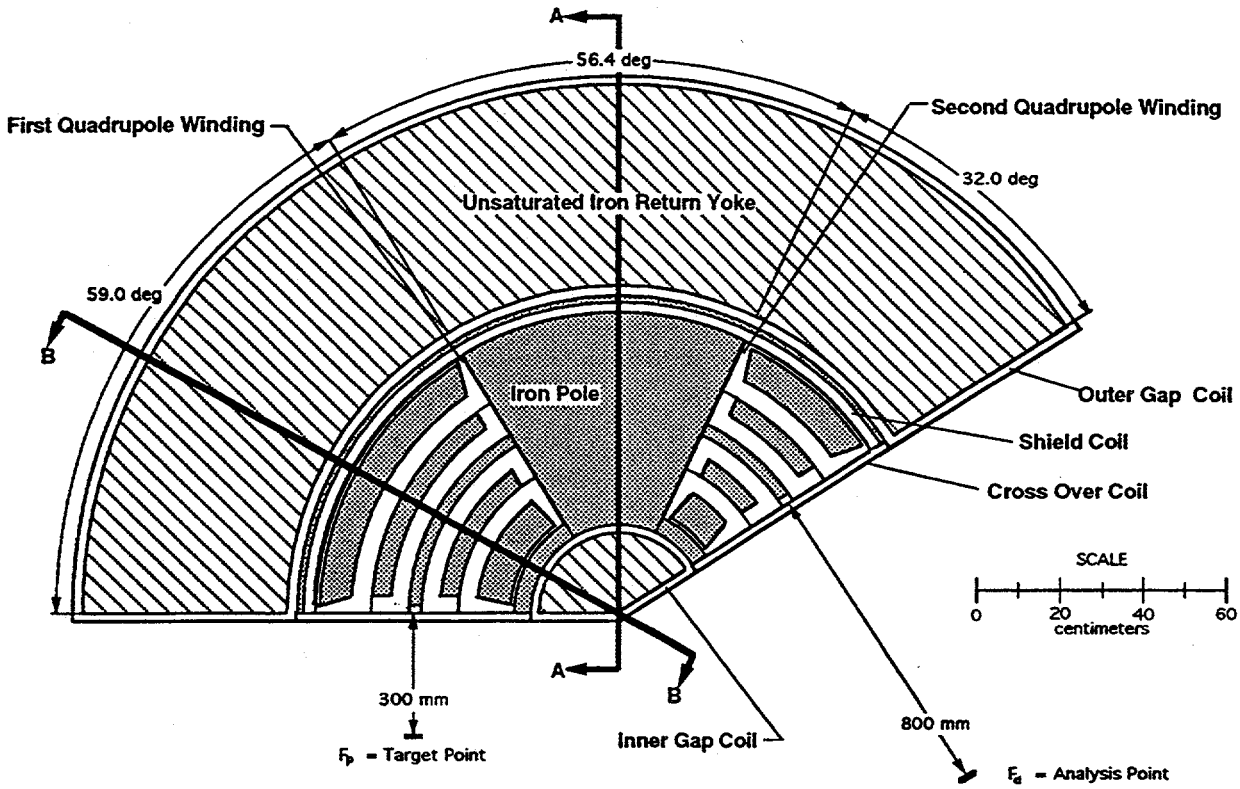

Fig. 11d
Plan View Cross-section through the Center of the Magnet (Section F - F)

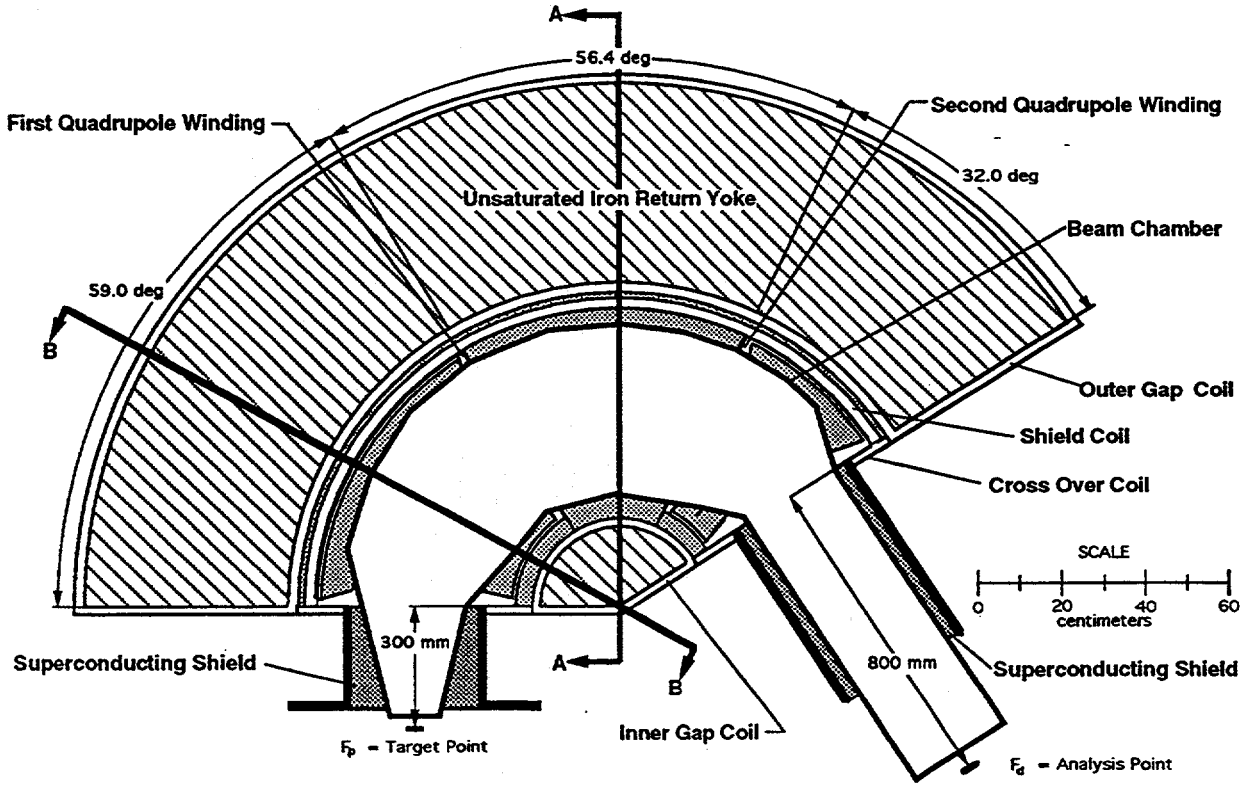

Fig. 11e

Plan View Cross-section above the Quadrupole Magnets (Section G - G)

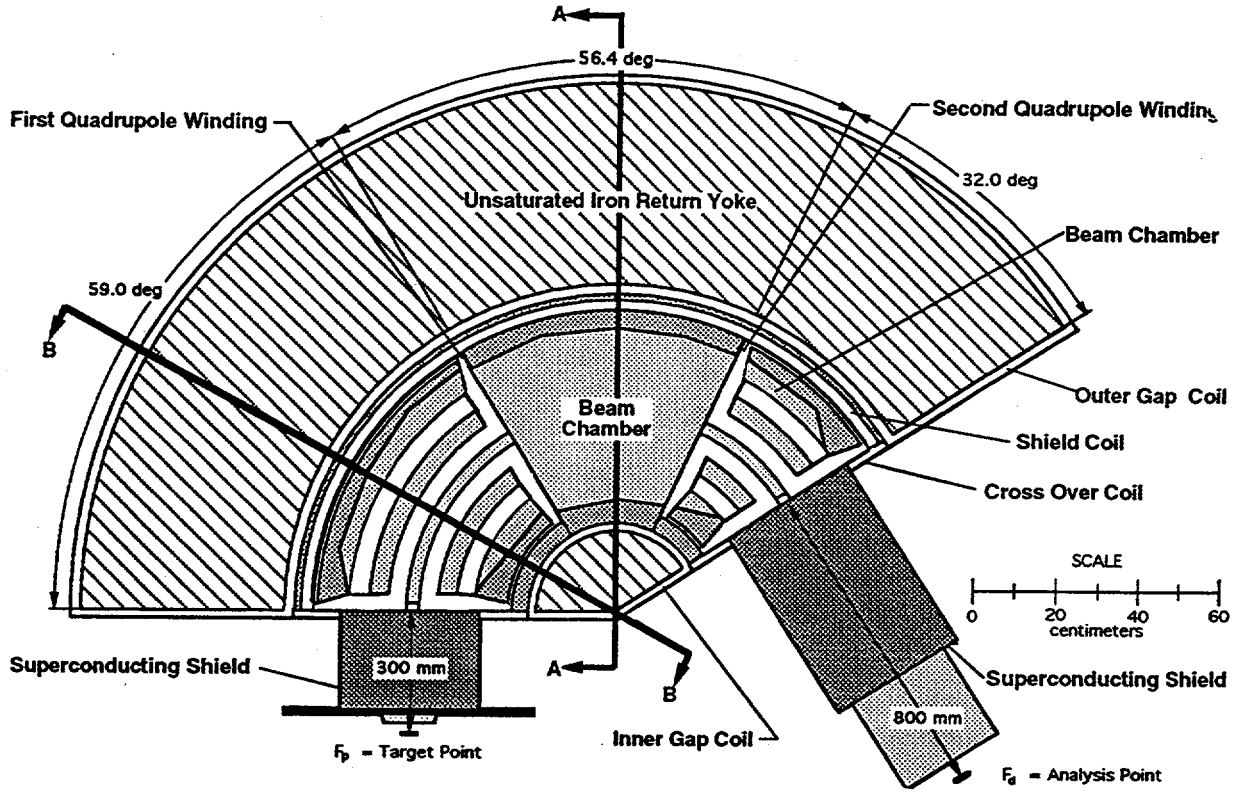

The Vobly dipole shown in Figures 9 and 10 consists of three types of coils, gap coils, crossover coils and shield coils. The shield coils keep the magnetic flux in the saturated iron pole until the flux can be returned by unsaturated iron radially on the inside and the outside of the pole. The quality of the field in the dipole gap is a function of the height the slope, and the current in the shield coil[6]. The shield coil will be separately powered from the gap and crossover coils. At low fields, when the pole region is unsaturated, the current in the shield coil will be nearly zero and the field across the pole will be uniform. As the pole becomes saturated, the shield coil must be powered to direct the magnetic flux and keep the field across the pole uniform. A properly designed Vobly dipole will generate a uniform magnetic field (better than 1 part in 1000) over 85 or 90 percent of the pole width provided the current in the shield coil is properly set with respect to the gap and crossover coils.

The axial-symmetric Vobly dipole has a number of advantages over other types of dipole windings that could be used in the LASSY spectrometer magnet. They are as follows: 1) The current density in the winding is over a factor of two lower than the air core solenoidal dipole case. For the 5 tesla magnet shown in Figure 9, the current density in the winding is 19.89 amperes per square millimeter. 2) The peak magnetic induction in the winding is about the same as the magnet central induction in a Vobly type dipole. Therefore, the highest peak induction will be in the quadrupole coils. 3) The dipole coils are reasonably easy to wind. There are no out of plane bends in any of the dipole coils. 4) Because of the shield coil, the stray field at the end of the magnet is like the end of a conventional dipole magnet. The stray field at the target can probably be eliminated entirely by the use of a superconducting shield. 5) The dipole field across the mid plane is very good (at least 10 times better than is needed). 6) A Vobly dipole is tunable over a wide range of central inductions. (The quadrupole as shown is not tunable.) The disadvantages of the Vobly type of spectrometer magnet are: 1) The overall size of the Vobly dipole is larger than the air

core solenoidal coil case, but physical size of the Vobly type of dipole is not larger than the air core solenoidal dipole plus return iron case. 2) The iron in the dipole must be cold. This increases the heat leak into the magnet cryostat. 3) Because of the dipole has coils on the symmetry plane, there is no access to the beam from the side. Access from the ends only is probably adequate

Because the Vobly type of dipole has an inherently low stray field (particularly at the magnet ends), the magnetic field at the target and the analysis point can be kept very low through the use of a superconducting shield (See Figures 11d and 11e). The shield can be fabricated using a Kobe steel product that consists of alternating layer of niobium titanium, niobium, and copper. The material can be fabricated as ductile sheets up to one millimeter thick (About 40 layers of superconductor are in the sheet.) Several layers proposed shield material can be used to shield out as much as 2 tesla of external field. There appear to be a number of shielding alternatives in the region of the target and the analysis point when a Vobly type of dipole is used.

WHERE DOES ONE GO FROM HERE?

It is clear that the Vobly dipole concept is attractive for the LASSY spectrometer magnet. It is useful to note that the pole width of the Vobly dipole is set by the quadrupole coils that are inside of the dipole. If the full potential of the Vobly dipole is to be fulfilled, the quadrupole coils must be greatly simplified so that the dipole pole width can be about fifteen percent larger than the maximum width of the vacuum chamber. If the maximum width for the beam chamber is 30 cm, the magnet pole width can be about 35 cm. As a result, the minimum mass for the 5 tesla LASSY dipole will be about 11.5 metric tons (for a 150 degree bend) versus 22 metric tons for the minimum mass case for the 55 cm wide pole and 32 metric tons for the 55 cm wide pole magnet shown in Figure 9. The gap of the magnet can be opened up if necessary without greatly increasing the magnet mass or cost. The mass of the dipole and hence its cost is predominately a function of the width of the magnet pole.

One proposal for simplifying the quadrupole is to put the equivalent of a current sheet on the iron poles of the dipole. The current in the upper and lower poles must be the same and it must have the same polarity. The current from the these sheets can be returned at the top and the bottom of the dipole. The end termination for the combined function dipole can be quite sharp if this method of generating the combined function field is used. The current sheet approach can greatly simplify the combined function elements. A cross-section of this combined function dipole with a 35 centimeter wide pole is shown in Figure 12. If the quadrupole coils are separately powered, the combined function magnet should be tunable over a range of fields.

The shield coils can be separate for each of the two combined function magnets and the pure dipole magnet. This permits one to put a small positive or negative sextupole in the field in each of the three regions. The addition of a small amount of sextupole may improve the tracking within the spectrometer. At this time it appears that the gap coils and crossover coils can still be common for the three magnet sections.

In order to go forward with the LASSY spectrometer magnet, so that a formal proposal can be generated, the following must be done: 1) The parameters for the beam chamber should be set so that a preliminary magnet gap and pole width can be set. 2) Axial-symmetric two dimensional field calculations should be made using POISSON or OPERA-2D for both the pure dipole and the combined function dipoles. This permits one to design the shield coil system and determine the current that should be used to power both the gap and crossover coils and the shield coils. Using the two dimensional field calculations, one can determine the best way of minimizing the mass of the spectrometer magnet system. 3) Estimate the cost of the magnet. 4) Calculate the three dimensional field in the spectrometer magnet so that accurate beam tracking can be done. The three dimensional calculations will also determine the peak field points in the coils.

Figure 12

Optimized LASSY Vobly Dipole Cross-section with the Quadrupole Windings

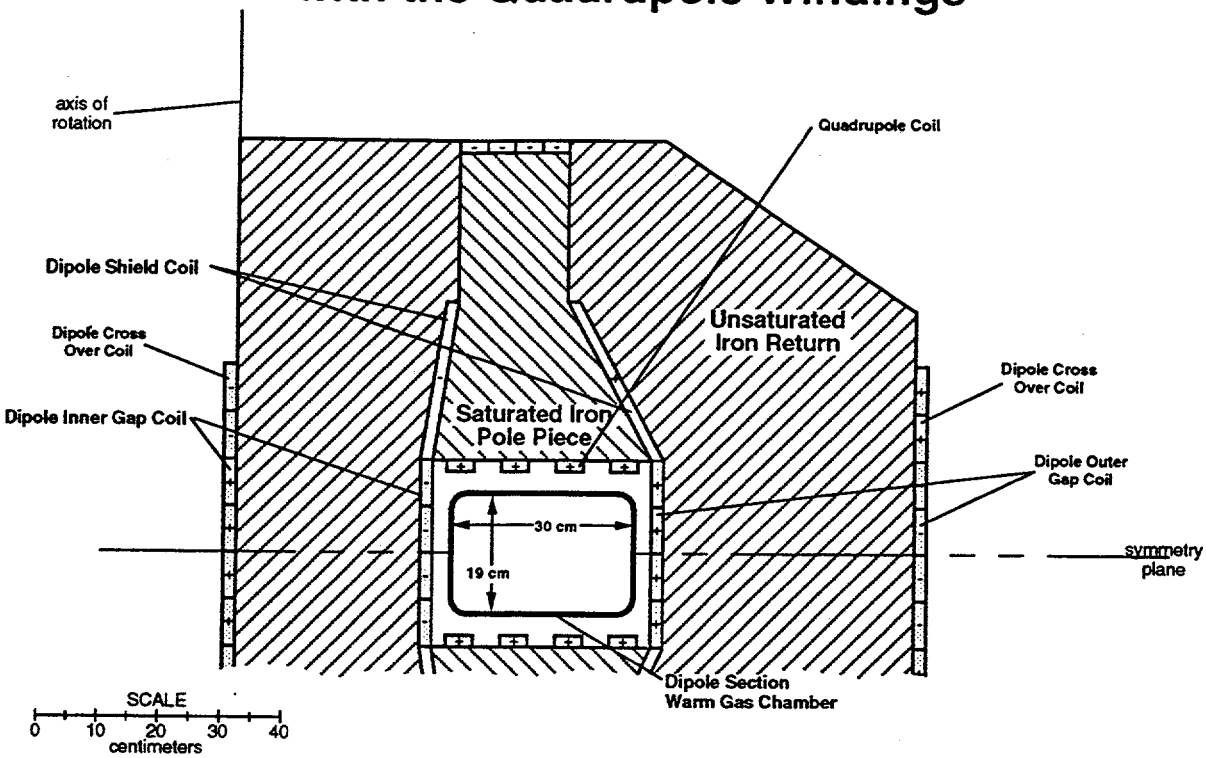

ACKNOWLEDGMENTS

This work was performed with the support of the Director of the Office of Energy Research, Office of High Energy and Nuclear Physics, Nuclear Physics Division, United States Department of Energy under contract number DE-AC03-76SF00098.

REFERENCES

1. A. Ghiorso and K. E. Gregorich of the Lawrence Berkeley Laboratory, private communication concerning the requirements for the LASSY spectrometer magnet

2. G. N. Kulipanov, N. A. Mezentsev, L. G. Morgonov, et al, "Development of a Superconducting Compact Storage Rings for Technical Purposes in the USSR," Rev Sci. Instrum. 63 (1), p 731 (1992)

3. P. D. Vobly, private communication concerning compact synchrotron dipole magnet designs

4. M. A. Green, A. A. Garren, E. M. Leung et al, "A Superconducting Bending Magnet System for a Compact Synchrotron Light Source," to be published in Advances in Cryogenic Engineering **41**, Plenum Press, New York (1995), LBL-37503

5. M. A. Green, "Foreign Travel Report June 1992," concerning travel to Russia and the Ukraine Republic, Lawrence Berkeley Laboratory Report LBID-1891, July 1992

6. M. A. Green, "Superconducting Dipole Magnets for Compact Light Source Storage Rings," Lawrence Berkeley Laboratory Internal Report LBID-2005, 9 Feb. 1994