ANL/ASD/CP-97728

THE OPERATION OF THE BNL/ATF GUN-IV PHOTOCATHODE RF GUN AT THE ADVANCED PHOTON SOURCE*

S.G. Biedron#, G.A. Goeppner, J.W. Lewellen, S.V. Milton, A. Nassiri, G. Travish, X.J. Wang†, N.D. Arnold, W.J. Berg, M. Babzien†, C.L. Doose, R.J. Dortwegt, A. Grelick, J.N. Galayda, G.M. Markovich, S.J. Pasky, J.G. Power††, B.X. Yang

Advanced Photon Source, Argonne National Laboratory, Argonne, Illinois USA

†Accelerator Test Facility, Brookhaven National Laboratory, Upton, New York USA

††Argonne Wakefield Accelerator, Argonne National Laboratory, Argonne, Illinois USA

RECEIVED SEP 28 1999 OSTI

Abstract

At the Advanced Photon Source (APS) at Argonne National Laboratory (ANL), a free-electron laser (FEL) based on the self-amplified spontaneous emission (SASE) process is nearing completion. Recently, an rf photoinjector gun system was made available to the APS by Brookhaven National Laboratory/Accelerator Test Facility (BNL/ATF). It will be used to provide the high-brightness, low-emittance, and low-energy spread electron beam required by the SASE FEL theory. A Nd:Glass laser system, capable of producing a maximum of 500 μJ of UV in a 1-10 ps pulse at up to a 10-Hz repetition rate, serves as the photoinjector's drive laser. Here, the design, commissioning, and integration of this gun with the APS will be discussed.

1 INTRODUCTION

The Advanced Photon Source (APS) at Argonne National Laboratory (ANL) is currently commissioning a free-electron laser (FEL) based on the self-amplified spontaneous emission (SASE) process [1]. This project, referred to as the APS SASE FEL, is designed to achieve saturation in the visible, UV, and ultimately VUV wavelengths. To assist in producing the beam required for saturation in the shortest possible distance, the APS has installed an on-loan copy of the Brookhaven National Laboratory/Accelerator Test Facility (BNL/ATF) high-brightness photoinjector, GUN-IV, at the head of its linac. This paper will discuss the gun design, drive-laser, integration with the APS systems, commissioning, and future plans.

2 DESIGN AND CAPABILITIES

The BNL-ATF 1.6-cell 2856-MHz photocathode rf gun and emittance compensation solenoid magnet is capable of producing a beam that fits design constraints of the APS SASE FEL. The fully symmetrized, π-mode device can achieve gradients of up to ~140 MV/m, capable of accelerating electrons up to 6 MeV. The solenoidal field is used to control transverse emittance dilution. The photoinjector is capable of running at repetition rates of up to 50 Hz.

3 THE APS DRIVE LASER

The drive-laser system consists of a mode-locked, diode-pumped Nd:Glass oscillator coupled to a Nd:Glass regenerative amplifier. The 119-MHz oscillator can produce 260 fs FWHM bandwidth-limited pulses centered at 1053 nm. The repetition rate of the oscillator is the 24th subharmonic of the accelerating field. The oscillator average output power is approximately 100 mW and is timing stabilized to < 1 ps rms. The regenerative amplifier is capable of producing 5 mJ in the IR and, after frequency quadrupling, ~500 μJ in the UV. During the amplification, some bandwidth is lost; therefore, the shortest pulse produced by the amplifier is roughly 1.5 ps FWHM. This is sufficiently short, based on the requirements of the photoinjector, and can be easily lengthened if so desired. The amplifier is capable of operating at up to 5 Hz, with a best effort repetition rate of 10 Hz. .

4 PHOTOINJECTOR SYSTEM

Figure 1 shows the layout of the photoinjector at the APS. A copper cathode is used, since the energy output of the drive laser is capable of producing sufficient quantum efficiency with this metal. In addition, copper will reduce the amount of time dedicated to laser cleaning and cathode replacement, and, since it is robust compared to other commonly used cathode materials, such as yttrium (Y) and magnesium (Mg), will also reduce the risk of cathode damage. The gun is driven by the UV laser beam at near normal incidence from an input mirror just after the solenoid magnet as opposed to the more difficult 70° incidence through two available laser ports. This input mirror is mounted on a rotatable *in vacuo*, micrometer, which provides the vertical positioning of the mirror as well as the horizontal positioning of the laser.

*Work supported by U.S. Department of Energy, Office of Basic Energy Sciences, under Contract No. W-31-109-ENG-38.

Email: biedron@aps.anl.gov

The submitted manuscript has been created by the University of Chicago as Operator of Argonne National Laboratory ("Argonne") under Contract No. W-31-109-ENG-38 with the U.S. Department of Energy. The U.S. Government retains for itself, and others acting on its behalf, a paid-up, nonexclusive, irrevocable worldwide license in said article to reproduce, prepare derivative works, distribute copies to the public, and perform publicly and display publicly, by or on behalf of the Government.

DISCLAIMER

This report was prepared as an account of work sponsored by an agency of the United States Government. Neither the United States Government nor any agency thereof, nor any of their employees, make any warranty, express or implied, or assumes any legal liability or responsibility for the accuracy, completeness, or usefulness of any information, apparatus, product, or process disclosed, or represents that its use would not infringe privately owned rights. Reference herein to any specific commercial product, process, or service by trade name, trademark, manufacturer, or otherwise does not necessarily constitute or imply its endorsement, recommendation, or favoring by the United States Government or any agency thereof. The views and opinions of authors expressed herein do not necessarily state or reflect those of the United States Government or any agency thereof.

DISCLAIMER

Portions of this document may be illegible in electronic image products. Images are produced from the best available original document.

reduced the temperature fluctuations to ±0.15°F.

Changes in the output control signal were slow to affect the sensor due to the long distance between the KGSS RTD and the mixing valve, and because the KGSS RTD was installed in a thermowell. The RTD was replaced by a direct-immersion RTD and was relocated immediately downstream of the pump. This permitted improved tuning of the secondary loop with PI control. The control algorithm (Johnson Metasys with "tune override" that imposes "stronger" PID parameters when the temperature error deviates by more than a set amount) was removed, and traditional PI tuning was implemented. These modifications resulted in KGSS stability on the order of ±0.1 to 0.2°F and LCL stability of ±0.1°F.

Valve tuning is a critical element in system control and tuning the 3-way mixing valves in the LCLs (controlled by Johnson Controls LCP controllers) was not routine. The Johnson LCP has no specific "tune override" feature, but its response to temperature disturbances did not seem "classical." As a test, a Watlow 965FDO controller was substituted for one of the Johnson LCP controllers for a short time, during which it was observed that valve tuning in the classic closed-loop manner was possible [3]. Based on these results, it was decided to search for a high-resolution, stand-alone temperature controller that could be tuned to the required tolerance.

An error-correcting feedback control system can only take action after the error is detected. Temperature changes had to be recorded on a significantly smaller level than the acceptable tolerance. The Johnson Controls LCP was able to discern changes only as small as 0.06°F. Thus, 60% of the available tolerance had already been expended before control action was initiated.

The Honeywell Progeny, whose A/D converter can resolve changes less than 0.01°F when scaled across the 40°F range of the applicable transmitter, was chosen as the stand-alone controller. Using this controller, steady-state temperature was controllable to within ±0.05°F.

Coolant flow through the LCL HXs was reduced so that the control valves passed 65-75% of the load-side flow through the HXs, since regulation sensitivity improves if a larger flow is heated or cooled. As the coolant flow was reduced below 2 or 3 gpm, however, the HX demanded 100% of the load flow yet process temperature continued to climb. At such a reduced flow, the coolant transitioned from turbulent to laminar flow resulting in a loss of overall heat transfer coefficient. The HX surface area was reduced by 50% by rotating one endcap of the 4-pass shell-and-tube unit by 90° so coolant passes through only half of the tubes.

Coolant flow rate in each LCL is regulated at a fixed, heat-load-dependant value of 7-10 gpm by Griswold flow control cartridges. The flow rate is varied until the 3-way control valve on the linac (load) side is 65-75% open at 100% load. The output of the electric heaters is set at a constant value to fix the heat load.

All control units were replaced by Allen-Bradley PLC-5/20 processors with 1771-N4BS analog I/O modules. Temperature changes on the order of 0.003°F can now be discerned. Previously, system noise levels alone were 0.015°F higher than the applicable system resolution.

Other benefits of the Allen-Bradley processors include the ability to tune valves with response characteristics that permit LCL startup from a cold condition to a steady operating temperature without supervision. Use of Allen-Bradley PLCs permits communication between the LCL water stations and the APS control room. The LCLs can now be operated remotely in "real time" via the EPICS [4] control system. The LCLs now consist of:

1) 3-way Durco ball-type control valves to divert water through or around the HX as required for stable temperature regulation.
2) Worcester series 75 electric control valve actuators with AF-17 positioners with a resolution of 0.5%.
3) Electric heaters to provide fixed heat input rates; rates between 0% and 100% are chosen at setup.
4) 3-wire, direct immersion, 4-s time constant, Minco S603PD8 RTDs.
5) Analog temperature transmitters scaled in the range 85-125°F (Minco TT676PD1QG).
6) Allen-Bradley PLC-5/20s with P/N 1771-NB4S high-resolution analog I/O cards for PID temperature control (the D feature is not used).

Use of a 3-way diverter valve in the load stream rather than a throttling valve in the coolant stream is especially important. An order of magnitude faster temperature response is obtained with the diverter valve since the final temperature is a result of mixing, and flow ratio changes are immediate upon valve movement. Throttling of the coolant flow results in relatively slower response, since the entire mass of the load stream and the mass of the HX surfaces must change temperature.

3 CORROSION MITIGATION

Operating experience with deionized water systems at APS and DESY demonstrates that dissolved oxygen (DO) concentrations ≥20 ppb result in unacceptably high copper corrosion rates. The corrosion is manifested as insoluble particles of CuO and Cu_2O that agglomerate in the system after removal from the parent surface. Filtration to levels as low as 0.5 μm is useful, but build-up of copper oxides is regularly found in system components when DO levels are elevated. Components that regulate flow become clogged where significant pressure reduction occurs. Components subject to clogging are orifices, valves, self-regulating flow-control valves ("Griswolds"), and pressure regulators that have orifices very small compared to their inlets and outlets. Agglomeration also occurs on pump impellers.

In a closed-loop system with a low rate of oxygen ingress and without facilities to remove DO, corrosion can occur at a rate greater than the influx of new oxygen. This results in a significant reduction of DO in the

system. Unfortunately, the reduction occurs at the expense of components that should be protected from corrosion but are in fact consumed.

The LCLs are pseudo-closed-loop systems. The water flows in a closed loop; however, there is a constant in-leakage of oxygen through the open-top expansion tanks. A reliable DO monitor, the Orbisphere Laboratories model 3660 with accuracy ±1% or ±1 ppb, whichever is greater, was installed in the closed loop. We saw that DO in the loop tended toward its saturated value of around 4000 ppb when the oxygen scavenger was removed.

In December 1998, 2.5 l of oxygen-scavenging resin (type 1 strong base anion in sulfite form) was installed in each LCL upstream of the mixed-bed resin of the "slipstream" that is used for continuous polishing of the closed loop. The slipstream is installed in the loop as indicated in Fig. 2. Flow through the resins is in parallel with linac components. The open top expansion tank and fill tube at the pump suction are also indicated in Fig. 2.

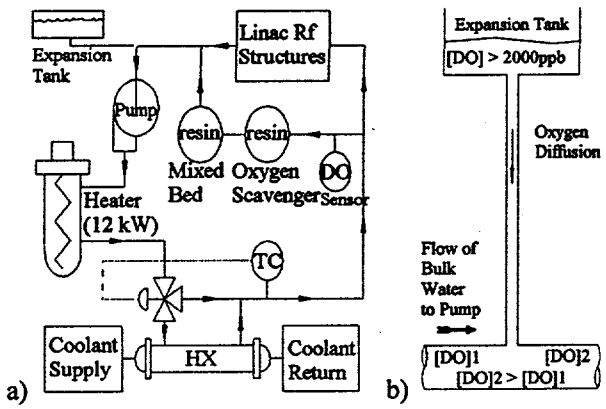

Figure 2: a) Detail of an LCL showing location of polishing resins and the DO sensor; b) Oxygen diffusion mechanism from expansion tank to bulk water flow.

With a water flow of 3.5 gpm through the resins, the DO content was reduced to 30 ppb. It fell to 24 ppb after the slipstream flow was increased to 7.5 gpm. DO data taken over an 11-day period are shown in Fig. 3.

We expected that use of oxygen-scavenging resin in a closed loop would reduce DO levels below 5 ppb, yet this was not observed. The anticipated, but yet unproved, explanation of this phenomenon is the influx of oxygen through the open-top tank. In another APS system, water residing in a stagnant portion of piping and contaminated with oxygen was a source of DO to the bulk flow of "oxygen-free" water flowing past the stagnant portion. Fig. 2b illustrates a similar situation in the LCL. As oxygen-free water flows by the line to the expansion tank, oxygen diffuses from the stagnant water to the flowing bulk. Removing oxygen in this manner is time consuming and inefficient. In other APS systems, lines were installed to flush the stagnant piping sections and clean the water.

The open top expansion tanks in the LCLs are clearly a source of diffusing oxygen to the closed loop. Plans are in place to isolate the expansion tanks from the closed loops and provide oxygen-free makeup from a separate source.

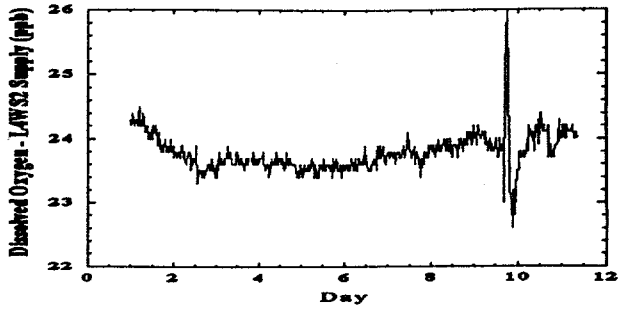

Figure 3: Dissolved oxygen [ppb] over an 11-day period in one LCL with oxygen-scavenging resin.

4 CONCLUSIONS

Temperature regulation of high-power rf components to within ±0.05°F has been achieved at the APS linac. The system responds quickly to changes in rf power load and maintains long-term temperature stability. The water system and the techniques to optimize the temperature are described more completely in [5]. Efforts to reduce copper corrosion by reducing the DO content of the water are well underway. Radiation and friction can also lead to erosion and corrosion and will be studied in our systems.

5 ACKNOWLEDGMENTS

The authors would like to acknowledge R. Damm for leading efforts to improve system performance; E. Swetin for installing holding tanks, downsizing HXs, and assisting with KGSS tuning; C. Putnam and H. DeLeon for implementing the PLCs; N. Arnold and M. Kramer for implementing network communication; R. Kneebone and W. Matz for implementing changes prior to 1996; D. Haid for graphics advice; and C. Eyberger and K. Jaje for editorial assistance. We are also very grateful to our colleagues at DESY who made us aware of their data [6] in time to learn the causes of copper loss and begin efforts to mitigate DI-water-related copper loss in the APS linac long before failures occur.

6 REFERENCES

[1] M. White et al., "Construction, Commissioning and Operational Experience of the Advanced Photon Source (APS) Linear Accelerator," Proc. of the XVIII Intl. Linear Accelerator Conf., pp. 315-319 (1996).

[2] R. Dortwegt, S. Pasky, M. White, "Improved Temperature Regulation of APS Linac Rf Components," Proc. of the XIX Int'l. Linac Conf., Chicago, IL, USA, 23-38 August 1998, pp. 1001-1003.

[3] P. W. Murrill, "Fundamentals of Process Control Theory," 2nd Ed., Instrument Society of America, pp. 126-129 (1991).

[4] W. P. McDowell et al., "Status and Design of the Advanced Photon Source Control System," Proc. of the 1993 Particle Accelerator Conference, Washington, DC, May 1993, pp. 1960-1962 (1993).

[5] R. Dortwegt, S. Pasky, M. White, "Temperature Regulation of the APS Linac High-Power Rf Components," APS-LS Note, to be publ.

[6] H. Poggensee, "Korrosionsursachen und Korrosionsverhinderung in Kupferkuehlleitungen im LINACII," DESY M-93-04, June 93.