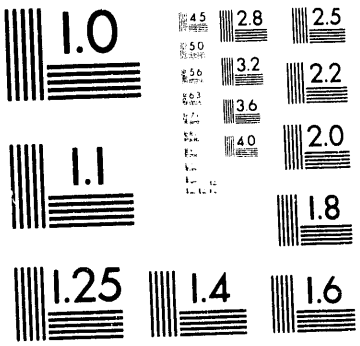
1.0
2.8
2.5
3.2
2.2
3.6
4.0
2.0
1.1
1.8
1.25
1.4
1.6

1 of 1

LA-UR -93-2560

Los Alamos National Laboratory is operated by the University of California for the United States Department of Energy under contract W-7405-ENG-36.

TITLE: STUDIES ON THE PHOTOCHEMICAL AND THERMAL DISSOCIATION SYNTHESIS OF KRYPTON DIFLUORIDE

AUTHOR(S): Scott A. Kinkead, INC-4

Jerry Foropoulous, Jr., NMT-6

Richard J. Kissane, HS-5

John D. Purson, MST-3

SUBMITTED TO: ACS Symposium Series: Fluorine and Fluorine-Containing Substituent Groups in Inorganic Chemistry

DISCLAIMER

This report was prepared as an account of work sponsored by an agency of the United States Government. Neither the United States Government nor any agency thereof, nor any of their employees, makes any warranty, express or implied, or assumes any legal liability or responsibility for the accuracy, completeness, or usefulness of any information, apparatus, product, or process disclosed, or represents that its use would not infringe privately owned rights. Reference herein to any specific commercial product, process, or service by trade name, trademark, manufacturer, or otherwise does not necessarily constitute or imply its endorsement, recommendation, or favoring by the United States Government or any agency thereof. The views and opinions of authors expressed herein do not necessarily state or reflect those of the United States Government or any agency thereof.

AUG 05

By acceptance of this article, the publisher recognizes that the U.S. Government retains a nonexclusive, royalty-free license to publish or reproduce the published form of this contribution, or to allow others to do so, for U.S. Government purposes.

The Los Alamos National Laboratory requests that the publisher identify this article as work performed under the auspices of the U.S. Department of Energy.

Los Alamos

Los Alamos National Laboratory
Los Alamos, New Mexico 87545

MASTER

DISTRIBUTION OF THIS DOCUMENT IS UNLIMITED

STUDIES ON THE PHOTOCHEMICAL AND THERMAL DISSOCIATION SYNTHESIS OF KRYPTON DIFLUORIDE

by

S. A. Kinkead, J. R. FitzPatrick, J. Foropoulos Jr., R. J. Kissane, and J. D. Purson

Isotope and Nuclear Chemistry Division, Nuclear Material Division, Health and Safety Division, and Material Science Division, Los Alamos National Laboratory, Los Alamos, NM 87545

Like dioxygen difluoride (O_2F_2), KrF_2 can be produced by thermal dissociation or photochemical synthesis from the elements; however, the yields are invariably much less than those obtained for O_2F_2. For example, while irradiation of liquid O_2/F_2 mixtures at -196° C through a sapphire window with an unfiltered 1000W UV lamp provides in excess of 3g of O_2F_2 per hour, the yield of KrF_2 under identical circumstances is approximately 125 mg/hr. In this report, the yield of KrF_2 in quartz and Pyrex™ photochemical reactors has been examined as a function of irradiation wavelength, irradiation power, and Kr: F_2 mole ratio. The UV-Visible spectrum of KrF_2 has also been recorded for comparison with earlier work, and the quantum yield for photodissociation at two wavelengths determined. The synthesis of KrF_2 using large thermal gradients has also been examined using resistively heated nickel filaments to thermally dissociate the F_2 in close proximity to liquid nitrogen-cooled metal surfaces. As a net result, KrF_2 has been produced in yields in excess of 1.75 g/hr for extended periods in photochemical systems, and 2.3 g/hr for shorter periods in thermally dissociative reactors. This paper summarizes the results of examining parametrically several different types of reactors for efficiency of producing krypton difluoride.

Introduction.

Krypton difluoride, the last of the binary noble gas fluorides to be discovered, has been shown to be one of the strongest oxidizers known, rivaling PtF_6 and O_2F_2 in its ability to oxidize Pu(IV) to PuF_6*(1,2)*. In addition, this reagent has found a unique place in the repertoire of preparative fluorine chemistry and has been used to prepare a wide variety of novel materials, including AgF_3 *(3)*, *cis*-OsO_2F_4 *(4)*, numerous ClF_6^+ (and BrF_6^+) compounds *(5)*, and other novel materials. In addition to its value in the synthesis of novel and known high-valent inorganic compounds, krypton difluoride has been evaluated for use as an agent for decontaminating equipment which has been used for plutonium processing, as well as a storable solid precursor for a chemically-pumped KrF laser. Both of these applications, as well as other potential commercial applications require a greater availability of the reagent. The two syntheses discussed here are extensions of well-known methods for preparing a variety of high-valent inorganic materials, and offer relatively convenient routes to useful quantities of KrF_2. While dioxygen difluoride (FOOF) is more reactive than KrF_2 at subambient temperatures, the poorer thermal stability of FOOF at room temperature renders this material less attractive for many applications. For example, where apparatus cannot be conveniently cooled to subambient temperatures, or where the necessary equipment is unavailable to produce O_2F_2 or $O_2F\cdot$ in-situ in sufficient quantities, KrF_2 is far easier to store, handle, and much more efficient in fluorinating ability. The striking contrast in ambient temperature-low temperature behavior is a reflection of the widely differing volatilities as well as thermal stabilities, as shown in Table I below. In practice, KrF_2 and O_2F_2 are complementary in their fluorination capabilities.

Table I. Some Relevant Properties of KrF_2 and O_2F_2.

Property	KrF_2*(6)*	O_2F_2*(7)*
Melting Point (°C)	+77 (subl.,dec.)*(8)*	-163.5
Boiling Point (°C)	--	-57 (dec.)
Solubility in HF (wt %)	200	>11*
Decomposition at -78°C (%/day)	none	4.3*(9)*
Vapor Pressure at -78°C (torr)	0	~240
Lifetime at 25°C	days	3 sec. *(10)*
Vapor Pressure at 25° C (torr)	134	»1000

*at -78° C

Unlike the binary xenon fluorides, KrF_2 cannot be prepared by photolysis of the elements at room temperature nor by high temperature-high pressure methods. Also unlike the binary xenon fluorides, there has been little success in achieving a higher yield (i.e. multiple grams per hour) synthesis of KrF_2. Aside from oxidative fluorinations, the predominate reactions of KrF_2 are the formation of KrF^+ and $Kr_2F_3^+$ salts, although the preparation of $Kr(OTeF_5)_2$ as an unstable intermediate has been claimed *(11)* and the unusual salts $[R_f\text{–}Kr\text{–}N{\equiv}C\text{–}H]^+ AsF_6^-$ [R_f = F, CF_3, C_2F_5, n-C_3F_7] containing the novel Kr–N bond have recently been reported *(12,13)*.

Numerous methods have been employed to prepare KrF_2, including electric discharge *(14,15)*, photochemical *(16)* or electron beam *(17)* irradiation, and proton (10 MeV) *(18)* or α (40 MeV) bombardment *(11)*. Irrespective of the method of synthesis, a common feature of all of these preparations is that low temperatures (<-150°C) are required to achieve high yields of the product. Thus, while KrF_2 has been prepared at temperatures as high as -60° C (*via* proton bombardment) and at -150° C (electron beam irradiation), better yields are generally obtained at much lower temperatures; e.g. -196° C for UV photolysis or -183° C for electric discharge. The literature yield for early photochemical synthesis was reported to be 200 mg/hr *(19)* for a 2.5 kW UV lamp, while electric discharge has been reported to provide as much as 250 mg/hr *(1)*. For comparison, the yield of O_2F_2 under conditions of photochemical synthesis is of the order of 3g/hr *(7)*. In spite of the lower yields of KrF_2 reported from photochemical preparation, later reports *(20)* suggest that a substantial improvement in the yield is possible.

In a unique preparation, Bezmel'nitsyn and coworkers have reported the synthesis of KrF_2 using thermally generated atomic fluorine *(21)*. In this synthesis, large thermal gradients (>900° C/cm) are created using a resistively heated nickel filament—which catalytically and thermally dissociates elemental fluorine—in close proximity to a cold surface covered with solid krypton. According to the authors, the filament temperature, distance from the wall, and pretreatment are critical parameters (the latter being poorly defined) in the operation of this reactor. Under proper conditions, optimum yields of this reactor (at a filament temperature of 680° C and 1 cm filament-wall distance) are in the range of 5-6 g/hr, far in excess of any other known preparation of KrF_2. According to the authors, this design is also amenable to the large-scale production of other strong oxidizers such as O_2F_2 and chlorine- and nitrogen fluorides and oxyfluorides. In this report, we investigate two useful preparations, and relevant physical and chemical characteristics of KrF_2.

Experimental.

[CAUTION: Elemental fluorine and krypton difluoride are extremely potent oxidizers, and react violently with skin, water, or organic matter. Contact with these materials should be scrupulously avoided. In addition, condensed liquid fluorine and solid krypton, used in both of these syntheses, can rupture apparatus if allowed to warm beyond their boiling points (-187.9° and -152° C, respectively).]

Materials. Krypton (Linde, Research grade or Spectra Gases Inc. 99.995% purity) was used as received without further purification. Fluorine (Air Products and Chemicals Inc., nominal 98%) was purified by passing the gas through two NaF traps to remove HF and SiF_4. Ultrapure fluorine was prepared by the method of Asprey *(22)*. Boron trifluoride (Ozark-Mahoning) was used as received after verification of its infrared spectrum.

General. Infrared spectra were recorded on either a Nicolet model 20SX FTIR infrared spectrometer or a Perkin-Elmer model 283 spectrometer using a stainless steel 10 cm-pathlength gas cell fitted with AgCl windows. UV-visible spectra were recorded on a Perkin-Elmer model 330 UV-VIS-NIR spectrometer, using a 9.4 cm nickel cell fitted with UV grade sapphire windows (Saphikon) and a portable metal vacuum line and pumping station. To measure quantum yields, this same cell and vacuum system was used in conjunction with a Lambda-Physik model EMG-102ES excimer laser operating at 308 nm, or a Questek model 2140 excimer laser operating at 248 nm. Laser power (and hence photon input) was measured with a Scientech 362 power meter, while the KrF_2 decomposed was measured from pressure increase in the cell after correction for thermal decomposition and verification of the amount lost by FTIR.

Photochemical Synthesis Apparatus. A metal manifold was used to handle all gases and products. All reactants were measured by manometric techniques in either of the two calibrated ballast volumes on the gas handling line. The amount of KrF_2 product was determined by weighing in an all-metal stainless 75 ml stainless steel cylinder (Whitey™) fitted with 1/4" Nupro™ Bellows valves. An all-quartz photolysis lamp well (Ace model 7858-45 vacuum insulated immersion well with an annular quartz reactor similar to that shown in ref. *20*; see Figure 1a.) was used to with a Canrad-Hanovia medium pressure 450 watt Hg lamp. The central tube, closed at one end, of either quartz, Vycor™, or Pyrex™ glass, filtered the light as necessary. The reactor outer section is patterned after the design of Šmalc et al.*(20)*. To measure the yield with 550 and 1200 Watt immersion lamps, a larger version of the immersion well reactor was constructed (Figure 1b.). Apart from its size, the major difference from the smaller reactor is that only

automatic dual-setpoint liquid nitrogen controller (Thermionics Laboratory, Inc. model LNC-400) was employed with Neslab RTE-110 and CFT-25 recirculating chillers—operating in series and fitted with an Ace model 12160 water flow power cut-off sensor and power supply to shut down the lamp power supply in the event water flow is interrupted—cooled the reactor and lamp well, respectively. Should the liquid nitrogen coolant supply be lost an air actuated valve (Varian model NW-16)—controlled by the relay from an MKS model PDR-C-1B power supply readout and a 1000 torr MKS model 222CA pressure transducer—will open at 600 torr, venting the gases into a fume hood.

Thermal Synthesis Apparatus Several hot-wire reactors similar in design to that used by Bezmel'nitsyn et. al. *(21)* have been constructed; the latest design, of stainless steel and Monel is as follows. The smaller reactor consisted of a 1.5 in. dia. x 20 in. long stainless steel tube with MDC 2.75 in. knife-edge (Del-Seal™) flanges welded to the top and bottom. The filament was a coiled nickel 200 rod (Castle metals) or nickel 200 chromatography tubing (0.125 in. dia., Alltech). The electrical feedthrough was an MDC model MMC-150 medium current flanged feedthrough. A larger reactor was also designed and constructed. The body of this reactor was constructed of a 4 in. dia. by 22 in. long section of schedule 40 Monel™ pipe with an 8 in. dia. Monel™ knife-edge flange machined and welded to the end of the pipe. The bottom of the reactor was capped with a 0.5 in. thick section of Monel™ plate; the top of the reactor was an eight inch stainless MDC knife–edge flange fitted with a gas inlet and dual medium current electrical feedthroughs as well as connectors for a pressure transducer and observation/temperature measurement window. Electrical feedthroughs were MDC Vacuum Products Corporation models MCT-150 or MMC-150. To heat the nickel filament, a Lambda model LK-361-FMOV DC or Electronic Measurements model 40-275-1-O-0650-OV DC power supply was connected to the electrical feedthroughs. The filaments consisted of a 0.0625 in. dia. nickel rod (nickel 200, Castle Metals) or 0.0625 in. dia. nickel 200 chromatography tubing (Alltech) wound around a 0.375 in. dia. alumina tube to provide mechanical support at high temperatures. Copper-Constantan (E type) thermocouples were attached to the outside of the reactor to monitor the surface temperature during the reaction. A window at the top of the reactor provides a means to monitor the filament temperature and condition. The temperature of the filament was determined by visual comparison with a blackbody source at 700° C. An infrared pyrometer (Omega model OS-2000AS-CSS) focused through an AgCl window was thought to provide more accurate temperature measurements; however, this proved not to be the case and this method was abandonded. Reactants were introduced through a gas inlet at the top of the reactor; the lower inlet permitted recirculation of the reactants as well as removal of the products at the conclusion of the experiments. A three-

liter ballast can allowed the fluorine to be admitted at more or less constant pressure. When larger scale KrF_2 experiments were conducted, a recirculating system employing a Metal Bellows model 602 recirculating pump and larger steel ballast volumes was constructed. The KrF_2 product was purified from Kr and F_2 through a stainless steel trap cooled to -78° C and transferred to the storage vessel (a 300 ml Whitey™ SS-304 cylinder fitted with a dip tube and medium pressure autoclave engineers valves).

Photochemical Synthesis Procedure. To prevent freezing of water in the lamp well, cooling water was circulated through the water jacket prior to cooling the reactor with liquid nitrogen. After the lower part of the reactor was at -196° C, krypton was condensed into the reactor to a residual pressure of 2–10 torr. Then, after any other reagent (e.g.BF_3) was added, elemental fluorine was added to the reactor after which the lamp was ignited. During the course of the reaction, the liquid nitrogen level was maintained with the liquid nitrogen level controller, connected to a pressurized 160 liter dewar. At the completion of the reaction, residual F_2 was removed through a trap containing coarse charcoal while the reactor was held at -196° C. [For larger quantities of F_2, a small (150ml) stainless steel cylinder (Whitey™) attached to the line was cooled to -196° C, and the dewar around the reactor was replaced with one containing liquid oxygen (b.p. -183°C) to distill the fluorine back into a 10 liter ballast volume on the vacuum line for reuse.] Subsequently, the removable product trap was cooled to -78° C, and a 300 ml Kr storage cylinder (Whitey™) containing molecular sieves (type 4A, 30g) cooled to -196° C connected in line after the trap, and the dewar surrounding the reactor was gradually lowered while maintaining the pressure below 200 torr to remove the krypton to the storage cylinder for subsequent reuse (Figure 1c.). When all the krypton had been evacuated, the reactor was gently warmed with a heat gun or warm water to sublime the KrF_2 to the trap, and the product weighed. Finally, the KrF_2 was transferred to a nickel or stainless cylinder for storage at -78° C.

Thermal Synthesis Procedure. The filament was preconditioned by heating to 700°C first in an atmosphere of hydrogen to reduce any nickel fluoride passivation to metal, after which the filament was heated in oxygen according to the procedure of Bezmel'nitsyn *(21)*. After preconditioning the filament, a 25 liter dewar of liquid nitrogen was raised around the reactor to cool it to -196° C. To cover the reactor walls with a uniform layer of krypton, the three liter ballast can was first filled to a pressure of 700 torr (~110 mmole), and the gas rapidly admitted to the cold reactor. By visual examination, this method resulted in a more or less uniform layer of Kr. With the valve between the reactor and ballast can open, the system was filled to a pressure of approximately 40 torr of F_2. The power supply was turned on, and the current slowly increased to achieve the proper

filament temperature. Once the F_2 pressure began to decrease (after an initial rise due to dissociation and heating), fluorine was added continuously to maintain the pressure nominally at 40 torr. To maintain the cooling capability, liquid nitrogen was continuously added *via* a similar arrangement as in the photolytic synthesis. At the completion of the reaction (when the fluorine consumption approached zero), the power supply was turned off and the residual fluorine pumped out through a trap of coarse charcoal. The dewar was lowered slowly to maintain a pressure in the reactor of less than 20 torr, and the Kr and KrF_2 were pumped through the purification traps held at -78° and -196° C. The remainder of the purification was the same as in the photosynthetic preparation.

Results and Discussion.

Photochemical Dissociation of Fluorine. While the synthesis and properties of small laboratory quantities of KrF_2 have long been worked out, a careful reexamination of the relevant spectroscopic data was in order before the syntheses were scaled to multigram size. In the case of the photosynthetic preparation, this was essential both to confirm the reported UV-visible spectra of KrF_2 *(23)*, and to correlate the absorption features with yield. If, for example, the absorption band at 220 nm reported by the Russian workers was photodissociative, then wavelengths in this region must be carefully filtered out if the yields are to be maximized. The resulting spectrum in Figure 3 is shown corrected and uncorrected for the decomposition of KrF_2 during the course of the experiment (nominally 10-15 % per experiment). The abnormally high decomposition resulted from the proximity of the spectrometer source to the sample compartment in our instrument, which in turn caused the sample cell temperature to be in excess of 35° C. While the Russian report shows only a broad rise from 320 to 230 nm (ε = 147 l/mole-cm), the spectrum we obtained shows a less intense absorption at 218 nm (ε = 105 l/mole-cm) with another, more intense feature near 188–190 nm (ε = 250 l/mole-cm). The position and shape of this latter band varied slightly from experiment to experiment, probably due to the intensity of the band as well as instrument resolution near the spectrometer wavelength limit (185nm).

The dissociative quantum yields were measured at 248 nm and 308 nm to determine if the absorption feature which has its maximum at 218 nm arises from a dissociative electronic transition; e. g. $\sigma \rightarrow \sigma^*$. By measuring the photodecomposition reaction, e.g.

$$KrF_{2(g)} \xrightarrow{h\nu} Kr_{(g)} + F_{2(g)} \qquad (1)$$

a single reaction (1) may be examined for its effect on the formation of KrF_2. Obviously other reactions such as those shown below, can play a significant role in the photodecomposition of KrF_2 by initiating or propagating a chain reaction.

$$F\cdot + KrF_2 \longrightarrow F_2 + F\cdot + Kr \quad (2)$$

$$KrF_2 + M \longrightarrow Kr + MF_n + \tfrac{1}{2}F_2 \quad (3)$$

$$KrF_2 \xrightarrow{h\nu} KrF_2^* \xrightarrow{KrF_2} 2Kr + F_2 + 2F\cdot \quad (4)$$

If instead the quantum yield for photosynthesis is measured, only the overall reaction can be studied; i. e., the photodecomposition of either KrF_2 or $KrF\cdot$, which may occur coincidentally, are indistinguishable. Also, the quantum yields are so low—approximately 0.02 for solid Kr and liquid F_2 *(26)*—as to require an extended measurement period and correspondingly difficult-to-maintain control over reaction conditions. Since the average Kr-F bond energy in KrF_2 is only 10–12 Kcal/mole (~0.5 eV), an electronic transition at 218 nm (5.7 eV) is more than energetic enough to result in dissociation. As seen below in Table II. the quantum yield at 248 nm is near unity, indicating a strongly dissociative process, and substantially higher than that at 308 nm.

Table II. Quantum Yield for the Photodecomposition of KrF_2.

Wavelength (nm)	Laser Power (mJ/pulse)	KrF_2 Init. Pressure (torr)	mmol KrF_2 Photolyzed*	Φ (mmol/quanta)
248	140	11.23	0.019	1.17
	139	20.00	0.035	1.19
308	51.5	12.12	0.0011	0.45
	49.0	20.10	0.0045	0.53

*5 min. photolysis, corrected for thermal decomposition.

From these experiments, hard UV radiation has a deleterious effect on KrF_2 formation. To determine the magnitude of the effect of filtering short wavelength UV light on the yield of material, as as determined by the effect on the overall synthesis, experiments using an immersion well reactor, with a variable wavelength cutoff, were conducted. Using a constant krypton to fluorine ratio of 4:1 (200:50 mmol), KrF_2 was prepared employing alternately a quartz, Vycor™ 7913, and a Pyrex™ 7740 glass insert. While there was only a slight difference in yield between experiments where a quartz or Vycor insert was used, a dramatic effect was observed when Pyrex was substituted. The results, shown in Table III, are striking evidence of the deleterious effect of short wavelengths on the production of KrF_2.

Table III. Synthesis of KrF_2 in Well Reactor

INSERT MATERIAL	UV CUTOFF (nm)‡	YIELD (mg/hr)	COMMENTS
Quartz	170	130† 161† 138† 193† 155† 171◊	(avg. = 158 ± 20)
Vycor 7913	210	222* 139* 250†	(avg. = 204 ± 30)
Pyrex 7740	280	484◊ 557◊ 456◊	(avg. = 507 ± 50) 10 mmol BF_3 added

Note: All experiments are at least 3 hours in length.
‡ Wavelength at 0% Transmission.
* Amount by thermal decomposition of product.
† By weight in a Teflon FEP/PFA trap.
◊ By weight in a Glass trap.

From this data, as well as the previous data on the photodissociative quantum yield, it is evident that short wavelength UV light is extremely detrimental to the synthesis of KrF_2 and must be carefully filtered out. We also find that earlier reports that addition of BF_3 enhances the formation of KrF_2 either with filtered or unfiltered (data not shown) UV light are unsupported *(25)*.

In the above experiments, the krypton fraction was fixed at 80 mole-% (4 : 1 Kr : F_2) based on information provided by Slovenian workers *(24)* that the best yields of KrF_2 were obtained at this ratio. To confirm this data, yields were obtained for krypton mole fractions from 025 to 0.90 (with the total amount of reactants held constant at 250 mmol). The resulting data are plotted in Figure 4, showing that a maximum in the yield curve exists near 80 mole % krypton, confirming the work of Šmalc and coworkers *(20)*.

Since, for the synthesis of O_2F_2 a ratio of oxygen to fluorine of 1 provides the best yields, the markedly higher yields at 4 : 1 vs. 1 : 1 Kr : F_2 suggest that the formation of KrF_2 may involve a different mechanism than for O_2F_2 formation. The synthesis of O_2F_2 has been well studied and likely proceeds *via* the following series of reactions:

$$F_2 \xrightleftharpoons{h\nu} 2F\cdot \tag{5}$$

$$F\cdot + O_2 \longrightarrow O_2F\cdot \tag{6}$$

$$O_2F\cdot + F\cdot \longrightarrow O_2F_2 \tag{7}$$

$$2F\cdot + O_2 \longrightarrow O_2F_2 \tag{8}$$

$$2O_2F\cdot \rightleftharpoons O_4F_2 \text{ [i.e. F–O-O····O-O–F]} \tag{9}$$

$$O_4F_2 \rightleftharpoons O_2F_2 + O_2 \tag{10}$$

All of these reactions except (8) involve the stable intermediate $O_2F\cdot$ species, and are coincidentally two-body collision processes. Being a three-body process, reaction (8) would be expected to contribute less to the overall yield than (6) and (7). In the case of KrF_2, the intermediate $KrF\cdot$ radical is unstable at room temperature and is stable only at cryogenic temperatures *(25)*. According to Artyukhov and coworkers *(26)*, $KrF\cdot$ may be stabilized by association or electron sharing with other krypton atoms (i. e. a Van der Waals molecule such as Kr–F·--Kr). This may explain why the synthesis of KrF_2 from gaseous Kr and F_2 proceeds with poorer yields (quantum yields less than 0.001 vs. 0.021 in liquid fluorine-solid krypton *(26)*) as well as why larger proportions of krypton are required for optimum yields.

In the studies of the optimum Kr:F mole ratio and irradiation wavelength , we were unable to confirm the claim of Slovenian workers to produce in excess of 1.0 grams of KrF_2. However, we believe this in fact is a reflection of the scale of reaction. For example, while the total amount of starting material in many of these experiments never exceeded 250 mmol (e.g. 200 mmol Kr and 50 mmol F_2 at 4:1 Kr:F_2) or 0.25 mole, Šmalc and coworkers *(20)* routinely use 4 moles Kr and 1 mole F_2 in a similar size reactor (i.e. 100–200 ml internal volume). When the reaction was scaled to 1.25 mole reactants (0.25 mole F_2 and 1 mole Kr), yields of 1.0–1.1 g/hr over 20–24 hours were obtained. Obviously, the increase in yield supports the Russian workers' data of the higher quantum yield in the solid phase versus the gas phase *(26)*. Because of the high initial Kr:F_2 ratio, the extended reaction time (20–24 h), and the high rate of formation of KrF_2, we expect that a substantial increase of the Kr:F_2 ratio will occur with time, shifting to a lower than optimum rate. To avoid this degradation in the expected yield, fluorine is periodically added to sustain the ideal Kr:F_2 ratio.

Substantial dependence of the hourly yield on lamp power were also observed. As can be readily seen in Table IV, use of a 550 Watt lamp provided a measurable over the use of a 450 watt lamp.

Table IV. Photosynthetic Yields of KrF_2 with Varying Lamp Power.

Lamp Power (Watts)	Total Yield (g)	Hourly Yield (g/hr)	Comments
450	22.	1.1	1 mole Kr; 0.25 mole F_2
550	24.4	1.22	2 mole Kr; 0.5 mole F_2; larger reactor

While some experiments using a 1200 Watt medium-pressure Canrad-Hanovia UV lamp in the larger reactor have been done, the large amount of heat produced by this lamp repeatedly tripped the high-temperature breaker. In one experiment, 40.9 grams of KrF_2 were produced in 23 hours; however this must be regarded as a minimum since the lamp chiller required replacement in the middle of the experiment, resulting in approximately a two-hour interruption in the experiment. From this data, we believe it should be possible to further increase the synthesis rate by additional increases in lamp power.

Thermal Dissociation of Fluorine. The first step in the synthesis of KrF_2 or many other highly oxidized fluorine compounds is the dissociation of F_2 into atomic fluorine. While thermal dissociation of fluorine is often used in the synthesis of thermodynamically stable fluorine compounds, the rapid decomposition of thermally unstable compounds in the presence of hot fluorine atoms limits the utility of this method for such materials (e.g. O_2F_2, KrF_2). However, the use of large thermal gradients provides an analogous situation to the use of UV photolysis in low temperature environments: Energetic species (fluorine atoms) created in close proximity to unstable products or intermediates. From thermochemical tables *(27)*, elemental fluorine is about 18-22% dissociated at 700° C, depending on pressure. In order to take advantage of the extensive dissociation of fluorine at relatively low energies, it is essential to rapidly quench the KrF_2 reaction product. The principle here is to generate large quantities of atomic fluorine (i.e. at low pressures) in close proximity to the cold Kr to achieve rapid conversion of the short-lived $KrF\cdot$ to KrF_2, or alternately to sustain a high rate of three-body kinetics ($2F\cdot + Kr$). To achieve this result, Bezmel'nitsyn and coworkers *(21)* employed thermal gradients of up to 900°/cm to keep Kr, KrF_2, and $KrF\cdot$ radicals frozen in the immediate vicinity of hot fluorine. A coiled nickel filament, located in the center of the reactor, is resistively heated to 680–700° C using a DC power supply to catalytically dissociate the fluorine. According to this report, at a distance between the filament and wall of 1 cm, the yield of KrF_2 is 6.0 grams in one hour. Not surprisingly, the yield of KrF_2 drops off rapidly with distance to the wall: At 2 cm the yield is 5 g/hr; at 4 cm, 2.8 g/hr. A notable

feature of this report is the emphasis on pretreating the filament by heating to >800°C in an oxygen atmosphere for a brief period of time, which forms a high surface area oxide coating. Presumably, subsequent reaction of this coating in a fluorine atmosphere would provide a higher surface-area fluoride coating capable of producing larger quantities of atomic fluorine. Experimental evaluation of filament pretreatment by resistively heating in an oxygen atmosphere at 800–900° C produced no measurable effect on the yield, although reaction of the nickel filament with oxygen was evident: O_2 pressure drops of 50–100 torr were reproducibly observed.

Since these yields are the highest ever reported for the production of KrF_2, we sought to confirm these values in our own laboratories. Using the Soviet design as a point of departure, a reactor was designed and constructed to test this preparation. Although a complete discussion of the thermal dissociation reactor is inappropriate for this report, the results of scoping experiments are promising although highly variable. In a series of fourteen experiments to evaluate baseline conditions for this reactor, yields in excess of 2 g/h have been obtained. While yields were not measured for some individual experiments, average yields (cumulative KrF_2 produced per operating time) were obtained for a series of experiments, as shown in Table V, below.

Table V. YIELDS OF KrF_2 FROM A HOT-WIRE REACTOR

EXPERIMENT	YIELD (mg/hr)	COMMENTS
1	200.*	0.062 in. dia. Ni-61 welding rod§ ; rapid burnout, extensive corrosion of filament.
2	250.*	
3	125.*	Pure Ni (Ni-200) filament
4-8	950.†	Five one-hour experiments without removing product between reactions.
9-14	880.†	Six one-hour experiments without removing product between reactions.
15	830.†	Five-hour experiment (4. g product)
16	2300.†	2 hour exp't

Conditions: Filament electrically heated to ~700 ± 100° C; approximately 1.0 cm from reactor wall.

* Estimated from fluorine pressure drop.

§Ni-61 composition: 96.3% Ni, 2.95% Ti, 0.43% Si, 0.20% Mn; C, Fe, S, Cu, Al, P all <0.1%.

† By weighing in a S. S. storage vessel.

Difficulties in measuring the filament temperature prevented more precise control of this parameter, and obviously affected the reproducibility as well as the optimum yield. In experiments 4 -14, over 20 grams of KrF_2 were produced in multiple 2 to 4 hour runs. Even though there were significant reliability problems with the filaments, this indicates a substantial capability to produce multigram amounts of material. Because the yield falls off rapidly after approximately an hour, most of the experiments reported here are of short duration, with repeated additions of krypton to the reactor. Due to the promise shown in these early experiments, we plan to continue research with this reactor. To improve reliability and reproducibility, a repeatable method for winding filaments has been developed.

Since it is possible that the surface area of both the heated filaments and cold area of the reactor are crucial variables in this system, a larger reactor was constructed and evaluated. A unique feature of this reactor is that multiple filaments (from four to twelve) could be connected to the current source, increasing the area of the catalytic surface responsible for dissociating fluorine. In spite of the larger cold surface of this reactor

relative to the 1.5 in. dia. reactor, there was no measurable improvement in the KrF_2 production rate, although this reactor has been shown to be capable of producing multigram quantities of XeF_6*(28)*.

Conclusions.

In the synthesis of high-valent inorganic compounds, krypton difluoride enjoys an position shared by few other materials. Not only is it an extremely powerful oxidizer in its own right, but its cationic salts, KrF^+, are quite possibly the strongest oxidizers available aside from the fluorine atom. A large number of novel high valent fluorides, such as AgF_3, ClF_6^+ salts, and others, either require KrF_2 (or KrF^+ salts) for their synthesis or are prepared more easily or more purely with KrF_2. Much of the chemistry of this oxidizer has developed only slowly, due to the specialized equipment and techniques required for its preparation as well as the lower rates which generally occur. The two methods described and evaluated in this paper are the highest yield, most readily adaptable (to the laboratory) routes to this synthetically valuable reagent. Photochemical synthesis provides a high sustained production rate of material, which with proper precautions, can be conducted safely. Thermal gradient synthesis is useful for preparing smaller amounts of KrF_2, and due to the lower pressures and smaller quantities of fluorine involved is inherently safer. In addition, the thermal gradient synthesis technique is easily adapted to the synthesis of other oxidizers such as ClF_5, XeF_6 and O_2F_2 by substitution of ClF_3, Xe, or O_2 for krypton in the synthesis.

Acknowledgements.

The authors gratefully acknowledge the support of the U.S. Department of Energy, Office of Nuclear Material Production. S.K. also acknowledges the support of the USAF Phillips Laboratory, the National Research Council (Office of Eastern European Affairs), the Academy of Arts and Sciences, Slovenia, and the Jožef Stefan Institute, Ljubljana, Slovenia. The support of colleagues at the Los Alamos National Laboratory—Drs. Larned Asprey, P. Gary Eller, Jon Nielsen, and Kent Abney—and at the Jožef Stefan Institute—Prof. Boris Žemva, and Drs. Karel Lutar and Adolf Jesih—also gratefully appreciated.

Literature Cited.

1. Weinstock, B.; Malm, J. G.; Weaver, E. E. *J. Am. Chem. Soc.*, **1961**, *83*, 4310.

2. Asprey, L. B.; Eller, P. G.; Kinkead, S. A.; *Inorg. Chem.*, **1986**, *25*, 670.

3. Žemva, B.; Lutar, K.; Jesih, A.; Casteel, W.J.Jr.; Wilkinson, A.P.; Cox, D.E.; Von Dreele, R.B.; Borrmann, H.; Bartlett, N.; *J. Am. Chem. Soc.*, **1991**, *113*, 4192.

4. Christe, K.O.; Bougon, R., *J.Chem. Soc., Chem. Comm.*, **1992**, *15*, 1056.

5. Christe, K.O.; Wilson, W.W.; Curtis, E.C., *Inorg. Chem.*, **1983**, *22*, 3056.

6. Prusakov, V. N.; Sokolov, V. B.; *Atom. Energ. (Engl. Trans.)*; **1971**; *31*; 990; *Atom. Énerg.*; **1971**; *31*; 259.

7. Streng, A. G.; *Chem. Rev.*; **1963**, *63*, 607.

8. Al-Mukthar, M.; Holloway, J.H.; Hope, E.G.; Schrobilgen, G.J., *J. Chem. Soc., Dalton Trans.*, **1991**, 2831.

9. Kirshenbaum, A.D.; Grosse, A.V. *J. Am. Chem. Soc.*, **1959**, *81*, 1277.

10. Abney, K.D.; Eller, P.G.; Kinkead, S.A.; Kissane, R.J.; Asprey, L.B., *J. Fluorine Chem.*, manuscript in preparation.

11. Jacob, E.; Lentz, D.; Seppelt, K; Simon, A.; *Z. anorg. allgem. Chem.*, **1981**, *472*, 7.

12. Schrobilgen, G.J., *J. Chem. Soc., Chem. Comm*, **1988**, 863.

13. Schrobilgen, G.J., *J. Chem. Soc., Chem. Comm*, **1988**, 1506.

14. Grosse, A. V.; Kirshenbaum, A. D.; Streng, A. G.; Streng, L. V. *Science*, **1963**, *139*, 1047.

15. Schreiner, F; Malm, J. G.; Hindman, J. C. *J. Am. Chem. Soc.*, **1965**, *87*, 25.

16. Turner, J. J.; Pimentel, G. C. *Science*, **1963**, *140*, 974.

17. MacKenzie, D. R. *Science*, **1963**, *141*, 1171.

18. MacKenzie, D. R.; Fajer, J. *Inorg. Chem.*, **1966**, *5*, 699.

19. Bougon, R.; Lance, M; *C. R. Acad. Sci. Paris*; **1983**; *297*; 117.

20. Šmalc, A.; Lutar, K.; Žemva, B. *Inorg. Synth.*; **1992**; *29*, 11.

21. Bezmel'nitsyn, V. N.; Legasov, V. A.; Chaivanov, B. B. *Proc. Acad. Sci. USSR (Engl. Trans.)* **1977**; *235*, 365; *Dokl. Akad. Nauk SSSR.*; **1977**; *235*; 96.

22. Asprey, L.B. *J. Fluorine Chem.*, **1976**, *7*, 359.

23. Makeev, G. H.; Cynanskii, B. F.; Smirnov, V. M.; *Proc. Acad. Sci. USSR (Engl. Trans.)* **1975**; *222*; 452; *Dokl. Akad. Nauk SSSR*; **1975**; *222*; 151.

24. Žemva, B., *Personal Communication*, see also ref. 20.

25. Falconer, W.E.; Morton, J.R.; Streng, A.G. *J. Chem. Phys.*; **1964**, *41*, 902.

26. Artyukhov, A. A.; Legasov, V. A.; Makeev, G. N.; Smirnov, B. B.; Chaivanov, B. B.; *High Energ. Chem. (Engl. Trans.)* **1976**, *10*; 450; *Khim. Vysok. Énerg.*; **1976**; *10*; 512.

27. "JANAF Thermochemical Tables"; *Natl. Bur. Stand. (US) Circ.* **1970**, No. 37, 2nd ed.

28. Nielsen, J.B.; Kinkead, S.A.; *Inorg. Chem.*, **1990**, *29*, 1779.

LIST OF FIGURES.

Figure 1a. Small Photochemical Immersion Well for Low-Temperature KrF_2 Synthesis. The immersion well and reaction chamber are of quartz; the lamp well is of Quartz, Vycor™, or Pyrex™, as desired. The lamp well is sized for a 450 watt or smaller medium pressure UV lamp (37 mm O.D.)

Figure 1b. Photochemical Reactor for 550- and 1200 Watt Medium Pressure UV Lamps. Material is all Pyrex™.

Figure 1c. Section of Vacuum Line for Purification of KrF_2 Product from Photochemical Synthesis.

Figure 2. UV-visible spectrum of KrF_2. In addition to the corrected and uncorrected (for thermal decomposition) data, the earlier reported data is shown.

Figure 3. Variation of KrF_2 yield (in grams/hour) with mole fraction krypton. Total quantity of reactants are constant at 0.25 moles. The data are fitted to the following polynomial:

$$KrF_2 \text{ yield (g/hr)} = -15.81664 \cdot \chi_{Kr}^4 + 23.90729 \cdot \chi_{Kr}^3 + -11.03569 \cdot \chi_{Kr}^2 + 2.466380 \cdot \chi_{Kr} + -0.2180971$$

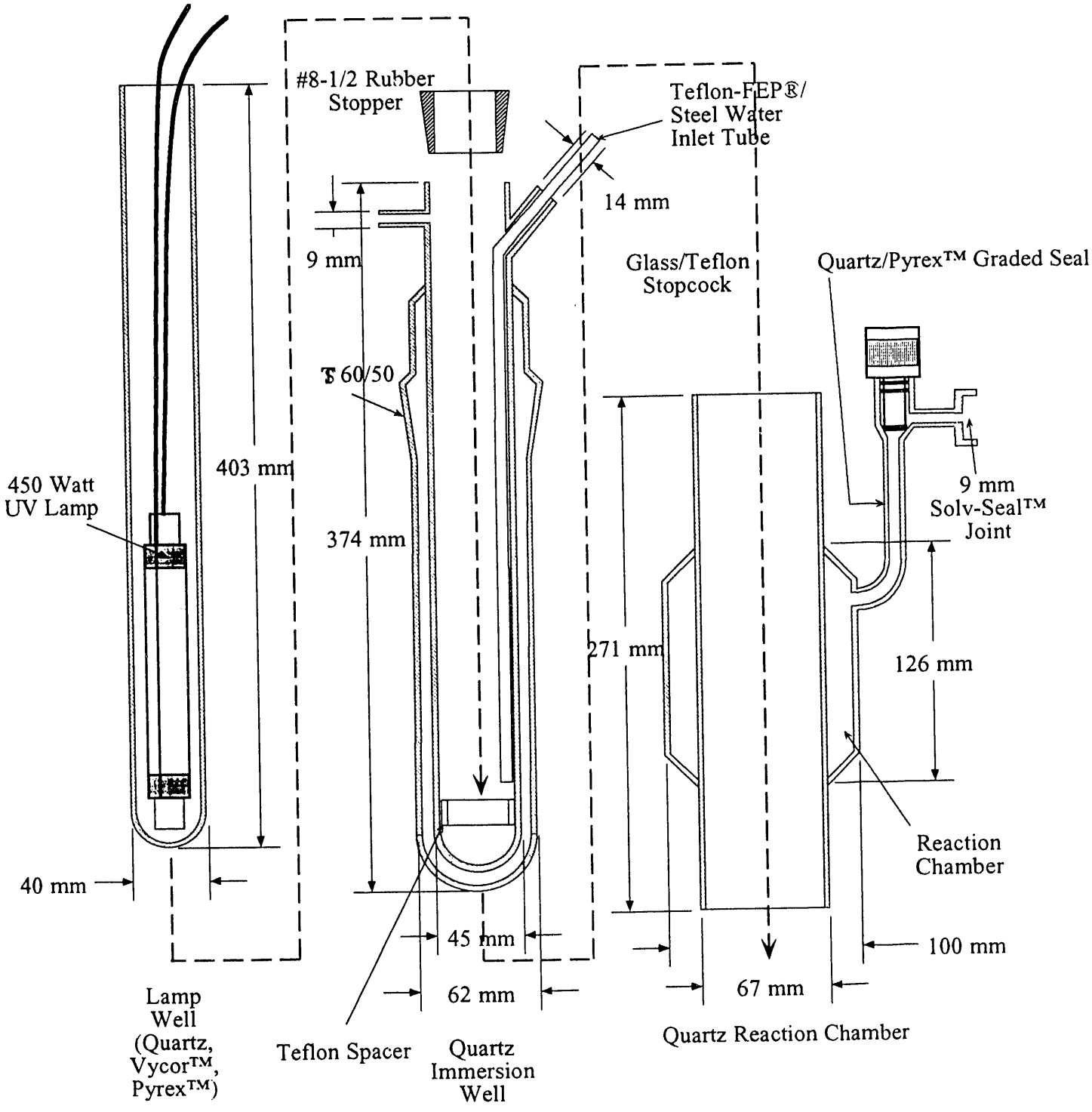
#8-1/2 Rubber Stopper
Teflon-FEP®/ Steel Water Inlet Tube
14 mm
9 mm
Glass/Teflon Stopcock
Quartz/Pyrex™ Graded Seal
T 60/50
403 mm
450 Watt UV Lamp
374 mm
9 mm Solv-Seal™ Joint
271 mm
126 mm
Reaction Chamber
40 mm
45 mm
100 mm
62 mm
67 mm
Lamp Well (Quartz, Vycor™, Pyrex™)
Teflon Spacer
Quartz Immersion Well
Quartz Reaction Chamber

Figure 1a.

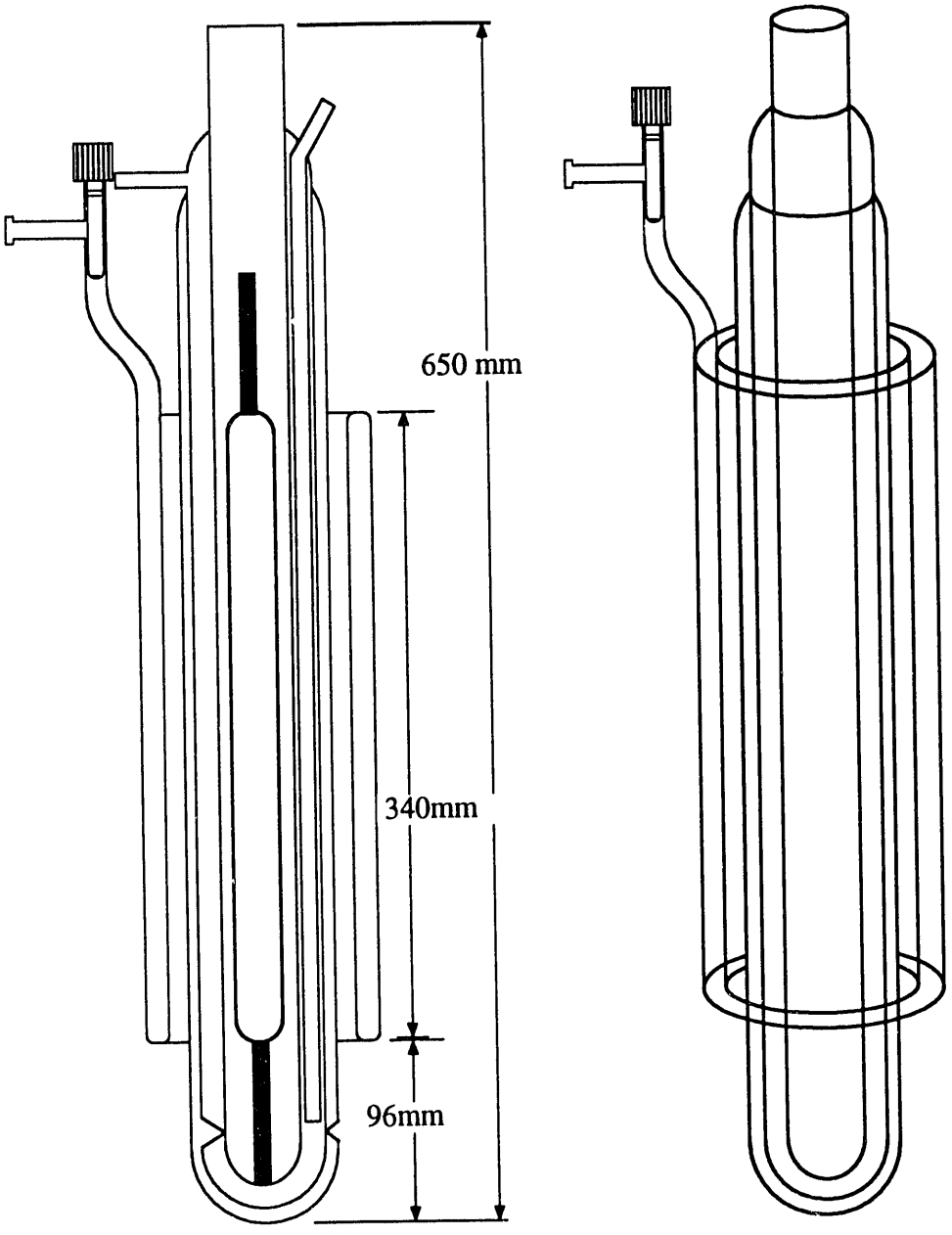

Figure 1b

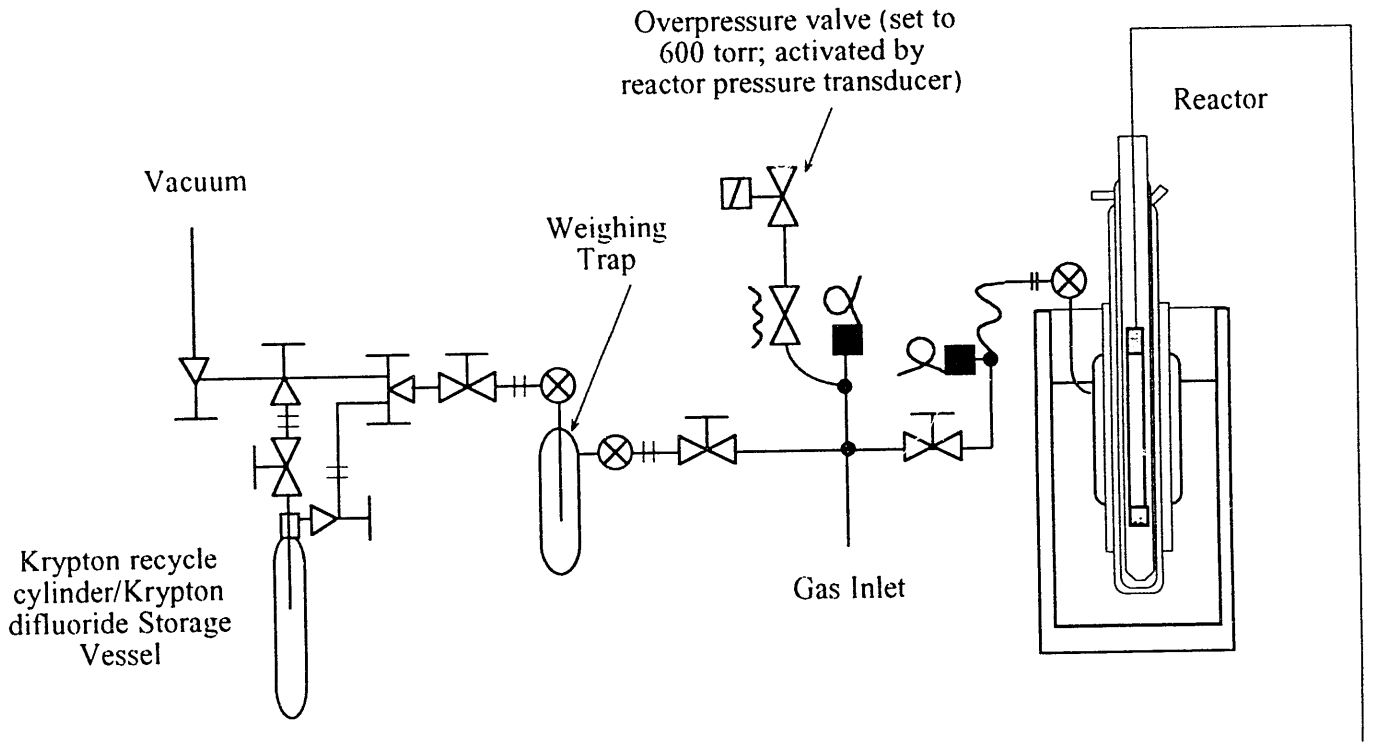

Figure 1c. KrF_2 Purification Line

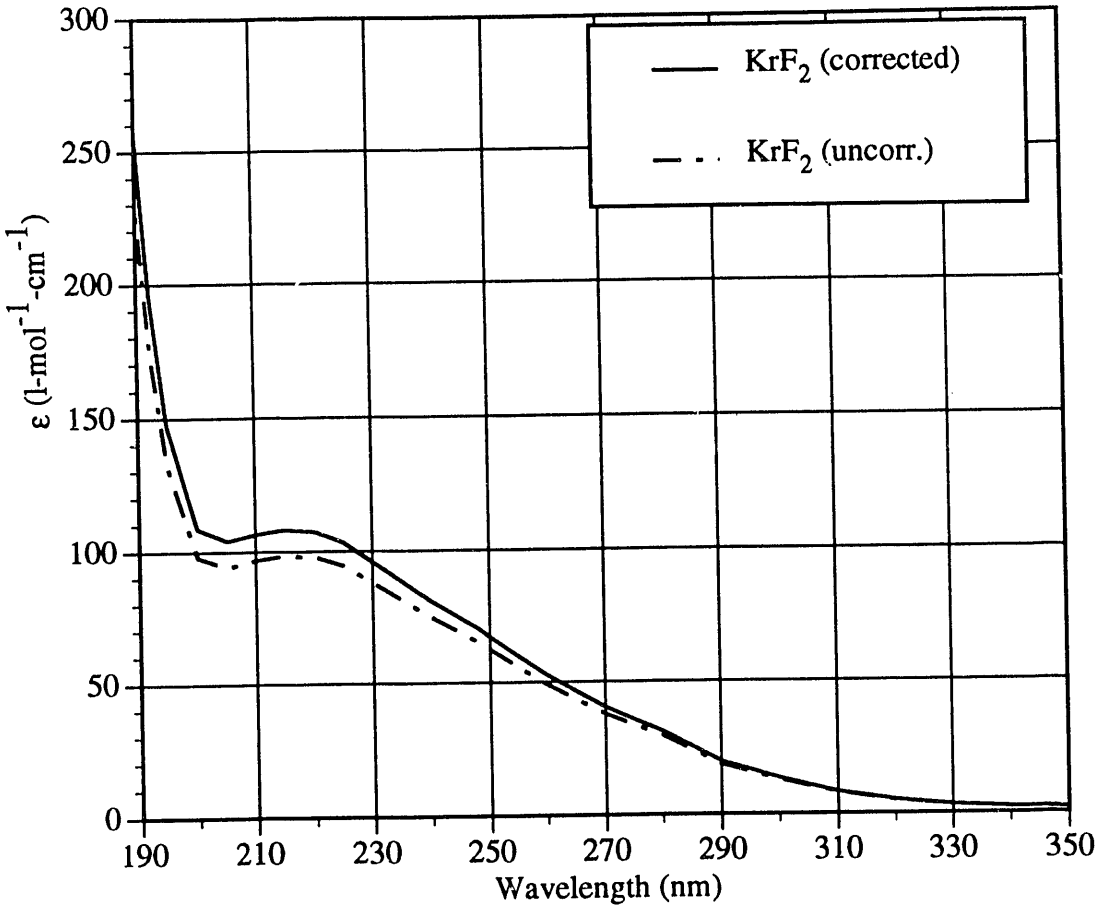

Figure 2. UV-visible Spectra of KrF_2

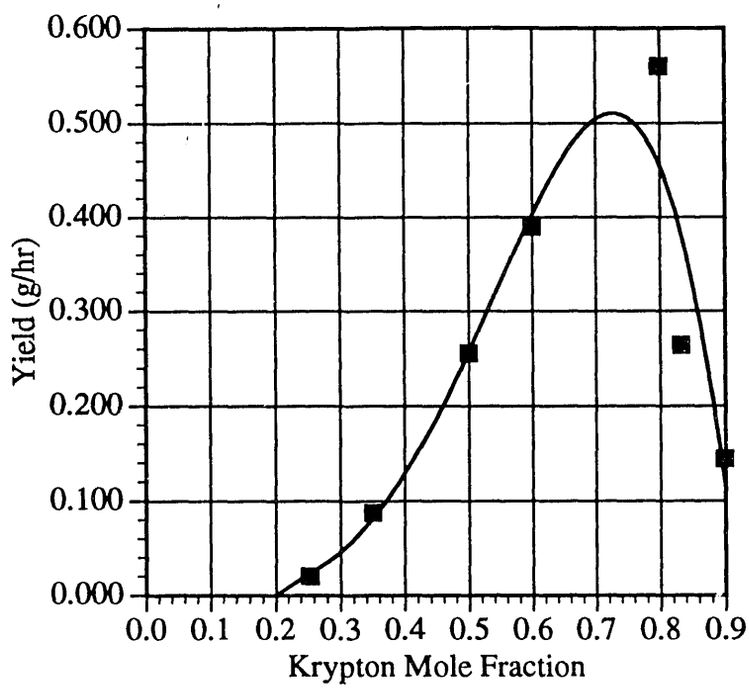

Figure 3. Variation of KrF_2 Yield with Krypton Mole Ratio

DATE
FILMED
11/29/93

END