2

Conf-9311102--2

UCRL-JC-115214
PREPRINT

Fabrication of the Attachment Rails Used for Mounting an Array of Eight X-ray Reflection Gratings

Richard C. Montesanti
Pete J. Davis
Lawrence Livermore National Laboratory
Livermore, California

This paper was prepared for submittal to the
American Society for Precision Engineering Conference
Seattle, Washington, November 7-12, 1993

November 1993

Lawrence Livermore National Laboratory

This is a preprint of a paper intended for publication in a journal or proceedings. Since changes may be made before publication, this preprint is made available with the understanding that it will not be cited or reproduced without the permission of the author.

MASTER

DISTRIBUTION OF THIS DOCUMENT IS UNLIMITED

DISCLAIMER

This document was prepared as an account of work sponsored by an agency of the United States Government. Neither the United States Government nor the University of California nor any of their employees, makes any warranty, express or implied, or assumes any legal liability or responsibility for the accuracy, completeness, or usefulness of any information, apparatus, product, or process disclosed, or represents that its use would not infringe privately owned rights. Reference herein to any specific commercial products, process, or service by trade name, trademark, manufacturer, or otherwise, does not necessarily constitute or imply its endorsement, recommendation, or favoring by the United States Government or the University of California. The views and opinions of authors expressed herein do not necessarily state or reflect those of the United States Government or the University of California, and shall not be used for advertising or product endorsement purposes.

DISCLAIMER

Portions of this document may be illegible in electronic image products. Images are produced from the best available original document.

Fabrication of the Attachment Rails Used for Mounting an Array of Eight X-ray Reflection Gratings

Richard C. Montesanti and Pete J. Davis
Lawrence Livermore National Laboratory (LLNL)
Livermore, CA 94550

Key Words: X-ray Multi-Mirror project (XMM), diamond-turning, snap-together optics, CBN machine, Large Optics Diamond Turning Machine (LODTM), error budget

Introduction

This paper describes the fabrication of a set of four attachment rails—parts that resemble precision step gauges. The attachment rails provide the precision mounting surfaces for a prototype array of eight X-ray reflection gratings for the European Space Agency's (ESA) X-ray Multi-Mirror project (XMM). Each rail is 4.5" long with a cross-section of less than 0.1 in^2, and has eight protruding bosses spaced approximately 0.5" apart (Figure 1). A diamond-turned feature on each boss provides a mounting surface for one of the four corners of a grating. These surfaces are 0.018" high by 0.1" wide, and have a 12" cylindrical radius with an axis parallel to the boss protrusion (Figure 2). Together, the four rails provide eight sets of four co-planar points for mounting the gratings (Figure 3). Note that the gratings are not parallel to each other; they sweep through a 12 mrad angle from the first to eighth grating. To accommodate this fanned array, the normal directions (denoted by arrows in Figure 1) of the mounting surfaces on the bosses, at the rail centerline, also sweep through a 12 mrad angle from the first to eighth boss.

The optical performance requirements of the grating array required that the mounting points locate the corners of the gratings within ± 15 µin of their designed positions. By virtue of the accurate location of the mounting surfaces with respect to each other, the rails allow the gratings to be arrayed with the spacing and orientation accuracy necessary in a snap-together optics fashion; adjustments after installing the gratings are not required.

The base material of the rails is Ni-Fe Alloy 42 (invar), which has the same coefficient of thermal expansion as the gratings and the support structure (2.4 µin/in-°F). The bosses were plated with 0.005" of copper to allow single-point diamond-turning of the grating mounting surfaces with minimal tool wear.

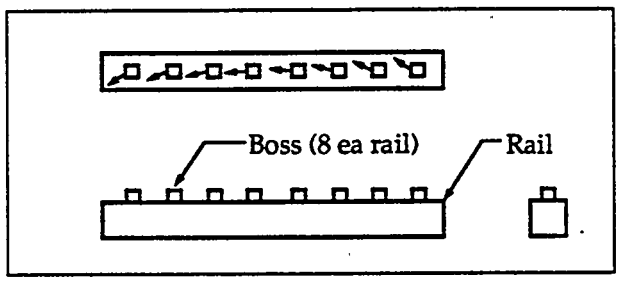

Figure 1. Rail with eight bosses.

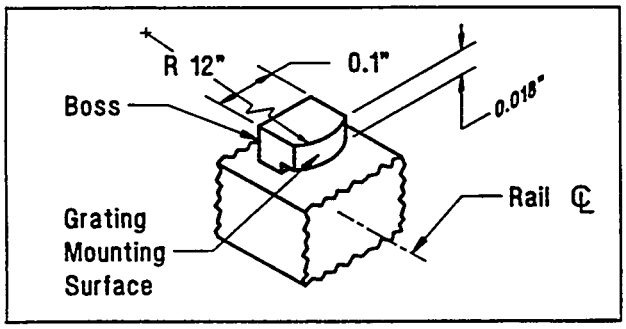

Figure 2. Boss detail.

RECEIVED
SEP 20 1993
OSTI

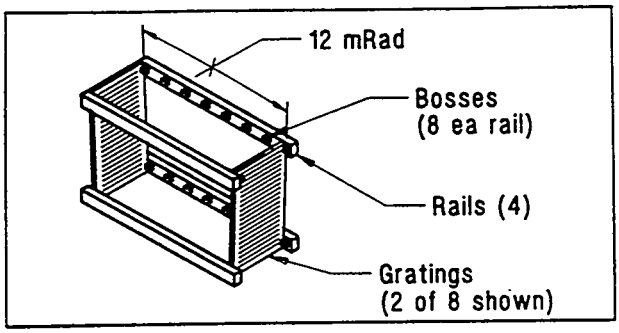

Figure 3. Gratings mounted to rails.

Preliminary Machining

Our first attempt was to use strips from a piece of 0.5" thick cold-worked invar plate. Due to the high length-to-thickness ratio of the rails (18:1), and the residual stresses in the cold-worked material, it proved difficult to machine the rails to the 0.0002" flatness accuracy required for the parts. Our solution was to use a wire electric discharge machine (EDM) to cut the longitudinal profile of each rail from the core of a piece of 1" diameter rough-forged round bar stock, and to modify the annealing heat treatment for the material. The profile of each boss was cut using the wire EDM machine, and then the two rail mounting surfaces were free-abrasive lapped to within 0.0002" flatness and perpendicularity to each other.

Diamond-Turning the Bosses

The geometry of the eight cylindrical grating mounting surfaces on a rail was suitable for plunge-cutting with a flycutter on a 2-axis lathe. The CBN machine at LLNL, a modified Excello model 920 T-base diamond-turning machine, had the correct geometry and slide travel capacities for flycutting these surfaces. Figure 4 is a schematic of the flycutting set-up. A spindle mounted on a slide that travels parallel to the spindle centerline (z-axis) carried a single-point diamond tool set at a 12" swing radius to form the flycutter. A cross-slide that travels perpendicular to the spindle centerline (x-axis) carried the rail. The rail was mounted on a custom built angle plate that used an angle measuring interferometer for precisely measuring the angle of the rail in the xy-plane of the CBN machine. This allowed the bosses to be flycut so that the normal direction of the mounting surfaces on the bosses, at the rail centerline, could be made to sweep through the necessary 12 mrad angle from the first to eight boss (Figure 5). By indexing the x-axis relative to the spindle centerline, each boss was precisely positioned so that the flycutter could be plunged into the workpiece to form the 12" cylindrical radius feature on the boss.

The CBN machine uses laser interferometers operating in evacuated beam paths for displacement measurements of the x- and z-axis slides. Abbe off-set errors in indexing the rail relative to the spindle centerline were avoided by mounting the rail in-line with the x-axis measurement path. The spindle uses a hydrostatic bearing that has temperature controlled cooling water to stabilize its thermal growth. Thermally induced dimensional changes in the machine and fixtures are minimized by controlling the temperature of the surrounding air to within ±0.25 °F.

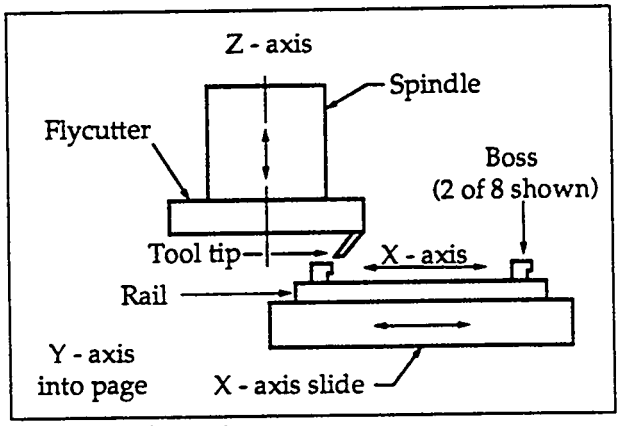

Figure 4. Flycutting set-up.

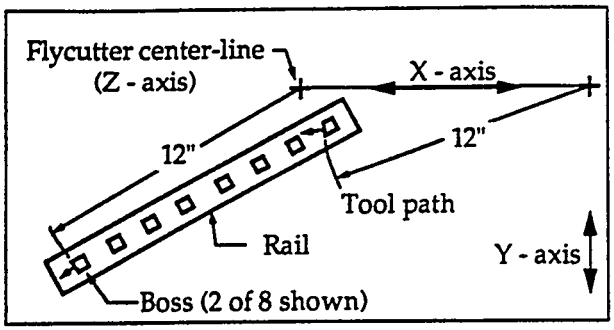

Figure 5. Flycutter tool path and rail set-up.

Qualifying the CBN Machine

To qualify the CBN machine for diamond-turning the rails, a static drift check and a dynamic (machining) test were performed. A static drift test was used to ensure that the machine's laser interferometers, positioning servos, and thermal control were adequate for achieving positioning accuracy on the order of 5 µin. Both the x- and z-axis slides were activated and commanded to maintain a static position. Since the positioning accuracy of the x-axis slide was critical for machining the rails, a linear variable differential transformer (LVDT) was set up to measure displacements in the x-direction of the x-axis slide relative to the z-axis slide. Drift of the x-axis slide over 30 minutes was less than 2 µin, with a noise level (AC component) of less than 1 µin. These results were promising, since the time to sequentially perform the final cuts on all eight bosses on a rail was estimated to be 20 minutes. To further qualify the CBN machine, a qualification part was diamond-turned on it. A circular disc with four radial rows having ten bosses each (forming ten concentric rings) was mounted on the spindle. The disk was made of Ni-Fe Alloy 42, and the bosses were plated with 0.005" of copper. A single-point diamond tool was mounted to the x-axis slide. Although this arrangement was the opposite of the flycutting set-up intended for the rails, it allowed us to investigate the positioning accuracy of the x-axis slide while the machine was operating in a dynamic cutting mode. The Large Optics Diamond Turning Machine (LODTM) at LLNL was used as a measuring machine to inspect the location accuracy of the diamond turned surfaces on the qualification part[a]. Inspection of the four radial rows of bosses on the part indicated that the positioning error of the CBN machine was within ± 8.7 µin, which met the ± 9.3 µin allowed by our error budget. The qualification part also proved that tool wear due to interrupted cuts would not be an issue for flycutting the eight bosses on a rail.

Error Budget

The error budget for the fabrication and inspection of the boss locations divided the ± 15 µin limit on the location error of each boss (e_{total}) among the following error sources: positioning uncertainty of the diamond turning machine (e_D); uncertainty of the angle between the rail center-line and the xz-plane (e_θ); uncertainty of the flycutter radius (e_R); difference in ambient temperature[b] during the fabrication of one rail compared to the others (e_T); and the uncertainty of the inspection process for measuring the dimensional accuracy of the finished rails (e_I). After measuring e_D and e_T, reasonable values were assigned for e_θ and e_R, and a maximum permissible value for e_I was calculated. Table 1 shows the sensitivity of the boss location to each of the error sources, and how the ± 15 µin was allocated among the error sources. Realizing that the worse case algebraic addition of the errors was probably too conservative, and the root of the sum of the squares (RSS) was probably too optimistic, the average values of the algebraic and RSS allowable errors for each source was used.

---

[a] The measurement repeatability of LODTM was measured to be within 0.2 µin.

[b] A small (≈ 10 µin/in) consistent scaling up or down of the boss spacing for all four rails would not degrade the optical performance of the grating array.

Inspection results[c]

Table 2 shows the measured location errors of the grating mounting surfaces on the four rails. The errors for all four rails were within ± 11 µin. The error span for the first three rails indicated that a progressive degradation in the diamond-turning process was occurring. We suspected that the diamond tool was beginning to exhibit appreciable wear, so it was replaced with a new tool before machining the fourth rail. The ± 3.1 µin span on the boss locations for the fourth rail verified those suspicions.

At the time of this writing, preliminary optical tests using a Fizeau interferometer and a precision rotary table indicated that the as-mounted orientations of the eight gratings mounted against the bosses of the four rails (EOBB array) were better than what was predicted for the case where the corners of each grating had a ± 15 µin location error. The final proof of the accuracy of the boss locations will occur in October 1993, when the X-ray performance of the EOBB array will be tested in Europe.

[c] See companion paper: *Inspection of the Diamond-Turned Surfaces Used for Mounting an Array of Eight X-ray Reflection Gratings*, R.C. Montesanti, ASPE 1993 Annual Meeting Proceedings.

Conclusion

The CBN machine—a T-base diamond-turning machine at LLNL—was successfully used in a flycutting set-up to single-point diamond-turn the grating mounting surfaces of the four attachment rails used for mounting eight X-ray reflection gratings into an array. Each rail has eight grating mounting surfaces that were machined to a position accuracy of ± 11 µin or better, meeting the required ± 15 µin tolerance for the parts.

Acknowledgments

Special appreciation goes to Todd Decker, Bob Donaldson, Paul Geraghty, Layton Hale, Maggie Jong, Steve Little, and Greg Wilkinson, all of LLNL.

	Algebraic addition		Root-Sum-Squares		Ave of RSS & Algebraic Allow errors
Error source	Allowable error	Contribution to e_{total}	Allowable error	Contribution to e_{total}	
e_θ	± 3 arc-sec	± 1.0 µin	± 3 arc-sec	± 1.0 µin	± 3 arc-sec
e_R	± 0.002"	± 1.5 µin	± 0.002"	± 1.5 µin	± 0.002"
e_T	± 0.25 °F	± 2.0 µin	± 0.25 °F	± 2.0 µin	± 0.25 °F
e_D	± 6.3 µin	± 6.3 µin	± 12.3 µin	± 12.3 µin	± 9.3 µin
e_I	± 4.2 µin	± 4.2 µin	± 8.2 µin	± 8.2 µin	± 6.2 µin
e_{total}	—	± 15 µin	—	± 15 µin	—

Table 1. Error budget for the fabrication and inspection of the boss locations.

	Boss 1	Boss 2	Boss 3	Boss 4	Boss 5	Boss 6	Boss 7	Boss 8	Span
Rail 1	+ 4.0	+ 4.8	+ 1.2	- 2.5	- 2.7	- 4.8	- 1.0	- 1.2	± 4.8
Rail 2	- 4.9	- 7.8	- 7.1	- 3.0	+ 5.7	+ 7.8	+ 1.9	- 2.9	± 7.8
Rail 3	- 11.0	- 6.7	- 3.9	+ 4.9	+ 11.0	- 2.5	- 2.6	- 1.3	± 11.0
Rail 4	- 0.6	+ 3.1	- 0.2	- 1.5	- 1.7	- 1.0	+ 0.7	- 3.1	± 3.1

Table 2. Location errors of the grating mounting surfaces (µin).

This work was performed under the auspices of the U.S. Department of Energy by Lawrence Livermore National Laboratory under contract No. W-7405-Eng-48.