LBL-32150

DESIGN OF HIGH-T_c SUPERCONDUCTING BOLOMETERS FOR A FAR INFRARED IMAGING ARRAY

S. Verghese and P. L. Richards
Department of Physics, University of California and
Materials Sciences Division, Lawrence Berkeley Laboratory,
Berkeley, CA 94720.

LBL--32150

DE93 002564

D. K. Fork
Xerox Palo Alto Research Center, Palo Alto, CA 94304

K. Char
Conductus Inc., Sunnyvale CA 94086.

T. H. Geballe
Department of Applied Physics, Stanford University, Stanford, CA 94305.

Abstract–The design of high-T_c superconducting bolometers for use in a far infrared imaging array from wavelengths $30 - 100\,\mu$m is discussed. Measurements of the voltage noise in thin films of $YBa_2Cu_3O_{7-\delta}$ on yttria-stabilized zirconia buffer layers on silicon substrates are used to make performance estimates. Useful opportunities exist for imaging and spectroscopy with bolometer arrays made on micro-machined silicon membranes. A circuit on each pixel which performs some signal integration can improve the sensitivity of large two-dimensional arrays of bolometers which use multiplexed readout amplifiers.

I. INTRODUCTION

Recently, much work has focused on the high-T_c superconducting bolometer as an infrared detector [1]–[5]. Such bolometers consist of an infrared radiation absorber thermally coupled to a high-T_c superconducting thermometer operated at its resistive transition, both weakly coupled to a liquid-nitrogen-cooled heat sink at 77K. In this paper, we only consider relatively sensitive slow composite bolometers which are constructed on thin substrates that are thermally isolated from the heat sink. We will not consider the fast bolometers obtained when a high-T_c film is deposited directly on a bulk substrate [6] or the antenna-coupled microbolometer [7].

For wavelengths $\lambda < 20\,\mu$m, photovoltaic infrared detectors such as HgCdTe give excellent performance at 77K. For wavelengths $\lambda > 20\,\mu$m the sensitivity of semiconducting detectors at or above 77K is poor and room-temperature thermal detectors such as the pyroelectric detector, the thermopile, or the Golay cell are used in applications where a liquid-nitrogen-cooled high-T_c bolometer could be conveniently used. The high-T_c bolometer offers higher sensitivity under these conditions, primarily because of its lower operating temperature and the sensitivity with which small changes in the temperature of the bolometer can be detected. Applications for composite high-T_c bolometers exist in far-infrared laboratory spectroscopy and space observations of bright sources such as planets [3] using radiatively cooled systems or systems cooled with a single stage Stirling cycle refrigerator.

Some of the authors have recently built composite high-T_c bolometers cooled by liquid nitrogen with $D^* = 1 - 4 \times 10^9 \mathrm{cm\,Hz^{1/2}W^{-1}}$ for wavelengths $20 - 300\,\mu$m [4, 5]. The areas of these bolometers were chosen from 1 to 10 mm^2 to match the throughput of laboratory Fourier transform spectrometers. For such large areas, there are stringent requirements on thermometer sensitivity which require the use of high quality epitaxial c-axis $YBa_2Cu_3O_{7-\delta}$ (YBCO) films on favorable substrates with sharp resistive transitions and low voltage noise under current bias. Arrays of much smaller bolometers are potentially useful for thermal imaging. The absorbing area A can be as small as the diffraction limit $A = \lambda^2/\Omega$, where Ω is the solid angle of the pixel's field of view. The lower heat capacity of such small bolometers relaxes the requirement on thermometer sensitivity. The possibility then exists that YBCO on amorphous substrates like silicon nitride (Si_3N_4) membranes could be used at wavelengths near $\sim 10\,\mu$m [8, 9].

In this paper, we consider an intermediate case of micro-machined bolometers on silicon membranes which are potentially useful for imaging from wavelengths $30 - 100\,\mu$m. Measurements of electrical noise in YBCO thermometers on silicon substrates are used to predict the sensitivity of an imaging array of silicon bolometers. We analyze the thermal geometry and propose to use the same YBCO film as both the thermometer and the radiation absorber. We also discuss a scheme for reading out two dimensional bolometer arrays which performs signal integration on the chip.

This work was supported in part by the Director, Office of Energy Research, Office of Basic Energy Sciences, Materials Sciences Division of the U.S. Department of Energy under Contract No. DE-AC03-76SF00098 (for SV, PLR), by Conductus Inc. (for KC), by the Air Force Office of Scientific Research (AFOSR) under Contract No. F49620-89-C-0017 (for DKF, THG), and by Xerox Palo Alto Research Center (for DKF). Manuscript received August 24, 1992.

MASTER

DISTRIBUTION OF THIS DOCUMENT IS UNLIMITED

Table I. Characteristics of YBCO films measured for use as thermometers on high T_c bolometers.

Sample	Source	Geometry	$\left(\frac{1}{R}\frac{dR}{dT}\right)^{-1}$ (K)	$S_v^{1/2}/IR$ ($Hz^{-1/2}$)	NET (K $Hz^{-1/2}$)	ρ_{DC} ($\mu\Omega$cm) at midpoint
A	Conductus	1 x 1 mm^2 300 nm YBCO/20 nm $SrTiO_3/Al_2O_3$	1	$3\cdot10^{-8}$	$3\cdot10^{-8}$	37
B	Xerox	1 x 3 mm^2 40 nm YBCO/50 nm YSZ/Si	2.6	$3\cdot10^{-8}$	$8\cdot10^{-8}$	55
C	Conductus	3 x 3 mm^2 300 nm YBCO/20 nm YSZ/Si_3N_4	6	$4\cdot10^{-7}$	$2.4\cdot10^{-6}$	270
D	Xerox	1 x 3 mm^2 40 nm YBCO/50 nm YSZ/Si_3N_4	5	10^{-6}	$5\cdot10^{-6}$	190

II. THEORY

The minimum heat capacity C of a practical bolometer is limited by materials considerations such as practical substrate thickness. The minimum thermal conductance G to the heat sink is limited by the background power loading and by the required response time $\tau = C/G$. The responsivity of a bolometer operated at temperature T on the resistive transition $R(T)$ is

$$S(\omega) = I\frac{dR(T)}{dT}\,|G + i\omega C|^{-1}\ , \qquad (1)$$

where I is the bias current and ω is the angular frequency of the modulated light [1]. We neglect the effects of positive thermal feedback from the bias current which reduce the thermal conductance to an effective value $G - I^2 dR/dT$. To maintain thermal stability, we constrain the current by the condition $I^2 dR/dT \leq 0.3G$.

The noise equivalent power (NEP)—the smallest detectable signal in a 1 Hz noise bandwidth—is calculated by summing the important sources of incoherent noise in quadrature.

$$\mathrm{NEP} = \left(4kT_c^2 G + \frac{4kT_c R}{|S|^2} + \frac{e_n^2 + (i_n R)^2}{|S|^2} + \frac{S_v(\omega)}{|S|^2}\right)^{1/2}. \qquad (2)$$

Ideally, the dominant contributions of an optimized bolometer are the first and second terms, which are thermal fluctuation noise and Johnson noise respectively. The third term, amplifier noise, should be negligible in a well engineered bolometer. In practice, the fourth term, voltage noise in the film, is the largest contributor to the NEP in many of our bolometers. We characterize noise in the thermometer by the noise equivalent temperature (NET)—the smallest detectable temperature change in a 1 Hz noise bandwidth. The NET $= S_v^{1/2}(\omega)\,(IdR/dT)^{-1}$, where $S_v(\omega)$ is the spectral density of voltage fluctuations in the high-T_c film. Phenomena such as thermopower, Bi film resistance, gas expansion, and dielectric constant changes have been used as thermometers for thermal far-infrared detectors operating above 77K [10]–[13]. For applications with frequencies less than 100 Hz, the best NET of these technologies is in the range of 10^{-6} K/$Hz^{1/2}$. If these thermometer technologies are restricted to thin films useful for large micromachined arrays, such as bismuth films, then NET $> 10^{-5}$ K/$Hz^{1/2}$. High-T_c thin film thermometers promise values of NET $< 10^{-8}$ K/$Hz^{1/2}$, and hence orders of magnitude increase in detector sensitivity. A figure of merit which is related to the NEP—the specific detectivity $D^* = A^{1/2}/\mathrm{NEP}$, where A is the detector area—is convenient for comparing the sensivitity of detectors with different areas.

III. YBCO THERMOMETER PROPERTIES

Fabrication of useful high-T_c composite bolometers requires films on very thin substrates to minimize heat capacity. We investigated YBCO films on sapphire, silicon, and silicon nitride substrates all of which are strong enough to be made thin. Details concerning the fabrication and measurement of these samples have been reported elsewhere [8]. Table I summarizes the properties of four YBCO films which were deposited by laser ablation at Conductus and Xerox. These are representative of the best performance that has been obtained to date.

Samples A and B were epitaxial c-axis films deposited on crystalline substrates with buffer layers. The noise measured at 10 Hz on the steepest part of the resistive transition for Sample A (YBCO/$SrTiO_3/Al_2O_3$) gave NET $= 3 \times 10^{-8}$ K/$Hz^{1/2}$. This sample was as quiet as the best YBCO films that we have measured to date on any substrate. Sample B was deposited on a silicon substrate using a process specifically developed to provide a pristine Si surface for epitaxial growth [15]. The best NET at 10 Hz yet obtained for YBCO on a silicon substrate is NET $= 7 \times 10^{-8}$K/$Hz^{1/2}$. Samples C and D were mostly c-axis YBCO deposited on amorphous Si_3N_4 films with YSZ buffer layers. Their values of NET at 10

Hz are about 100 times poorer than for samples A and B. In general, we expect that YBCO films with poor epitaxy make noisier thermometers.

Films that satisfy other standard requirements for quality (e.g. large J_c, narrow resistive transition) consistently show low noise before processing. Samples A and B had high critical current ($J_c > 10^6 \mathrm{A/cm^2}$, $T = 77\mathrm{K}$) and, as shown in Table I, narrow resistive transitions, and low voltage noise. Processing, especially in the form of narrow, patterned lines, has been observed to increase noise. We have avoided extensive processing of the films after deposition by using large area YBCO thermometers with the minimum resistance necessary to couple adequately to the readout amplifier. This approach also minimizes film volume dependent mechanisms for 1/f noise.

IV. BOLOMETER DESIGN

For practical reasons, bolometers for use in large format imaging arrays must be produced by optical lithography and micromachining. Silicon and Si_3N_4 are well suited to such fabrication techniques. Yttria-stabilized zirconia is another candidate membrane material. It is compatible with high quality YBCO thermometers, has low thermal conductivity, and can be etched into free-standing membranes [19]. In this section we discuss the thermal properties of a silicon membrane bolometer pixel, estimate its sensitivity, and consider using the YBCO thermometer as the infrared absorber.

For a given optical system, the area of a pixel which couples optically to N spatial modes is proportional to the wavelength squared

$$A = \lambda^2 N/\Omega, \tag{3}$$

where Ω is the solid angle of the field of view of the pixel. Many considerations enter the choice of the constant of proportionality N/Ω. The goal of this design is an imaging array with f/6 optics ($\Omega = 0.02\,\mathrm{sr}$) which has useful sensitivity for wavelengths $30 - 100\,\mu\mathrm{m}$ and is diffraction-limited ($N = 1$) at $\lambda = 100\,\mu\mathrm{m}$. From (3), the pixel size is $0.7 \times 0.7\,\mathrm{mm}$. Using handbook values [20], we estimate the heat capacity for a $0.5\,\mu\mathrm{m}$ thick Si membrane to be $C = 1.5 \times 10^{-7}\,\mathrm{J/K}$. For a thermal conductance $G = 5 \times 10^{-5}\,\mathrm{W/K}$, the thermal response time is $\tau = C/G = 3\,\mathrm{ms}$. Such a thermal conductance can be achieved with two $1000 \times 90 \times 0.5\,\mu\mathrm{m}$ legs of Si which support the membrane. Figure 1 is a diagram of such a bolometer with the width of the Si legs exaggerated for clarity. From (2), the limit to the NEP from thermal fluctuations for this bolometer is $\mathrm{NEP} = 3 \times 10^{-12}\,\mathrm{W/Hz^{1/2}}$. If sample B from Table I were used as the thermometer, then $\mathrm{NEP} = 5 \times 10^{-12}\,\mathrm{W/Hz^{1/2}}$ which corresponds to $D^* = 1.4 \times 10^{10}\,\mathrm{cmHz^{1/2}W^{-1}}$. This detectivity is significantly better than the $D^* = 2 \times 10^9\,\mathrm{cmHz^{1/2}W^{-1}}$ of the best Schwartz-type thermopiles used in this wavelength range [3].

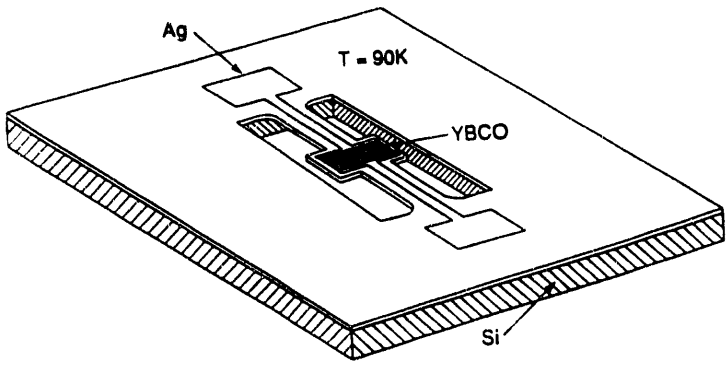

Figure 1. Diagram of a membrane bolometer. The bolometer consists of a YBCO film which functions as the radiation absorber and as the thermometer. The silicon membrane is isolated from the heat sink by two thin legs. Radiation is incident on the Si membrane from the back side.

We have fabricated $0.5\,\mu\mathrm{m}$ thick Si membranes which are supported by two $1000 \times 100 \times 0.5\,\mu\mathrm{m}$ legs. The membrane was defined with an etch-stop layer produced by selective ion implantation of 180 keV BF_2^+ at a dose of $10^{16}\,\mathrm{cm^{-2}}$. After a 60s anneal at 1000°C, the Si samples were etched in a solution of 80°C KOH. There are some disadvantages to the boron etch stop. The boron concentration results in a degenerately doped Si membrane which is under tensile stress and may be difficult to fabricate reproducibly to the dimensions needed for sensitive high-T_c bolometers. Also, a degenerately doped Si membrane has a high infrared conductivity which renders resistive infrared absorbers ineffective [14]. We are presently investigating an electrochemical etch-stop which uses a reverse-biased $p - n$ junction to slow the Si etch rate in KOH [16]. This technique requires much lower ion implantation doses of $\sim 10^{12}\,\mathrm{cm^{-2}}$.

In earlier work on sapphire composite bolometers, some of the authors used a gold black absorber for wavelengths from $0.5 - 50\,\mu\mathrm{m}$ and a resistive bismuth film from $50 - 1000\,\mu\mathrm{m}$ [5]. A 30 nm Bi film deposited on the back of the Si bolometer would have a surface resistance $R_s \approx 150\Omega$ and could absorb $\sim 50\%$ of the radiation incident through the Si substrate [14]. Such a metal film must be much thinner than the wavelength and must have a quasiparticle scattering rate which is higher in frequency than the photons to be absorbed. An alternative scheme is to use a YBCO film on the front of the bolometer as both the thermometer and the absorber of infrared radiation incident from the back. Data on the infrared conductivity [17] of a 48 nm thick YBCO film about T_c suggest that a 20 nm thick YBCO film would

have $R_s \approx 150 - 120\Omega$ for wavelengths of $30 - 100\,\mu m$ respectively. This corresponds to an absorption efficiency of 53% – 45% for radiation at normal incidence. Since the mean free path at 100K is ~ 16 nm, surface scattering in films thinner than 200 nm may increase the scattering rate and make a YBCO absorber useful for shorter wavelengths as well [18]. Such a scheme could also reduce the thermometer noise since the volume of the film would be large and a DC resistance $> 100\Omega$ is required for adequate coupling to a readout amplifier.

V. ARRAY DESIGN AND READOUT

We have predicted useful sensitivity for a single pixel high-T_c bolometer with a dedicated low-frequency amplifier. Many imaging applications require large arrays of bolometers where constraints on power dissipation and filling fraction only allow for a few multiplexed amplifier channels which integrate the signal from each pixel for a fraction of the total observation time of a frame.

The NEP of a bolometer pixel has contributions from infrared source fluctuations—such as those which arise from fluctuations in emission from the atmosphere—as well as the thermal fluctuation noise, represented by the first term in (2). It also has contributions from voltage fluctuations in the thermometer, represented by the second and fourth terms in (2). Thermal fluctuations occurring for $\omega_{fluct}\tau \gg 1$ are integrated by the thermal response time of the bolometer. Therefore, a bolometer which operates in the source noise or phonon noise limit with τ equal to the frame time does not require additional electrical integration. Most high-T_c bolometers as well as the bolometer design that we have described above are limited by voltage noise fluctuations. Therefore, integration of the electrical signal is desirable. An RC filter could be implemented next to the bolometer which integrates voltage fluctuations occurring on time scales shorter than the frame time.

As a specific example, we consider a 16×16 imaging array of high-T_c bolometers. Since both the readout amplifiers and the bolometers have 1/f noise, we assume the incident radiation is chopped at 60 Hz. This leads to a frame rate of 30 Hz and a thermal time constant $\tau = 3$ ms for each bolometer pixel. The pixels are continuously biased and dissipate roughly $50\mu W$ each. The whole array is read out once while observing the target, and again while observing the chopper blade. The two frames are then digitally subtracted. Assuming one readout amplifier, each pixel is sampled for a maximum time $\tau_{sample} = 11\,\mu sec$. The effective integration time is consequently 256 times less than the observation time of a frame. Electrical noise in the thermometer occurring at higher frequencies than 60 Hz is then aliased across the bandwidth of the readout amplifier. A single-pole low pass filter next to each pixel with a time constant $R_f C = 3$ ms would roll off this high frequency noise before it is aliased.

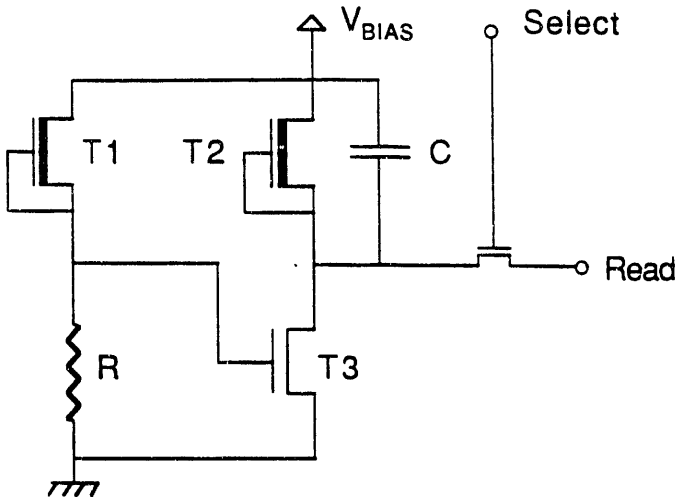

Figure 2. Schematic circuit of a readout for a single pixel in an array. This circuit has both an anti-aliasing filter and some voltage gain to buffer the signal from noise in the "Select" transistor and in the readout amplifier. The power consumption and size of this circuit would allow it to be fabricated on a separate Si wafer and connected to the bolometer array with indium bump bonds.

Figure 2 shows a schematic implementation of a readout circuit for a single pixel in a two dimensional bolometer array. The readout circuit elements could be fabricated on a separate silicon wafer which is bonded to the bolometer array with indium bumps. This circuit has both a low pass filter and voltage gain to buffer the signal from noise in the "Select" transistor. The signal is stored on the capacitor C which is read out at the frame rate by the readout amplifier. The resulting amplifier noise contribution to the NEP is negligible for available readout amplifiers [21].

We have discussed the design of an imaging array of high-T_c Si membrane bolometers which could be useful over wavelengths $30 - 100\,\mu m$. Measurements of electrical noise in YBCO films on Si substrates were used to calculate the sensitivity of transition-edge thermometers. These data and an analysis of the thermal geometry of a bolometer which is diffraction-limited at $\lambda = 100\,\mu m$ predict $D^* = 1.4 \times 10^{10}\,cmHz^{1/2}W^{-1}$ for a single pixel. A readout scheme for an array of bolometers which provides signal integration on the chip has also been described.

REFERENCES

[1] P. L. Richards, J. Clarke, R. Leoni, P. H. Lerch, S. Verghese, M. R. Beasley, T. H. Geballe, R. H. Hammond, P. Rosenthal, and S. R. Spielman, "Feasibility of the high T_c superconducting bolometer," Appl. Phys. Lett., vol.54, pp. 283-285, Jan. 1989.

[2] J. C. Brasunas, S. H. Mosely, B. Lakew, R. H. Ono,

D. G. McDonald, J. A. Beall, J. E. Sauvageau, "Construction and performance of a high-temperature-superconductor composite bolometer," J. Appl. Phys., vol. 66, pp. 4551-4553, Nov. 1989.

[3] J. C. Brasunas, V. Kunde, B. Lakew, S. H. Moseley, " Upcoming planetary missions and the applicability of high temperature superconducting bolometers," SPIE Proceedings vol. 1292, pp. 155-165, 1990.

[4] S. Verghese, P. L. Richards, K. Char, S. A. Sachtjen, "Fabrication of an infrared bolometer with a high-T_c superconducting thermometer," IEEE Trans. Magn., vol. 27, pp. 3077-3080, March 1991.

[5] S. Verghese, P. L. Richards, K. Char, S. A. Sachtjen, "Sensitive bolometers using high-T_c superconducting thermometers for wavelengths $20-300\ \mu$m," submitted to Appl. Phys. Lett.

[6] G. L. Carr, M. Quijada, D. B. Tanner, C. J. Hirschmugl, G. P. Williams, S. Etemad, B. Dutta, F. DeRosa, A. Inam, T. Venkatesan, X. Xi, "Fast bolometric response by high-T_c detectors measured with subnanosecond synchrotron radiation," Appl. Phys. Lett., vol. 57, pp. 2725-2727, Dec. 1990.

[7] M. Nahum, Qing Hu, P. L. Richards, "Fabrication and measurement of high-T_c superconducting microbolometers," IEEE Trans. Magn., vol. 27, pp. 3081-3083, March 1991.

[8] S. Verghese, P. L. Richards, K. Char, D. K. Fork, T. H. Geballe, "Feasibility of infrared imaging arrays using high-T_c superconducting bolometers," J. Appl. Phys., vol. 71, pp. 2491-2498, March 1992.

[9] T. G. Stratton, B. E. Cole, P. W. Kruse, R. A. Wood, K. Beauchamp, T. F. Wang, B. Johnson, and A. M. Goldman, "High-temperature superconducting microbolometer," Appl. Phys. Lett., vol. 57, pp. 99-100, July 1990.

[10] See, for example, the Barnes thermopile detector, EDO Corp., Shelton, Ct.

[11] P. W. Kruse, Private communication.

[12] T. W. Kenny, W. J. Kaiser, S. B. Waltman, J. K. Reynolds, "Novel infrared detector based on tunneling displacement transducer," Appl. Phys. Lett., vol. 59, pp. 1820-1822, Oct. 1991.

[13] See, for example, the P-41 detector, Molectron Corp., Sunnyvale, CA.

[14] J. Clarke, G. I. Hoffer, P. L. Richards, N-H. Yeh, "Superconductive bolometers for submillimeter wavelengths," J. Appl. Phys., vol. 48, pp. 4865-4879, Dec. 1977.

[15] D. K. Fork, D. B. Fenner, R. W. Barton, J. M. Phillips, G. A. N. Connel, J. B. Boyce, T. H. Geballe, "High critical currents in strained epitaxial $YBa_2Cu_3O_{7-\delta}$ on Si," Appl. Phys. Lett. vol. 57, pp. 1161-1163, Sept. 1990.

[16] H. A. Waggener, "Electrochemically Controlled Thinning of Silicon," Bell System Tech. J., vol. 45, 233-253, 1966.

[17] F. Gao, G. L. Carr, C. D. Porter, D. B. Tanner, S. Etemad, T. Venkatesan, A. Inam, B. Dutta, X D. Wu, G. P. Williams, and C. J. Hirschmugl, "Far-infrared transmittance and reflectance studies of oriented $YBa_2Cu_3O_{7-\delta}$ thin films," Phys. Rev. B, vol. 43, pp. 10383-10389, May 1991.

[18] K. Kamaras, S. L. Herr, C. D. Porter, N. Tache, D. B. Tanner, S. Etemad, T. Venkatesan, E. Chase, A. Inam, X. D. Wu, M. S. Hegde, and B. Dutta, "In a clean high-T_c superconductor you do not see the gap," Phys. Rev. Lett., vol. 64, pp. 84-87, Jan. 1990.

[19] Private communication with L. Li at Conductus Inc.

[20] Y. S. Touloukian, *Thermophysical Properties of Matter: Specific Heat of Metallic Elements and Alloys*, New York: IFI/Plenum, 1970.

[21] For example, a differential amplifier with a Toshiba 2SK137 JFET input stage.

END

DATE
FILMED
1 / 13 / 93