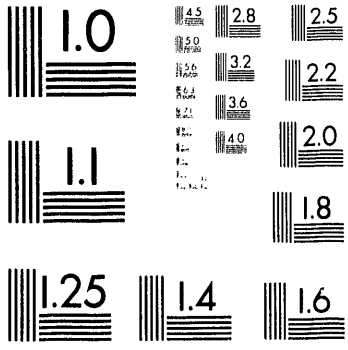
1.0
4.5
2.8
2.5
5.0
3.2
2.2
5.6
6.3
3.6
2.0
4.0
1.1
1.8
1.25
1.4
1.6

1 of 1

Conf-930926--11

UCRL-JC-112764
PREPRINT

Testing of ITER Prototype Cable-in-Conduit Conductors in the FENIX Facility

S.S. Shen, M.R. Chaplin, B. Felker, W.V. Hassenzahl,
K.I. Kishiyama, and J.M. Parker

This paper was prepared for submittal to the
Thirteenth International Conference on Magnet Technology
Victoria, British Columbia, Canada
September 20-24, 1993

September 15, 1993

Lawrence Livermore National Laboratory

This is a preprint of a paper intended for publication in a journal or proceedings. Since changes may be made before publication, this preprint is made available with the understanding that it will not be cited or reproduced without the permission of the author.

MASTER

DISTRIBUTION OF THIS DOCUMENT IS UNLIMITED

DISCLAIMER

This document was prepared as an account of work sponsored by an agency of the United States Government. Neither the United States Government nor the University of California nor any of their employees, makes any warranty, express or implied, or assumes any legal liability or responsibility for the accuracy, completeness, or usefulness of any information, apparatus, product, or process disclosed, or represents that its use would not infringe privately owned rights. Reference herein to any specific commercial products, process, or service by trade name, trademark, manufacturer, or otherwise, does not necessarily constitute or imply its endorsement, recommendation, or favoring by the United States Government or the University of California. The views and opinions of authors expressed herein do not necessarily state or reflect those of the United States Government or the University of California, and shall not be used for advertising or product endorsement purposes.

Testing of ITER Prototype Cable-in-Conduit Conductors in the FENIX Facility

S. S. Shen, M. R. Chaplin, B. Felker, W.V. Hassenzahl, K.I. Kishiyama, J.M. Parker
Lawrence Livermore National Laboratory
P.O. Box 808, L-643
Livermore, CA 94551-9900

***Abstract*—The Fusion ENgineering International eXperiment (FENIX) Test Facility has been operational since 1991 at the Lawrence Livermore National Laboratory for testing the International Thermonuclear Experimental Reactor (ITER) prototype conductors. These conductors are designed to operate stably with transport current of more than 40 kA at a magnetic field of 13 T. The FENIX facility consists of four magnet sets that are configured to allow easy access to the 40-cm high-field region with a test cross-section area of 10 * 15 cm^2. FENIX provides test conditions that closely simulate the ITER magnet operation mode. Performed experiments include measurements of critical current, current-sharing temperature, forced-flow properties, stability, joint performance and cyclic fatigue effects. This paper describes the design and performance of these experiments.**

I. Introduction

The FENIX facility [1], which became operational at the end of 1991, was designed for testing prototype conductors for ITER superconducting magnets [2]. It provides test conditions simulating the ITER magnet operating environment, and most importantly, it also accommodates specific experiments to determine the operation margins for the prototype conductors. The goal of the FENIX Conductor Testing Program is to perform quality assurance testing of ITER conductor and to determine its operational margins. Magnetic field above 14 T and transport current over 50 kA are generated by the FENIX facility. An experimental program that measures critical parameters, current-sharing properties, forced-flow properties, stability margins, joint performance and cyclic fatigue effects is described below.

A. Description of the FENIX Facility

In the current design of the ITER machine, the Nb_3Sn cable-in-conduit conductor (CICC) has been chosen for both the Toroidal Field and Central Solenoid magnet systems. For the ongoing ITER magnet R&D program [2], fabrication and testing of short lengths of such conductors are deemed of prominent importance. The FENIX facility was designed and constructed to meet the urgent needs of the ITER conductor development program. The major operation parameters are listed in Table 1.

TABLE 1
MAJOR PARAMETERS OF FENIX CONDUCTOR TESTS

Maximum field (T)	14
Maximum current (kA)	50
Maximum conductor length (m)	4.7 * 2
Uniform high-field length (m)	0.4
Conductor forced cooling	
Number of paths	2
Inlet pressure (MPa)	0.5 to 2.5
Maximum total flow rate (g/s)	10
Conductor bath cooling	
Bath temperature (K)	4.2 to 4.4

B. Facility Operation

Both the FENIX magnet and test-sample cryogenic systems are operating well and can fully simulate ITER operational conditions. The 14-T magnet system is adequately cooled by a CTI-2800 helium refrigerator with a rated capacity of 300 W. Samples under testing in FENIX are cooled by forced-flow supercritical helium. Room-temperature helium flows to the test well, passes through a counterflow heat exchanger in the upper part of the well, and then passes through a helium bath. Out of the bath, for each leg of the conductor sample, a cooling circuit is provided with a heater to control temperature. Flow returns from each leg to the counterflow heat exchanger and then exits with flow instrumentation and control. The scheme, as shown in Fig. 1, is designed for accurate measurements of flow and temperature in the CICC. More importantly, the temperature and flow of each leg can be separately controlled and measured while operating under nominal test conditions of 50-kA transport current and 14-T steady-state magnetic field.

II. ITER Prototype Conductor Test

A. Samples and Instrumentation Arrangements

Each FENIX sample consists of a pair of straight pieces of CICC that are jointed at the bottom, each leg is connected to the top facility power leads with its termination. Although the transport current flows in series in the two legs, each cooling circuit is independently controlled. Thus, each leg can be tested for its critical parameters separately and independently. A typical sample assembly that measures 6.7 m in length is shown in Fig. 2.

Each sample conductor pair is heavily instrumented with different types of sensors and controls, as shown in the schematic of the instrumentation and control arrangement in Fig. 1.

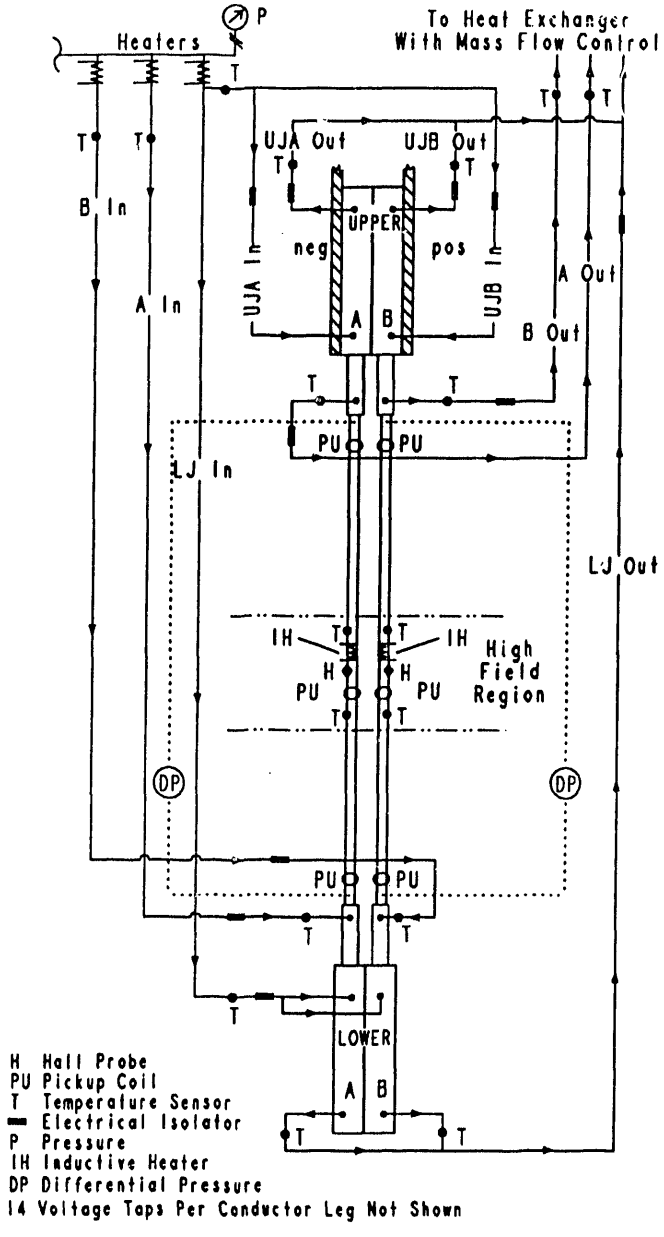

Fig. 1. Schematic of instrumentation and control for typical FENIX conductor test assembly.

B. *Conductor Test Program*

To date, the FENIX facility has tested four sample conductors through the ITER collaboration. The design features of each sample are summarized in Table 2. The instrumentation and control arrangement is shown in Fig. 1. A test program was developed and executed to characterize these samples. The test program not only validated the design parameter but also tested the conductor to the operation limits where current sharing took place. Typical results of three EC samples [3] [4] indicated the effective strain on the strand was about -.55%, which was considerably lower than expected for conductor using stainless steel sheath.

Fig. 2. FENIX conductor test assembly.

III. Specific Experiments

A. *Forced-flow Properties and Measurements of Critical Parameters*

In the CICC configuration, determination of critical current or current-sharing temperature can be made by several methods. In the FENIX facility, the following experiments have been developed and proven to produce consistent results:

1) Liquid-helium cooling: For subscale samples with less current capacity, the facility can provide critical-current measurements at constant field and in helium-bath cooling. Critical currents can be deduced from the conventional V-I curve, assuming the bath-helium temperature is constant. Magneto-resistive effects [5] on CGRs (carbon-glass resistor) can also be measured in this mode of cooling. Such calibration procedure is generally needed for the CGRs installed in the high-field region.

2) Supercritical-helium cooling:

a) At constant magnetic field and transport current, using the heater at the helium inlet, the conductor temperature can be slowly adjusted until a normal zone develops and propagates. A current-sharing curve measured by sample voltage versus conductor temperature can be obtained. The signatures of such effects can be clearly seen on samples of different designs. One such curve is illustrated in Fig. 3 for EC/ITER Sample 3.

b) At constant magnetic field and steady-state conductor

TABLE 2
FENIX/ITER Sample Summary.

Sample Identification	Manufacturer	Cable Composition	Conduit
EC/ITER 1	ABB (Zurich)	Braid 609 0.93-mm strands*	316 LN with longitudinal laser welds
EC/ITER 2	ABB (Zurich)	Triplet-base 567 0.96-mm strands*	316 LN with longitudinal laser welds
EC/ITER 3	EM-LMI	Triplet-base 864 0.78-mm strands*	JK1** seamless tube
JA/ITER 1	Hitachi/Fuji	Hollow/Disk 324 1-mm bronze-process strands 23 2.5-mm bronze-process strands	JN1***/CuNi

* Strands were manufactured by Teledyne Wah-Chang Albany.
** Kobe Steel, Japan.
*** Nippon Steel, Japan.

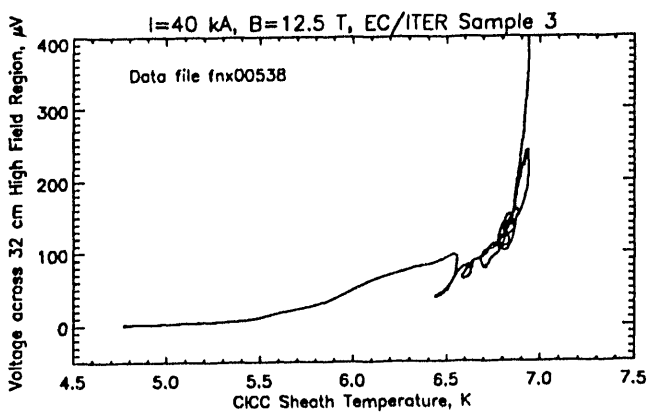

Fig. 3. Current-sharing curve.

temperature, the transport current can be slowly ramped and controlled to measure the current-sharing effects.

c) At constant magnetic field and steady-state conductor temperature, the transport current can be pulsed to measure the ramp-rate effects.

d) At constant magnetic field and transport current, by pulsing the heater at the helium inlet, the normal-zone voltage can be induced and propagated in the high-field region. This technique produces the least thermal disturbance to the facility and can be repeated frequently. One example is shown in Fig. 4, where four heater pulses with increasing temperature produced progressively larger normal-zone voltages and finally quenched the conductor.

B. *Fatigue Effect*

To study the mechanical fatigue effects on the CICC due to the Lorentz force, the facility provides fast current pulse at rates up to 40 kA/s so that a large number of current cycles can be pulsed in a single experiment. In the one test performed on the EC/ITER Sample 3, a total of 6000 current cycles were performed. At 12.5 T, the 40-kA current induced

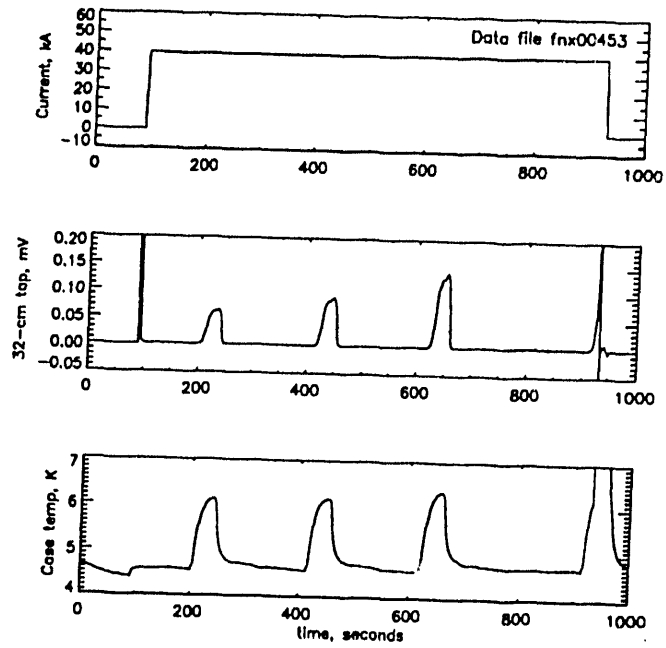

Fig. 4. Heater pulse tests.

transverse stress above 15 MPa on the cable. No degradation in CICC performance was detected in comparing the current-sharing curves before and after the current cycles. In future tests, such experiments will be performed up to 20,000 cycles to meet the ITER operation requirements.

C. *Joint Performance*

Testing the bottom joint that connects the two legs is an integral part of the conductor test program. Generally, such joints are designed to produce minimal dc dissipation so that they will not interfere with the conductor tests. In the FENIX facility, these joints underwent tests with current of different levels and ramp rates. The results of such transient responses provide critical data needed for designing joints for pulse operations. As an example, transient 40-kA test results of the joint in the EC/ITER Sample 3 are illustrated in Fig. 5.

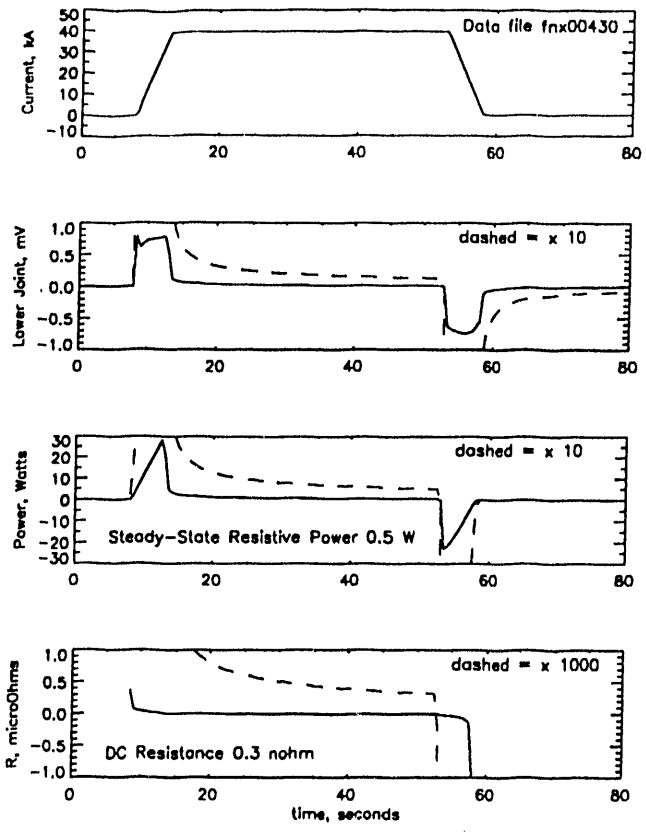

Fig. 5. Joint performance.

D. *Stability Margins and RRR*

One of the major design objectives of the FENIX facility was to provide stability tests for practical CICCs under operating conditions compatible with ITER designs. FENIX has installed an inductive heater power supply for use in such stability tests. In the tests of the JA/ITER sample [6], stability margins were determined for the test conductor with transport current of 40 kA at 12 T. At the FENIX facility, accurate measurements of helium conditions are provided, thus accommodating additional credible calibration of the energy margins. Detailed investigation of the stability margin under different operating conditions will verify the expected performance of several design parameters, such as heat transfer and stabilizer conductivity. For future conductor testing, the stability margin will be measured not only at constant transport current but also during a fast current ramp. Experiments of such dynamic tests may provide an insight into the ramp-rate limits of the CICC.

The inductive heater system was also used to produce normal zones with various lengths at different operating conditions to study the post-quench effects. The conductor stabilizer conductivity, generally measured in RRR (ratio of residual resistivity) values, can also be deduced from the measurements of the normal-zone propagation. The verification of the designed RRR value in the final CICC is a crucial part of the FENIX test program.

IV. Summary

An ITER full-size conductor test program is described. Test results of several ITER conductor samples are summarized. The effect of forced-flow cooling on the performance of such a large CICC is illustrated by current-sharing curves, measured by sample voltage versus temperature. The cyclic-current effects were also studied. No degradation was detected in one of the samples after 6000 current cycles. Also described are the stability tests and measurement of the joint performance. During the Engineering Design Activities Phase of the ITER program, the FENIX facility will continue to function for testing prototype conductors designed for model coils and ITER magnets.

Acknowledgment

This work was performed under the auspices of the U.S. Department of Energy by Lawrence Livermore National Laboratory under Contract W-7405-Eng-48.

References

[1] D.S. Slack, R.E. Patrick and J.R. Miller, "FENIX, a test facility for ITER and other new superconducting magnets," IEEE Trans. MAG. vol. 27, no. 2, pp. 1835-1838, March 1991..

[2] D.B. Montgomery and R.J. Thome, "U.S. perspective on the ITER magnetics R&D program," IEEE Trans. on Applied Superconductivity, vol. 3, no. 1, pp. 342--349, March 1993.

[3] P. Bruzzone et al., "Test results of full-Size 40-kA NET/ITER Conductors in the FENIX test facility," IEEE Trans. on Applied Superconductivity, vol. 3, no. 1, pp. 357-360, March 1993.

[4] S.Shen et al., "High-field conductor testing at the FENIX Facility," Lawrence Livermore National Laboratory report UCRL-JC-113199, April 1993.

[5] L.G. Rubin, B.L. Brandt and H.H. Sample, "Some Practical Solutions to Measurement Problems Encountered at Low Temperatures and High Magnetic Fields," Adv. in Cryog. Eng., vol. 31, p. 1221, 1986.

[6] M. Sugimoto et al.,"Test Result of the FER/ITER Conductors in the FENIX Test Facility," presented at MT-13 Conference, Victoria, Canada, September 1993.

DATE
FILMED
12/28/93

END